Fact Sheets

City of Springfield, Oregon • **Land and Drainage Alteration Program** (LDAP)

Introduction to these Fact Sheets

HERE'S WHAT TO EXPECT

Construction site operators are required by federal, state, and local regulations to get an LDAP before they begin moving dirt at a site.

The permitting process includes some paperwork, an inspection, and specific pollution-prevention plans to be followed during construction.

We're here to help! The City of Springfield created these LDAP Fact Sheets to walk Homeowners, Contractors, and Design Professionals through the LDAP considerations.

REPORT WATER POLLUTION FROM CONSTRUCTION PROJECTS

If you see anything other than rain enter the stormwater system – which includes street gutters, storm drains, and open channels – that is water pollution. It must not be allowed to reach local rivers.

Contact us! We're here to help keep Springfield's water supplies and waterways clean. Our priority is prevention, clean up, and education: ***Springfield's LDAP Program, 541-726-3680, dpw@springfield-or.gov.***

RESOURCES

These pages summarize the minimum requirements for construction projects, as outlined in Springfield's Manuals and Codes. For the full code, see **Chapter 8 of Springfield's Municipal Code**.

LDAP APPLICATION PROCESS:

Determine if you need an LDAP and/or other permits. *(see Fact Sheet 1.0)*

↓

Submit your completed application packet to Springfield's Development & Public Works Department. Packets include the appropriate application and supporting documents such as Erosion & Sediment Control Plans, geotechnical reports, etc. *(see Fact Sheets 1.1 through 1.3)*

↓

Receive your LDAP from the City. If applicable, receive your 1200-C from Oregon DEQ. All permits must be kept on site during construction.

↓

Schedule and have a site inspection with Springfield's Engineering Staff. *(see Fact Sheet 1.4)*

↓

Begin construction, using all control measures from your ESCP and all BMPs. *(see Fact Sheets 2.0 through 2.8)*

↓

Prepare for unannounced inspections from Springfield Staff during construction.

↓

Schedule a final inspection when construction is complete and the site is stabilized. Remove all BMPs after inspection is complete and the permit is closed.

LDAP Permit Process

LAND AND DRAINAGE ALTERATION PROGRAM (**LDAP**)

Do I need an LDAP?

Will the activity result in soil disturbance?

- **No** → No LDAP required, but general water quality outcomes still apply.
- **Yes** ↓

Will the site disturb: 50-cubic-yards or more of soil, 7,000-square-feet or more of soil, or support a structure?

- **No** → No LDAP required, but general water quality outcomes still apply.
- **Yes** ↓

Will the activity disturb an area of five (5) acres or larger?*

- **Yes** → **REGISTRATION REQUIRED,** *under the NPDES 1200-C General Permit through the Oregon Department of Environmental Quality (DEQ).* **and** ↓
- **No** ↓

Does the site contain any of the following?

- *Drainageway or Swale.*
- *15% Slopes or inclusion in a Hillside Overlay District.*
- *Wetland.*
- *Flood plain.*
- *Commercial, Industrial, or Multi-unit Residential Development.*

- **Yes** → **LDAP PERMIT REQUIRED.** *Obtain an application and a standard notes fact sheet. Available at City Hall, Public Works Department's front counter. 1200-CN coverage automatically applied to sites that disturb between one and five acres.*
- **No** ↓

SHORT FORM LDAP PERMIT REQUIRED.

*Obtain a Short Form LDAP application from **bit.ly/springfieldLDAP** or from the Development Center's front counter at Springfield City Hall. This permit is issued over the counter.*

National Pollutant Discharge Elimination System (NPDES) registration with Oregon DEQ is required for sites that exceed one acre of disturbance. The **1200-CN General Permit issued by Oregon DEQ provides automatic coverage for sites that obtain and maintain a valid LDAP for sites that disturb one to five acres.*

About Springfield's LDAP

To protect local waterways, all construction sites located in Springfield that disturb land are required to comply with grading, public safety, and water quality standards as specified in Springfield's Municipal Code (SMC), Chapter 8.

All sites are required to protect water quality; however, not all sites will be required to obtain a Land & Drainage Alteration Permit (LDAP). Sites that are exempted from LDAP permitting are still required to meet the general water quality outcomes required of permitted sites as listed in SMC 8.408.

What is affected?

All construction activities that result in land disturbance or that otherwise negatively impact stormwater quality are affected. Construction activities that do not disturb the land such as interior remodeling and emergency-related circumstances such as those caused by floods and fires are excluded.

What are examples of land-disturbing activities?

Examples of land disturbance include, but are not limited to grading, grubbing, logging, excavating or filling.

Are permits required?

Grading activities that are intended to support a structure are required to obtain an LDAP prior to any ground disturbance. All other grading activity will require an LDAP unless all applicable exemptions are met (Springfield Municipal Code 8.412).

Fact sheets on Best Management Practices (BMPs) are available at the City Hall Public Works front counter.

What does the LDAP require?

All LDAP submittals require a plan for managing stormwater runoff from the proposed construction site. A standard LDAP requires a site plan that illustrates the BMPs that will be used to control runoff, prevent erosion and sedimentation, and protect public waterways from pollutants. Sites that meet

CONTINUED >>>

specific criteria are eligible for issuance of a Short Form LDAP that is issued over the counter and includes a standardized plan for addressing these items.

Are there special qualifications to prepare these plans?

LDAP site plans for single family dwellings may be prepared by the owner or applicant. Plan templates are available to aid applicants in designing a site plan for projects that do not qualify for a Short Form LDAP.

Multifamily, commercial, and industrial projects require submittal of an LDAP packet prepared by a qualified design professional. This may include: civil engineers, environmental engineers, landscape architects, geologists, or Certified Professionals in Erosion and Sediment Control (CPESC), or any other qualified person determined by the Director.

Are fees required?

Yes, the amount varies depending on the type of permit and the size of the disturbance. Please refer to the City of Springfield Master Fees & Charges Schedule on the City of Springfield website for current fees.

Why do construction sites matter?

The City's stormwater system consists of open channels, creeks, wetlands, and pipes that carry untreated runoff to the McKenzie and Willamette Rivers. Construction activities can cause erosion and sedimentation which reduces the capacity of the stormwater system to convey water away from homes and businesses and reduces water quality. This may lead to impaired drainage and flooding, polluted drinking water sources, impaired water quality that is detrimental to aquatic life, and an overall reduction of other beneficial uses.

What are examples of stormwater pollutants?

Anything other than rain that enters the stormwater system is considered a pollutant. This includes soil sediment, fertilizer, paint, solvents, concrete slurry, organic debris, and any other solid or liquid waste product.

Springfield Stormwater

Stormwater is rain that washes over the city, into the stormwater system, and out to local waterways. It is also sometimes called runoff or urban runoff.

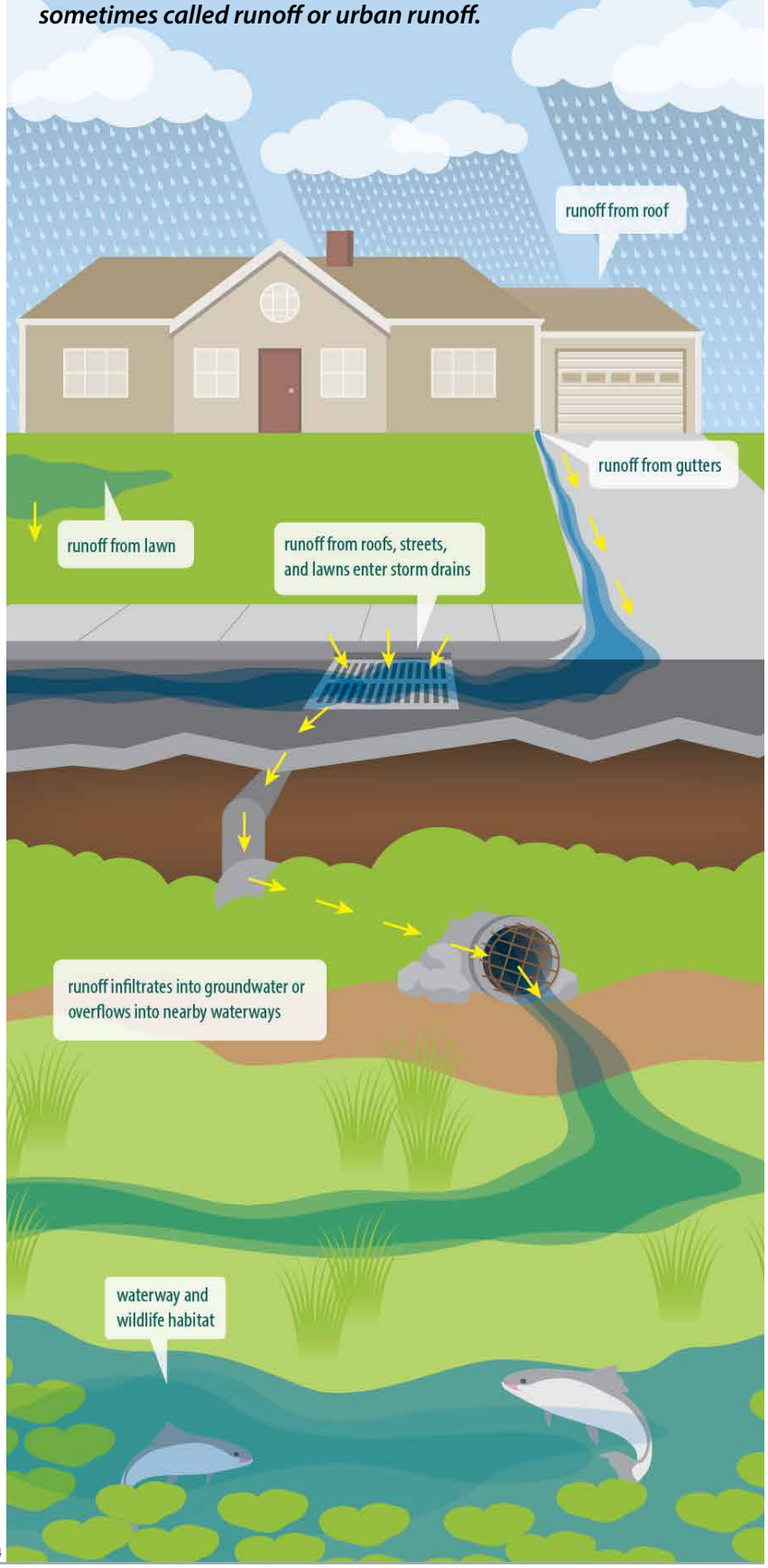

Updated March 2024

Minimum Requirements Checklist

LAND AND DRAINAGE ALTERATION PROGRAM (**LDAP**)

Cover the basics

To reduce stormwater pollution, construction site operators are required to have an Erosion and Sediment Control Plan (ESCP) and implement it from the initial clearing through final site stabilization.

At a minimum, your plan must address each of the following. Please use this list to ensure your ESCP is on track. See Fact Sheet 1.2 for sample ESCPs.

You'll submit your completed ESCP to the City as either one digital set (preferred) or one printed set.

Checklist for your Erosion Sediment Control Plan (ESCP)

- ❑ Site location and vicinity map.
- ❑ A site development drawing containing the following:
  - ❍ Soil types and areas subject to flooding or landslides (include 100 year floodplain boundaries).
  - ❍ Existing and proposed contour lines.
  - ❍ Property lines, easements and north arrow.
  - ❍ Building pad floor elevations and retaining walls.
  - ❍ Foundation type and foundation drains.
  - ❍ Identify threatened or endangered species habitat (if applicable).
  - ❍ Surface drainage patterns, riparian areas, top of bank and wetlands.
  - ❍ Existing vegetation type and trees over 5 inches in DBH and greater.
- ❑ Delineate areas where ground clearing or ground disturbing activities are prohibited such as but not limited to conservation zones, wetlands, public or private drainage easements, open waterways, natural resource sites, buffer areas, roadside ditches, water features and other protected areas.
- ❑ Identify measures which will be implemented to physically protect areas where ground disturbance is prohibited.
- ❑ Show measures for preventing, and/or controlling erosion, sedimentation and other pollutants into the City's stormwater system and related natural resources.
- ❑ Vegetation specifications for temporary and permanent stabilization (include a planting plan).
- ❑ Locations of vegetated stormwater treatment facilities including plans, planting schedules, cross sections, and details in accordance with an approved development plan.
- ❑ Access for all vehicles including:
  - ❍ Areas where a construction entrance/exit will be constructed.
  - ❍ Location of vehicle's wheel wash area (if applicable).
- ❑ Locations of all storm drainage facilities, such as but not limited to catch basins, curb inlets, ditches, and outfalls.
- ❑ Disposal locations and methods of containment for the following:
  - ❍ Debris and Garbage
  - ❍ Stockpiles
  - ❍ Concrete Wash Out
- ❑ If a geotechnical report is attached, reference it on the site plan.
- ❑ Construction schedule. If the construction schedule is to be provided by the contractor, note that in your Control Plan. The schedule must include:
  - ❍ Haul routes
  - ❍ Schedule construction

LDAP STANDARD NOTES

1. Prior to any ground disturbance on the site one inspection with LDAP staff is required. Issuance of this plan does not relieve the permit holder and or the contractor from all other permitting requirements. Prior to beginning construction activities, all other necessary approvals shall be obtained.

2. The erosion and sediment control measures shown on the plan are the minimum requirements for anticipated site conditions. During the construction period, these measures shall be upgraded as needed for unexpected storm events and to ensure that sediment and sediment-laden water does not leave the site.

3. The implementation of the ESCP and the construction, maintenance, replacement, and upgrading of the erosion and sediment control measures is the responsibility of the permit holder and or the contractor until all construction is completed and accepted and vegetation / landscaping is established.

4. The boundaries of the clearing limits shown on this plan shall be clearly flagged in the field by the engineer prior to construction. During the construction period, no disturbance beyond the flagged clearing limits shall be permitted. The flagging shall be maintained by the permit holder and or the contractor for the duration of construction.

5. The erosion and sediment control measures on active sites shall be inspected and maintained daily and within the 24 hours after any storm event of greater than 0.5 inches of rain per 24 hour period. Measures shall be inspected by the permit holder and or the contractor after each rainfall and at least daily during prolonged rainfall. Any required repairs or adjustments shall be made immediately. The erosion and sediment control measures on inactive sites shall be inspected a minimum of once every two (2) weeks or within 48 hours following a storm event.

6. All erosion and sediment control measures shall be protected from damage at all times. Control measures shall remain in place until permanent re-vegetation has been stabilized. Any measure that is damaged or destroyed shall be repaired or replaced immediately.

7. Any areas of exposed soils, including roadway embankments, that will not be disturbed for two days during the wet season (October 1 to April 30) or seven days during the dry season (May 1 to September 30) shall be immediately stabilized with an approved ESC method (seeding & mulching with straw, bark, compost, or plastic covering, ect.).

8. Street sweeping shall be performed as needed or when directed by the City inspector to insure public right-of-ways are kept clean and free of debris. Street flushing is prohibited.

9. When trucking saturated soils from the site, either water-tight trucks shall be used or loads shall be drained on site until dripping has been reduced to no more than one gallon per hour. Sediment laden water will not be allowed to enter the storm water system

10. Extracted ground water from excavated trenches shall be disposed of in a suitable manner without damage to adjacent property, City's storm water system, water features, and related natural resources. Approval of a dewatering system does not guarantee that it will meet compliance or be acceptable for use in all situations. Modifications to the dewatering system will be required if compliance can not be met. At no time will sediment laden water be allowed to leave the construction site.

11. A supply of materials necessary to meet compliance and implement the LDAP or other best management erosion practices under all weather conditions shall be maintained at all times on the construction site.

12.No hazardous substances, such as paints, thinners, fuels and other chemicals shall be released onto the site, adjacent properties, or into water features, the City's storm water system, or related natural resources.

13.The ESC facilities shall be inspected daily by the contractor and maintained to ensure continued proper functioning. Written records shall be kept of weekly reviews of the ESC facilities during the wet season (October 1 to April 30) and of monthly reviews during the dry season (May1 to September 30).

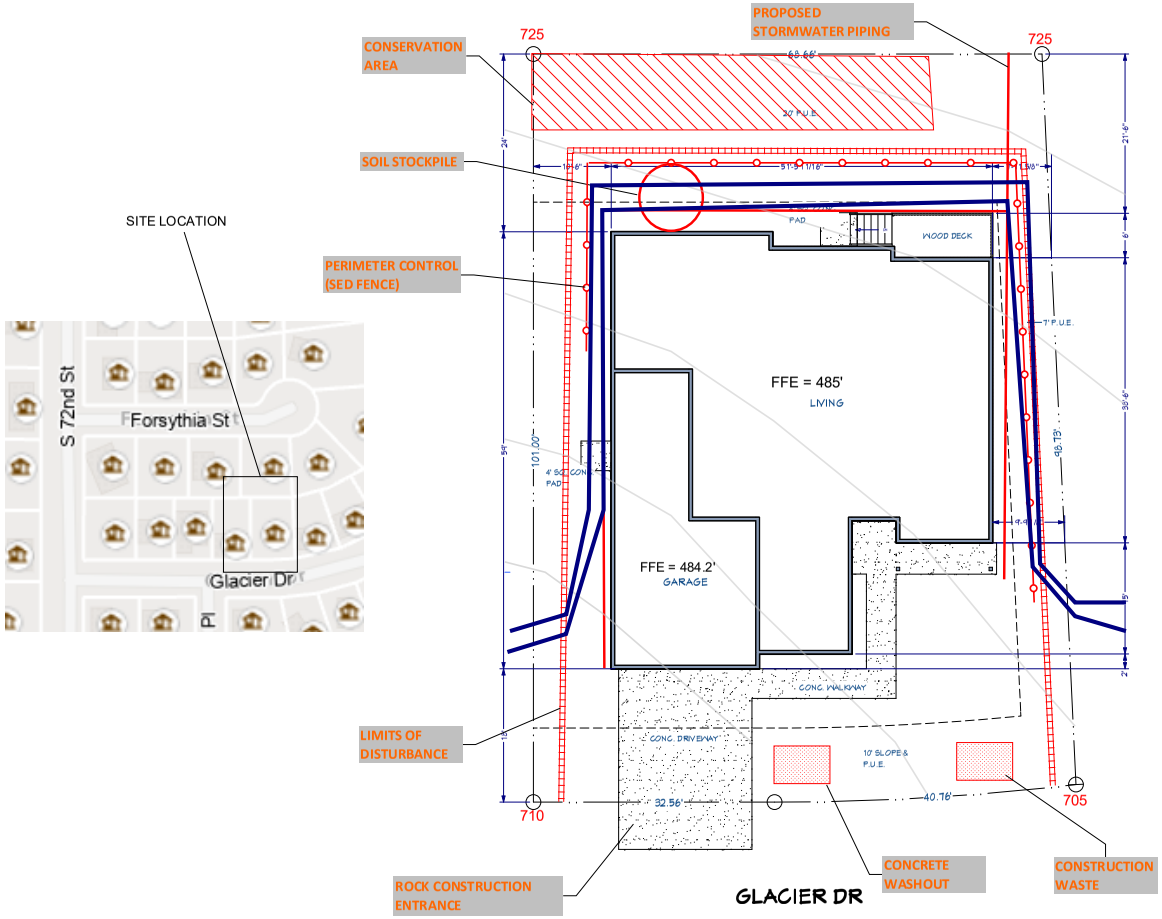

EXISTING CONTROUR

PROPOSED CONTOUR

PROPOSED RESIDENCE
ON LOT 75
McKENZIE HILLS 1st ADD
SPRINGFIELD, OR

REVISION:	BY:	DATE:
ORIGINAL	DD	02/17

36_24_title_block

GLACIER ST.

SITE PLAN

SCALE: 1/8"=1'-0"

1

Actual page size: 36" Wide X 24" Tall

Sample 2 of 2: Erosion Sediment Control Plan (ESCP)

LDAP STANDARD NOTES:

1. Prior to any ground disturbance on the site one inspection with LDAP staff is required. Issuance of this plan does not relieve the permit holder and or the contractor from all other permitting requirements. Prior to beginning construction activities, all other necessary approvals shall be obtained.

2. The erosion and sediment control measures shown on the plan are the minimum requirements for anticipated site conditions. During the construction period, these measures shall be upgraded as needed for unexpected storm events and to ensure that sediment and sediment-laden water does not leave the site.

3. The implementation of the ESCP and the construction, maintenance, replacement, and upgrading of the erosion and sediment control measures is the responsibility of the permit holder and or the contractor until all construction is completed and accepted and vegetation / landscaping is established.

4. The boundaries of the clearing limits shown on this plan shall be clearly flagged in the field by the engineer prior to construction. During the construction period, no disturbance beyond the flagged clearing limits shall be permitted. The flagging shall be maintained by the permit holder and or the contractor for the duration of construction.

7. Any areas of exposed soils, including roadway embankments, that will not be disturbed for two days during the wet season (October 1 to April 30) or seven days during the dry season (May 1 to September 30) shall be immediately stabilized with an approved ESC method (seeding & mulching with straw, bark, compost, or plastic covering, ect.).

8. Street sweeping shall be performed as needed or when directed by the City inspector to insure public right-ofways are kept clean and free of debris. Street flushing is prohibited.

9. When trucking saturated soils from the site, either water-tight trucks shall be used or loads shall be drained on site until dripping has been reduced to no more than one gallon per hour. Sediment laden water will not be allowed to enter the storm water system

10. Extracted ground water from excavated trenches shall be disposed of in a suitable manner without damage to adjacent property, City's storm water system, water features, and related natural resources. Approval of a dewatering system does not guarantee that it will meet compliance or be acceptable for use in all situations. Modifications to the dewatering system will be required if compliance can not be met. At no time will sediment laden water be allowed to leave the construction site.

11. A supply of materials necessary to meet compliance and implement the LDAP or other best management erosion practices under all weather conditions shall be maintained at all times on the construction site.

12. No hazardous substances, such as paints, thinners, fuels and other chemicals shall be released onto the site, adjacent properties, or into water features, the City's storm water system, or related natural resources.

13. The ESC facilities shall be inspected daily by the contractor and maintained to ensure continued proper functioning. Written records shall be kept of weekly reviews of the ESC facilities during the wet season (October 1 to April 30) and of monthly reviews during the dry season (May1 to September 30).

GENERAL SITE INFORMATION

1. TYPE OF DEVELOPMENT: LOW-DENSITY RESIDENTIAL
2. CONSTRUCTION ACTIVITY WILL CONSIST OF:
   - PRIVATE GRAVEL DRIVEWAY AND FOOTINGS
   - PRIVATE WASTEWATER, WATER, AND STORM DRAINAGE SYSTEMS.
3. PROPOSED CONSTRUCTION SCHEDULE:
   BEGINNING DATE: OCTOBER 2021
   COMPLETION DATE: FEBRUARY 2022
4. DEVELOPMENT AREAS:
   TOTAL AREA: 0.73 ACRES (31,743 SF)
   PERCENT OF SITE DISTURBED: 58%
   CUT = 312 CU. YD. OF EXISTING ONSITE MATERIAL
   FILL = 1798 CU. YD. OF EXISTING ONSITE MATERIAL
5. SOIL TYPE: HAZELAIR SILTY CLAY LOAM #52D, HSG D. AND URBAN LAND HAZELAIR-DIXONVILLE COMPLEX 3127C, HSG D.

GENERAL NOTES:

1. ALL EXPOSED SOILS DISTURBED DURING CONSTRUCTION SHALL BE STRAWED AND HYDROSEEDED UPON COMPLETION OF CONSTRUCTION.
2. EXISTING GROUND SURFACE IS MAINLY GRASS COVERED WITH GRAVEL DRIVEWAY.
3. PLANTERS SHALL BE PLANTED PER THE APPROVED BUILDING PERMIT PLANS.
4. CONTRACTOR SHALL INDICATE HAUL ROUTES AND CONSTRUCTION SCHEDULE TO CITY STAFF AT LDAP PRE-CONSTRUCTION MEETING.

CONSTRUCTION NOTES

175. CONSTRUCT CRUSHED ROCK ACCESS PAD. PROVIDE 6" MINIMUM DEPTH 2"-3" CRUSHED ROCK COMPACTED TO 90% MAXIMUM DENSITY. PAD SHALL BE 20' MIN WIDTH BY 50' LONG.

176. CONSTRUCT SEDIMENTATION CONTROL SILT FENCING PER DETAIL. REFER TO SHEET EC-1.0

177. CONSTRUCT SEDIMENTATION CONTROL STRAW WATTLE PER DETAIL. REFER TO SHEET EC-1.0.

178. CONSTRUCT CONCRETE WASHOUT AREA AS PER DETAIL. REFER TO SHEET EC-1.0

N

SCALE: 1"=20'

20' 0 20' 40'

LEGEND

- ASPHALT SURFACE
- CONCRETE RETAINING WALL
- FILL SLOPE
- GRAVEL PARKING
- PROPOSED DRAINAGE PATTERN
- 505 EXISTING MAJOR CONTOUR
- 503 EXISTING MINOR CONTOUR

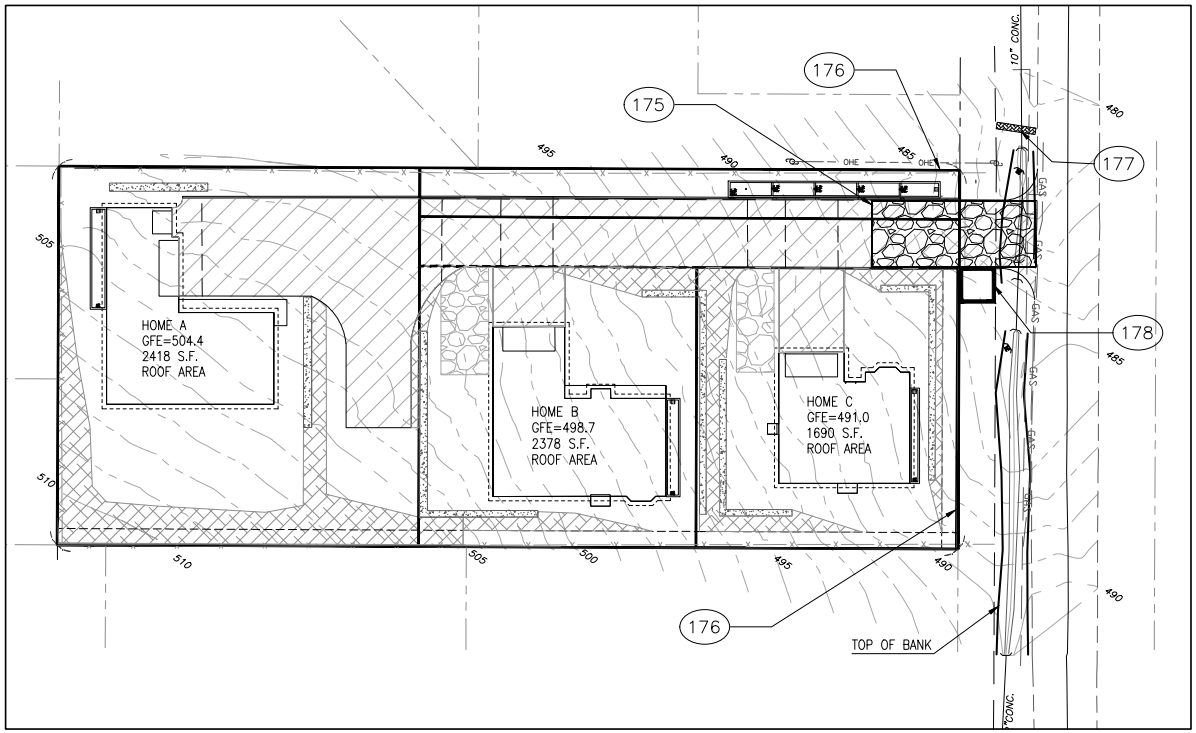

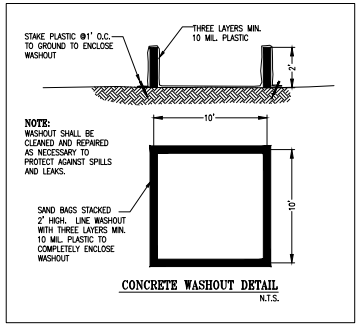

CONCRETE WASHOUT DETAIL
N.T.S.

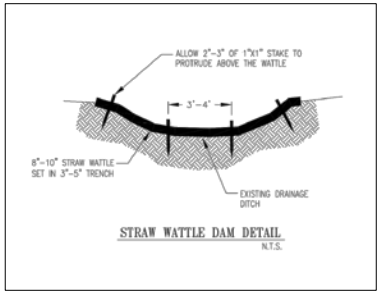

STRAW WATTLE DAM DETAIL
N.T.S.

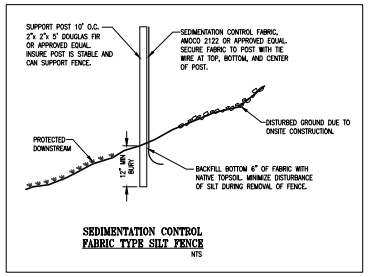

SEDIMENTATION CONTROL FABRIC TYPE SILT FENCE
NTS

Actual page size: 36" Wide X 24" Tall

LDAP Standard Notes

LAND AND DRAINAGE ALTERATION PROGRAM (**LDAP**)

To be included on plan:

1) Prior to any ground disturbance on the site one inspection with LDAP staff is required. Issuance of this plan does not relieve the permit holder and/or the contractor from all other permitting requirements. Prior to beginning construction activities, all other necessary approvals shall be obtained.

2) The erosion and sediment control measures shown on the plan are the minimum requirements for anticipated site conditions. During the construction period, these measures shall be upgraded as needed for unexpected storm events and to ensure that sediment and sediment-laden water does not leave the site.

3) The implementation of the ESCP and the construction, maintenance, replacement, and upgrading of the erosion and sediment control measures is the responsibility of the permit holder and/or the contractor until all construction is completed and accepted and vegetation/landscaping is established.

4) The boundaries of the clearing limits shown on this plan shall be clearly flagged in the field by the engineer prior to construction. During the construction period, no disturbance beyond the flagged clearing limits shall be permitted. The flagging shall be maintained by the permit holder and/or the contractor for the duration of construction.

5) The erosion and sediment control measures on active sites shall be inspected and maintained daily and within the 24 hours after any storm event of greater than 0.5 inches of rain per 24 hour period. Measures shall be inspected by the permit holder and/or the contractor after each rainfall and at least daily during prolonged rainfall. Any required repairs or adjustments shall be made immediately. The erosion and sediment control measures on inactive sites shall be inspected a minimum of once every two (2) weeks or within 48 hours following a storm event.

6) All erosion and sediment control measures shall be protected from damage at all times. Control measures shall remain in place until permanent re-vegetation has been stabilized. Any measure that is damaged or destroyed shall be repaired or replaced immediately.

7) Any areas of exposed soils, including roadway embankments, that will not be disturbed for two days during the wet season (October 1 to April 30) or seven days during the dry season (May 1 to September 30) shall be immediately stabilized with an approved ESC method (seeding and mulching with straw, bark, compost, or plastic covering, etc.).

8) Street sweeping shall be performed as needed or when directed by the City Inspector to ensure public right-of-ways are kept clean and free of debris. Street flushing is prohibited.

9) When trucking saturated soils from the site, water-tight trucks shall be used or loads shall be drained on site until dripping has been reduced to no more than one gallon per hour. Sediment laden water will not be allowed to enter the stormwater system.

10) Extracted groundwater from excavated trenches shall be disposed of in a suitable manner without damage to adjacent property, the City's stormwater system, water features, or related natural resources. Approval of a dewatering system does not guarantee that it will meet compliance or be acceptable for use in all situations. Modifications to the dewatering system will be required if compliance cannot be met. At no time will sediment laden water be allowed to leave the construction site.

11) A supply of materials necessary to meet compliance and implement the LDAP or other best management erosion practices under all weather conditions shall be maintained at all times on the construction site.

12) No hazardous substances such as paints, thinners, fuels and other chemicals shall be released onto the permit site, adjacent properties, or into water features such as the City's stormwater system and other related natural resources.

13) The ESC facilities shall be inspected daily by the contractor and maintained to ensure continued proper functioning. Written records shall be kept of weekly reviews of the ESC facilities during the wet season (October 15th to May 1st) and of monthly reviews during the dry season (May 2nd to October 14th).

Getting ready for your inspection

LAND AND DRAINAGE ALTERATION PROGRAM (**LDAP**)

About inspections

The Land and Drainage Alteration Program (LDAP) requires all permitted sites to undergo an inspection prior to earth moving activity to determine if the prescribed control measures are properly installed.

These control measures, or Best Management Practices (BMPs), are key components of the Erosion and Sediment Control Plan (ESCP) approved with each LDAP, and proper installation is critical to the success of each plan. This page helps you prepare for your LDAP inspection.

All sites are required to protect water quality; however, not all sites will be required to obtain a Land & Drainage Alteration Permit (LDAP). Sites that are exempted from LDAP permitting are still required to meet the general water quality outcomes required of permitted sites.

1) BEFORE REQUESTING AN INSPECTION

Prior to an initial LDAP inspection, this permit only authorizes installation of the BMPs as approved on the plan set. Each BMP must be installed correctly for the inspection to pass. A correction noticed will be issued if BPMs are absent or installed incorrectly at the time of inspection and an additional inspection will then need to be scheduled. The permit placard is required to be posted at the construction site in a location visible from the street.

2) YOU'RE READY

When you have installed all BMPs and you are ready for your inspection, call the IVR inspection line and use the unique IVR number to schedule your inspection. These numbers are provided on your permit. You may also text the word "schedule" to the same number to schedule by text message. Additionally, you may schedule via mobile devices using the Oregon ePermitting app.

3) ASSISTANCE IS AVAILABLE

LDAP staff members can help you prepare for your initial inspection. Additional fact sheets and manuals are available to assist in the correct installation of BMPs. Staff are happy to arrange a pre-construction meeting to discuss the approved plan and the correct installation of all measures to help ensure that your inspection is successful. Reach staff by phone on weekdays between 8:00 a.m. to 5:00 p.m. at 541-726-5931 or 541-736-1037. You may also visit the Development and Public Works counter at Springfield City Hall if you wish to speak in person. Counter hours are weekdays between 8:00 a.m. to 12:00 and 1:00 p.m. to 4:00 p.m.

Residential Construction Entrance/Exit

Protect adjoining roads and waterways from vehicular tracking of sediment off of the site.

INSTALLATION STEPS:

1) Install as soon as vehicle traffic will be entering and exiting the site.

2) Install geotextile fabric over subgrade prior to placing crushed rock.

3) Use ¾ minus clean rock or larger.

4) Construct entrance a minimum of 20 feet wide and extend from the roadway to the foundation or a minimum of 20′.

5) Maintain a minimum 8″ rock depth. Monitor for tracking of sediment offsite and make corrections as necessary.

For more BMP examples, see Springfield's "Engineering Design Standards and Procedures Manual" Chapter 8.

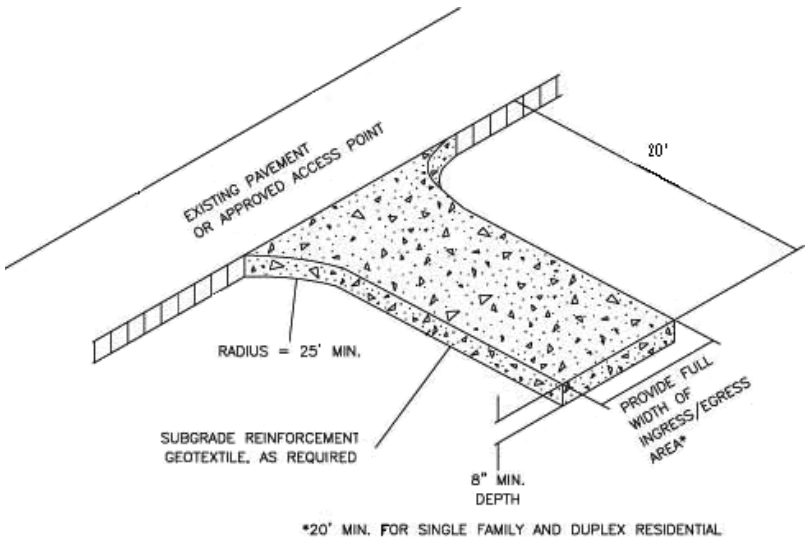

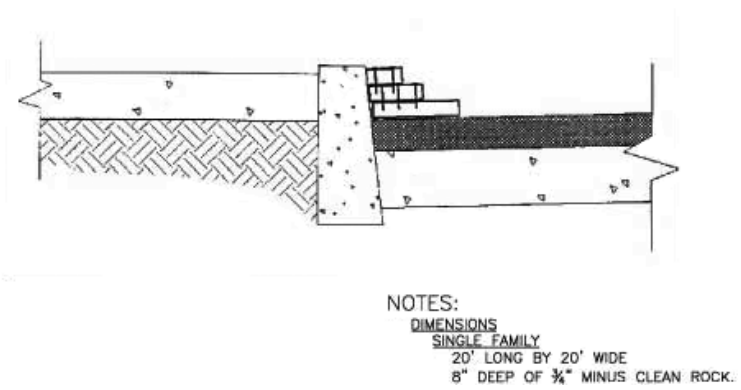

Excavated Sidewalk

To provide storage and filtration from site runoff.

INSTALLATION STEPS:

1) Install prior to site grading.

2) Excavate 6 inches in depth and 5 feet in width.

3) Install a two-inch layer of crushed rock over subgrade.

4) For steeper slopes, excavated sidewalks may be used in conjunction with additional sediment control measures placed uphill from the excavation. Examples may include straw wattles, compost berms, or gravel filter berms.

5) Refer to building permit for pedestrian traffic control measures that will be required while excavation is open.

For more BMP examples, see Springfield's "Engineering Design Standards and Procedures Manual" Chapter 8.

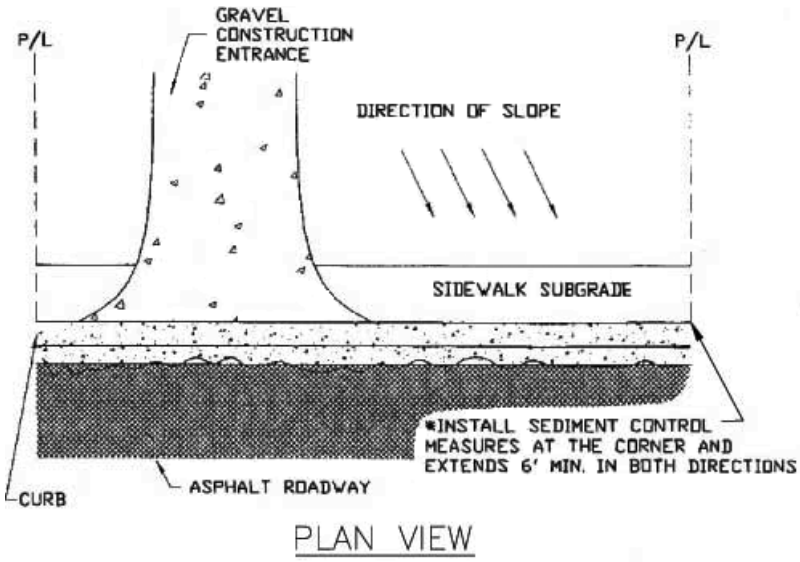

PLAN VIEW

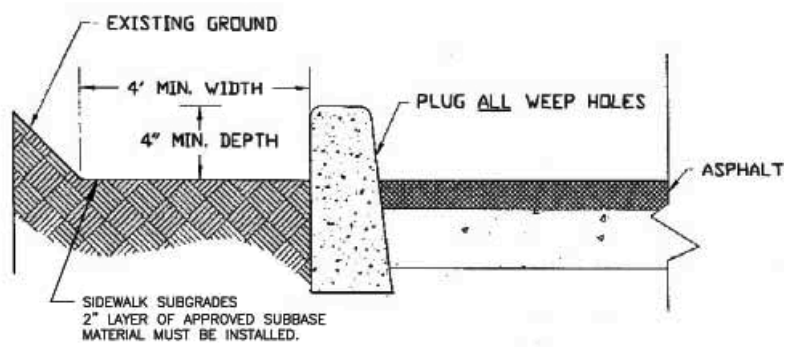

PROFILE

Soil Coverage

To reduce runoff and erosion; conserve moisture, prevent surface compaction; to control undesirable vegetation; to increase biological activity in the soil.

INSTALLATION STEPS:

For temporary protection of critical areas, this standard applies to grades or cleared areas which may be subject to erosion for six months or less and where seeding may not have adequate time to establish prior to erosive conditions.

Site Preparation:

1) Grade in a manner that will permit the use of equipment for applying and anchoring mulch.

2) Install erosion prevention measures prior to grading to prevent sediment from leaving the site. Measures may include dikes, diversions, berms, terraces and sediment barriers.

3) Loosen compact soil to a minimum depth of 3".

Examples of Recommended Soil Coverage:

- **Dry straw or hay** spread over exposed soil at a rate of two (2) to three (3) tons per acre.
- **Wood waste, chips, sawdust, or mulch** spread two (2) to three (3) inches in depth.
- **Hydro-seeding** (slopes 1:1.5 or flatter) apply at a rate of one (1) ton per acre based on dry fiber weight.
- **Erosion prevention matting or netting** such as excelsior, coconut woven, textile, or plastic matting applied in accordance with manufacturer's recommendations.
- **Polyethylene film** secured over banks or stockpiled soil material for temporary protection.

Applying and Anchoring Mulch:

1) Apply straw or hay mulch uniformly by hand or mechanically. Anchor as needed.

2) Spread mulch (bark, compost, wood chips) uniformly on slopes that are 3:1 and flatter. No anchoring needed. Apply at a minimum of two (2) to three (3) inches in thickness.

3) For commercial matting and netting, please refer to manufacturer specifications.






Sediment Fence

Slows sheet flows from a site and catches large sediment particles. Use for light flows.

INSTALLATION STEPS:

1) Excavate a trench two (2) inches in width and six (6) inches in depth parallel to the slope contour and perpendicular to flow.

2) Stake the sediment fence on the downhill side of the trench and extend a minimum of six (6) inches of fabric below grade.

3) To join two sections of fence, overlap the stakes and twist in two full rotations to create a solid joint.

4) Backfill the trench on the uphill side of the fence and compact the trenched area.

For more BMP examples, see Springfield's "Engineering Design Standards and Procedures Manual" Chapter 8.

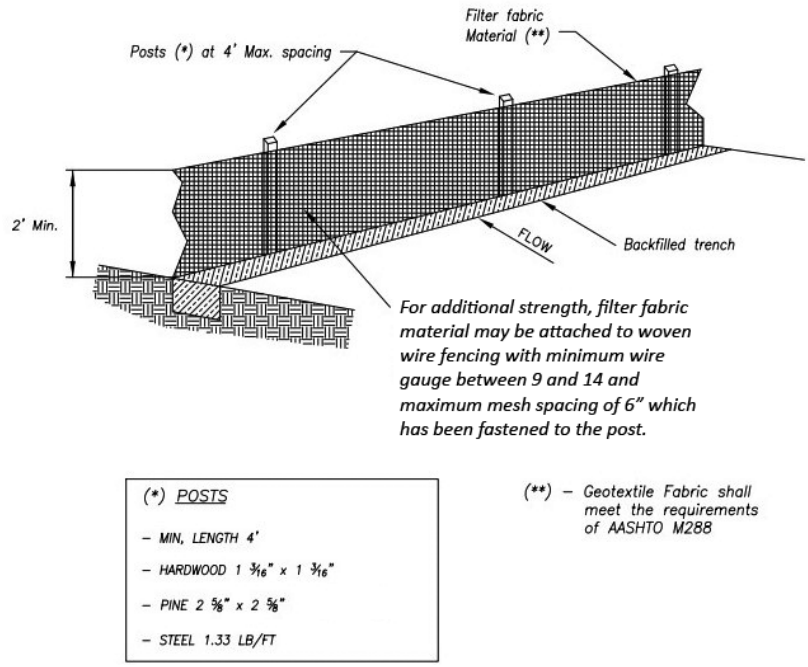

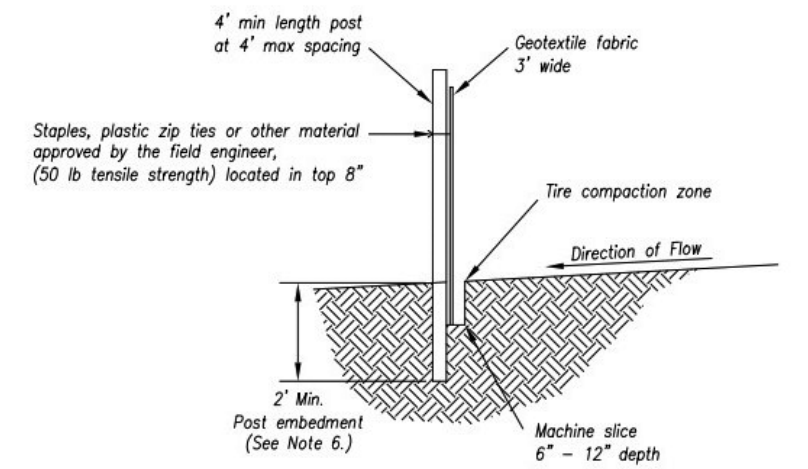

Compost Berm

Slows sheet flows from a site and catches large sediment particles. Use for light flows. Offers low maintenance alternative to sediment fence.

INSTALLATION STEPS:

1) Compost Berms may be placed around the perimeter of an affected area if the area is flat or the perimeter is on contour. Berms and socks should be placed using 'smiles' and j-hooks. Do not place berms and socks where they cannot pond water.

2) No trenching is required for installation; therefore, berms may be installed on frozen or rocky ground.

3) Do not use compost berms and socks in areas of concentrated flow, as they are intended to control and filter sheet flow only.

4) Proprietary installation may be available from the product provider. Berm may be left in place to incorporate into the natural landscape at the conclusion of a project.

For more BMP examples, see Springfield's "Engineering Design Standards and Procedures Manual" Chapter 8.

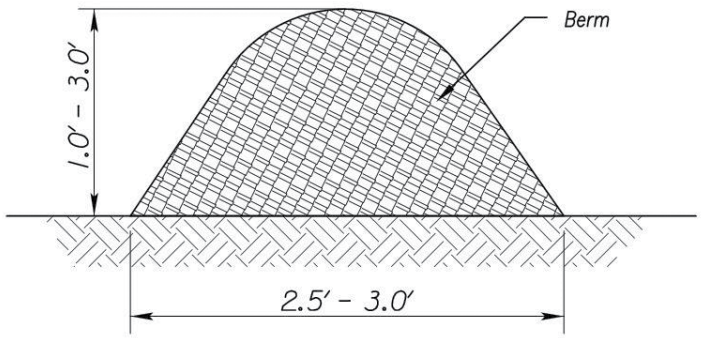

Figure 1
Perimeter Control Installation

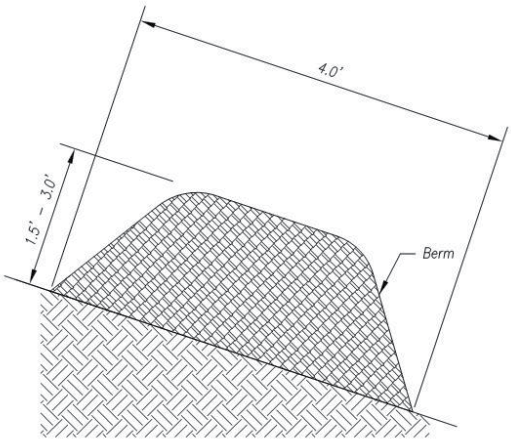

Figure 2
Steep Slope Installation

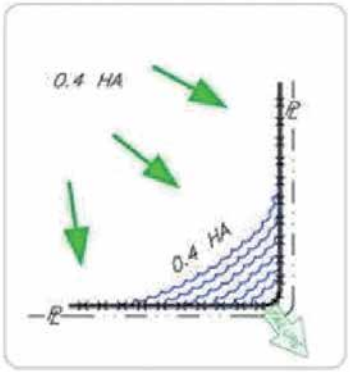

Incorrect – Do not layout "perimeter control" compost berms along property lines. All sediment laden runoff will concentrate and overwhelm the system.

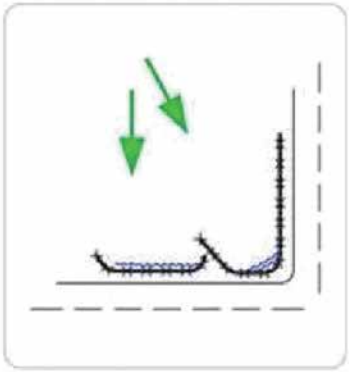

Correct – Install J-hooks

Sediment: Straw Wattle

Temporary slope stabilization that reduces soil creep, sheet flow, and rill erosion on exposed slopes. Not intended for concentrated flow.

INSTALLATION STEPS

1) Dig small trenches across the slope on contour. The trench should be deep enough to accommodate half the thickness of the roll. When the soil is loose and un-compacted, the trench should be deep enough to bury the roll 1/3 of its thickness to account for ground settlement.

2) Start building trenches and installing rolls from the bottom of the slope, working uphill.

3) Construct trenches at contour intervals 25-30 feet (8-10 m) apart depending on slope steepness. Steeper slopes require closer spacing of trenches.

4) Lay the roll along the trenches fitting it snugly against the soil. Make sure no gaps exist between the soil and the straw wattle.

5) Use a straight bar to drive holes through the roll and into the soil for the willow or wooden stakes.

6) Drive the stake through the prepared hole, and into the soil. Leave only 1 or 2 inches (25 or 51 mm) of the stake exposed above roll.

7) Install stakes at least every 4 feet (1.2 m) apart along the length of the wattle. Additional stakes may be driven on the downslope side of the trenches on highly erosive or very steep slopes.

For more BMP examples, see Springfield's "Engineering Design Standards and Procedures Manual" Chapter 8.

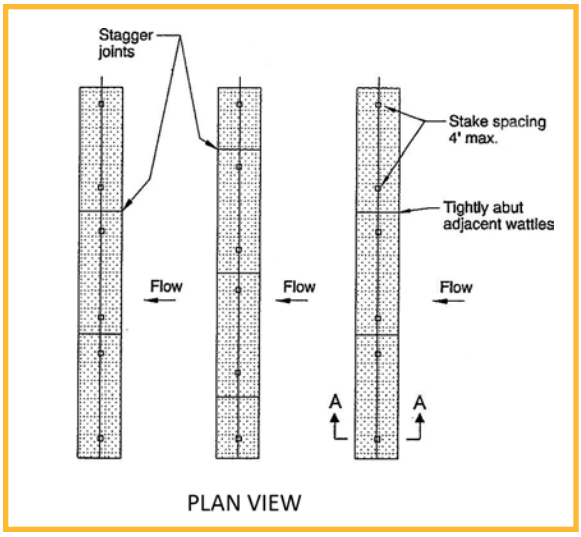

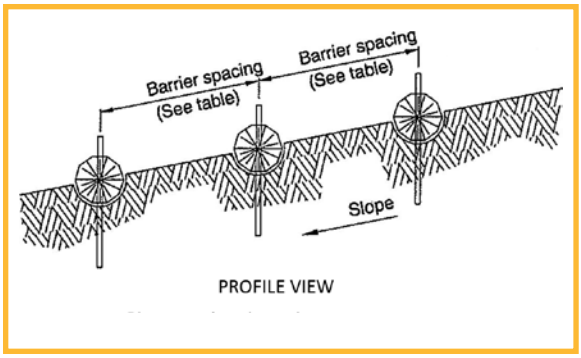

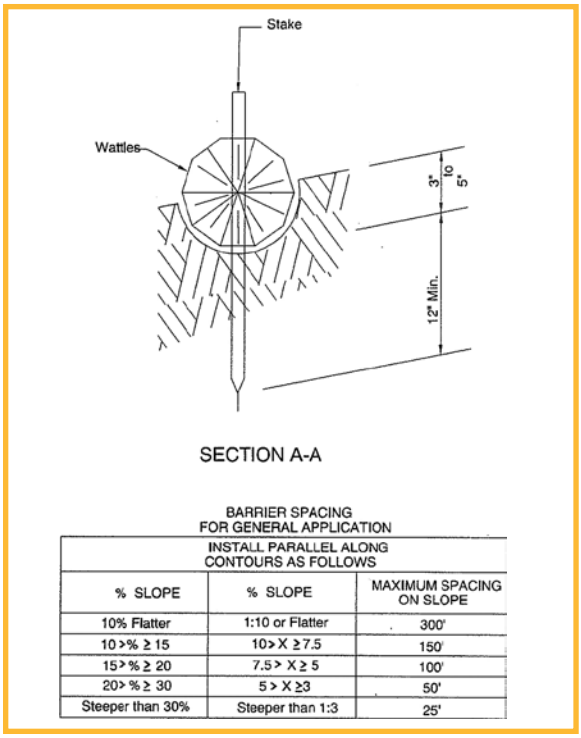

BARRIER SPACING
FOR GENERAL APPLICATION

INSTALL PARALLEL ALONG CONTOURS AS FOLLOWS		
% SLOPE	% SLOPE	MAXIMUM SPACING ON SLOPE
10% Flatter	1:10 or Flatter	300'
10 >% ≥ 15	10> X ≥7.5	150'
15 >% ≥ 20	7.5> X ≥ 5	100'
20> % ≥ 30	5 > X ≥3	50'
Steeper than 30%	Steeper than 1:3	25'

Best Management Practices (BMPs): *Pollution Prevention*

LAND AND DRAINAGE ALTERATION PROGRAM (**LDAP**)

Managing soil erosion and sediment runoff is a priority on any construction site, but an effective site management plan should account for sources of pollution introduced to the site during construction. This includes anything from domestic garbage and construction debris to hazardous materials that are stored on site.

SOLID WASTE MANAGEMENT

Solid waste on construction sites can be anything from scrap material produced by demolition, construction related debris, and domestic wastes such as food and drink containers.

Each construction site must select a designated site for storing solid waste materials, preferably in a watertight container and under cover if possible.

The materials should be properly disposed of at regular intervals or as the containment area fills.

HAZARDOUS MATERIAL STORAGE AND SPILL PREVENTION

Hazardous materials on constructions sites typically include items like paint, thinners, petroleum products, concrete curing agents, and solvents. These items pose a threat to the groundwater if spilled. That is significant because most of Springfield's drinking comes from groundwater, collected from wellheads spaced throughout the city.

Hazardous items must be stored in a watertight containment area that is at least double the volume of the material being stored. The containment must be covered or placed in an area that is protected from rain.

Dense non-aqueous phase liquids (DNAPLs) are liquid compounds that have a density higher than that of water and are slightly soluble in water. That means that the spilling of a DNAPL may cause the liquid to travel down through the soil and through the water table. These materials should never be stored on site and they are prohibited from use on any site within a wellhead protection zone.

Although the prevention of spills through proper handling and storage of hazardous materials should be the primary goal, spill kits should always be kept on any site where such materials are in use. The spill kit should include a variety of materials such as booms, pads, and litter that can absorb spilled material. All workers on the site should know the location of the kit and be trained in the proper use of the materials.

DEWATERING

Excavations during the rainy season or in any location with a high water table may encounter groundwater that will need to be removed.

Dewatering using a pump and hoses is an effective way to remove water from an excavation, but presents a problem if the water is contaminated with sediment or other pollutants.

Contaminated water must be treated before it enters the stormwater system or any drainage way. Filter bags, filter tanks, and sediment traps are effective methods for removing sediment from the water source prior to discharging to the public system.

On larger projects, pumping water to undisturbed, vegetated areas can be an effective way to allow the water to naturally filter and infiltrate back into the groundwater supply.

Best Management Practices (BMPs): *Wet Weather Controls*

LAND AND DRAINAGE ALTERATION PROGRAM (**LDAP**)

When it rains, exposed soils can pollute rivers

Rain causes most of the erosion in western Oregon. The deposition of sediment in stormwater pipes reduces capacity and may cause flooding.

The stormwater system includes publicly maintained pipes, culverts, gutters, catch basins, ditches, channels, ponds, wetlands, and other waterways.

Water entering Springfield's storm drains and channels is not cleaned – it flows directly into local waterways that empty into the McKenzie and Willamette Rivers.

Sediments and debris flowing through the stormwater system pollute local waterways. They block sunlight, limit plant growth, harm aquatic life, and interfere with recreation and harm water quality. Sediments remove oxygen from the water making it difficult for fish to breathe, feed, and reproduce. Eroded soil may have water pollutants such as harmful nutrients, bacteria, metals, and other toxic substances.

Wet Weather Best Management Practices

1 Protect all stormwater systems, water features, and natural resources.

To ensure water quality:

- ❑ Identify site characteristics and properly install erosion prevention measures.
- ❑ Preserve as much existing vegetation as possible.
- ❑ For sediment control use sediment fence, mulch/compost berms, check dams, bio-bags, curb inlet sedimentation dams, drop in sediment inserts, or other approved BMPs.

2 Sediment, soil, or construction-related material is required to be immediately removed from right-of-way/adjoining property and natural resources.

The wet weather season increases runoff and tracking from construction sites.

- ❑ Maintain good construction entrance/exit.
- ❑ Sweep and remove any off-site tracking immediately.
- ❑ Maintain and monitor sediment collection devices and keep all work areas clean.
- ❑ Site operators will be required to immediately correct all deficiencies.

3 Construction site entrances (open grade crushed rock).

Protect adjoining roads and waterways from vehicle tracking off of the site.

RESIDENTIAL:

- ❑ Construct the entrance/exit to the foundation or minimum of 20 feet.
- ❑ Use open grade crushed rock.
- ❑ Install geotextile fabric at subgrade to prevent fine sediment from migrating through rock entrance.

COMMERCIAL:

- ❑ Minimum Length:
  - ❍ 50 feet for sites disturbing less than one acre.
  - ❍ 100 feet for sites disturbing more than one acre.
- ❑ Use three (3) inch open rock or larger.
- ❑ Install geotextile fabric at subgrade prior to rock placement.
- ❑ Construct to a minimum depth of eight (8) inches.

4 Cover all exposed soil.

Protect all exposed soil.

- ❑ Stabilize all exposed soils with recommended soil coverage methods such as hydro seeding, mulching, compost, or plastic sheeting with anchors. On slopes greater that 2H:1V use erosion blankets or matting such as excelsior, coconut, textile, or plastic matting, applied in accordance with manufacturer's recommendations.
- ❑ Use berms or swales to divert runoff from exposed soils.

Now is the time to implement required Wet Weather Controls. ***Wet weather season is October 1–April 30.***

Updated March 2024

We can help! **ENGINEERING GROUP** • Development & Public Works Department • City of Springfield, Oregon
Visit: 225 5th St., Springfield, OR 97477 • **Call:** 541-726-5931, 541-736-1037 • **Online:** springfield-or.gov, bit.ly/springfieldLDAP

Best Management Practices (BMPs): *Concrete & Mortar*

LAND AND DRAINAGE ALTERATION PROGRAM (**LDAP**)

Concrete & Mortar

As a concrete company or contractor, you are responsible for protecting plants, animals, people, and waterways from concrete waste and wash water. The City of Springfield is here to help you properly manage concrete on the construction site.

Concrete contains heavy metals and significant amounts of sediment. It is highly alkaline and corrosive.

Problems caused by concrete material include:

- **Polluted groundwater**, which is where most of Springfield's drinking water comes from.
- **Harmed fish** and other aquatic life.
- **Negative effects to stream pH, tree growth,** and other parts of a healthy landscape.
- **Build up in storm drains** and the public stormwater system, which can cause flooding and costly repairs.

WHY IS IT IMPORTANT?

In addition to harming land, water, and aquatic life, improper disposal of concrete, cement-related mortars, and concrete/cement wastes violate state and local laws and could lead to costly fines and penalties. It is against federal, state and local law to discharge non-stormwater substances into the stormwater system, even if they're natural or biodegradable. The stormwater system includes street gutters, storm drains and open channels.

WHAT TO DO ABOUT CONCRETE

1) Plan ahead

- Plan to complete concrete, asphalt, and seal coat activities during dry weather, if possible. This will allow adequate time for them to set and cure before exposure to rain has the opportunity to carry them into local stormwater systems.
- Always store dry and wet materials in areas that remain protected from wind, rainfall, and runoff.
- Securely close bags of cement after they are open. Keep wind-blown cement powder away from gutters, storm drains, rainfall, and runoff.
- Identify the location of designated concrete wash/disposal areas on each jobsite.
- Install check dams or alternative collection methods down slope from areas of concrete work in order to capture contaminated runoff prior to entering storm drains or waterways.
- If mixing your own materials, prepare only the amount of concrete or cement required. If using a concrete delivery service, encourage them to protect water quality by using the methods described on this page.

2) Prepare the site

- Protect catch basins and manholes when applying seal coat, slurry seal, fog seal, etc., or when performing saw cut operations.
- Properly dispose of all spilled material and be prepared to contain all washwater on soil, preferably in a bowl-shaped area, to prevent it from leaving the washout area.
- Set up and operate small mixers on tarps or heavy plastic drop cloths to collect spills. Discard the spilled material in the trash.
- Designate an appropriate washout area on each jobsite and brief all concrete workers on its location and use.

3) During construction

- Shovel or vacuum saw-cut slurry and remove from the site, always preventing its discharge into stormwater drains or waterways.
- Wash down exposed aggregate concrete only in a manner that allows for proper collection and disposal of waste products.
- Never wash sweepings from exposed aggregate concrete into a street or storm drain. Collect and return to aggregate base stockpile or dispose of properly.
- When breaking asphalt or concrete, control excess dust using a small amount of water and control runoff. Remove all chunks and pieces from the site and recycle or dispose of properly. For a fee, Lane County's Glenwood Central Receiving Station will recycle small quantities of concrete. Please inquire with Lane County for current rates, quantities, and specific requirements for concrete disposal.

4) Clean up

- Place all excess concrete in a form, box, or designated washout area where it may be removed after it has hardened. Clean all finishing tools in a designated washout or other properly contained areas.
- Use the minimum amount of water to wash the chute, finishing tools and any other equipment.
- Wash out concrete mixers, pumping equipment and concrete finishing tools only in designated washout areas or other containment areas.
- Whenever possible, recycle washout by pumping it back into mixers for reuse. Never dispose of washout into the street, storm drains, drainage ditches, or streams.
- After driveway or sidewalk construction, wash fine particles onto soil or landscaped areas and avoid washing to paved areas that lead to streets and storm drains.
- Dispose of small amounts of excess dry concrete, grout, and mortar in garbage receptacles.
- Never bury waste material where it may leach into groundwater and contaminate drinking water sources.