City of Springfield
Community Development Division

INVITATION TO BID

For

Project No. P21172
Project Name: Aster St. at S. 58th and Meadow Park

A NON-MANDATORY PRE-BID MEETING:	
Date:	**Monday, November 21st, 2022**
Time:	**10:00 a.m.**
Location:	Microsoft Teams meeting **Join on your computer, mobile app, or room device** Click here to join the meeting Meeting ID: 236 573 638 000 Passcode: ieCTxV Download Teams | Join on the web Learn More | Meeting options
BID OPENING:	
Date:	**Thursday, December 8th, 2022**
Time:	**2:00 p.m.**
Location:	Microsoft Teams meeting **Join on your computer, mobile app, or room device** Click here to join the meeting Meeting ID: 236 573 638 000 Passcode: ieCTxV Download Teams | Join on the web Learn More | Meeting options

The deadline for submitting questions regarding this Invitation to Bid, prior to bid opening, is Monday, November 28th, 2022, by 5:00 pm, as specified in Section 3.3 of the Instruction to Bidders.

- The complete set of bid documents for this project consists of two sections: *The Invitation to Bid Documents and the Project Plan Set.*

- For the City of Springfield to consider your Bid responsive, you must include the documents listed in the Instruction to Bidders, *Section 5.1 of the Bid Submittal and Forms and as indicated by Table of Contents.*

- *Any addendums or revisions must be acknowledged and submitted with your Bid except for plans and drawings, which are not required to be submitted as a part of your Bid.*

TABLE OF CONTENTS AND BIDDER'S CHECKLIST

Local Funding

Documents indicated with a checkbox must be included with each bid submittal for the bid to be considered responsive. *Documents without a checkbox do not need to be included in the bid submittal.*

Book 1: Invitation to Bid Documents

- Invitation to Bidders
- ☐ Bid Submittal, Terms, and Declarations (Acknowledge Addenda)
- Instruction to Bidders
- Contract (Sample)
- Prevailing Wage Rate Information
- Special Provisions – Scope of Work
- ☐ First-Tier Subcontractor disclosure form
- ☐ Financial Responsibility
- ☐ Certificate of Compliance – Statement of nondiscrimination/ORS 279A.110
- ☐ Minority, Woman, and Emerging Small Business/Disadvantaged Business Enterprise Form (MWESB)
- ☐ Conflict of Interest Disclosure Form (COI)
- ☐ Non-Collusion Affidavit
- Bid Bond (Sample)
- Performance Bond (Sample)
- Payment Bond (Sample)

Book 2: Project Plan Set and Standard Drawings– Separate Book

- Construction Plans and Drawings

Additional Documents to be submitted

- ☐ Bid Bond
- ☐ Addenda (if applicable)

CITY OF SPRINGFIELD, OREGON
Invitation to Bidders

Public Works Capital Improvement Project

Project No. P21172 **Title: Aster Street at S. 58th at Meadow Park**

Description: Work consists of the curb ramp improvements to the Meadow Park walkway off H Street and the Aster Street curb ramps at 58th Street

A **NON-MANDATORY** pre-bid meeting will be held on **Monday, November 21st, 2022, at 10:00 am**. The meeting will be held through an online Teams meeting. Please use the link below to attend:

Microsoft Teams meeting

Join on your computer, mobile app or room device

Click here to join the meeting

Meeting ID: 236 573 638 000

Passcode: ieCTxV

Download Teams | Join on the web

Learn More | Meeting options

Bid documents are available from the City of Springfield City Hall, Development and Public Works, Southeast Quad, 225 Fifth Street, Springfield, OR 97477, for a non-refundable fee of $**20.00** and are available for viewing at this location. Abridged bid documents are available online at P21172 – Aster Street at S. 54th and Meadow Park ADA Ramps - City of Springfield Oregon (springfield-or.gov). *Bid books on file with plan centers are incomplete and cannot be submitted as completed bids.*

The **deadline for submitting questions** regarding this Invitation to Bid is **Monday, November 28th, 2022, at 5:00 pm**. Contact with other City officials may be grounds for disqualification of the bid. All questions should be addressed to Amanda Clinton, Contracts Analyst, at 541-726-3628 or aclinton@springfield-or.gov.

Any bidder requiring special assistance or auxiliary aids during the bidding and award process should contact **Mariah Kimpton at 541-726-2245 or mkimpton@springfield-or.gov** at least two (2) business days before the scheduled program, activity, or meeting for hearing assistance or a sign language interpreter and at least five (5) business days before the event for all other meeting accommodations. Assistive listening systems are available for the hearing impaired in the Municipal Courtrooms and City Council Chambers. TTY users dial Oregon Relay Services at 711. Requests for documents in alternate formats should be submitted at least ten (10) calendar days prior to the date the materials are needed to allow time for the City to respond to the request. At the discretion of the City, submission deadlines may be extended to accommodate a request for alternate formats.

This project is subject to the state prevailing wage rates under ORS 279C.800 to 279C.870. Each bid must contain a statement as to whether the bidder is a resident bidder, as defined in ORS 279A.120. In accordance with ORS 279C.365, the City will not consider a bid unless it contains a statement by the bidder that they will comply with ORS 279C.838 through ORS 279C.870.

All Contractors performing work on this project shall have a current, valid certificate of licensure issued by the Construction Contractor's Board in accordance with ORS 701 and, if performing work described in ORS 671.520, a current, valid certificate of licensure from the State Landscape Contractor's Board in accordance with ORS 671.560, as applicable, in place at the time the quote is presented.

The City of Springfield may reject any or all bids not in compliance with all prescribed public bidding procedures and requirements, including the requirement to demonstrate the bidder's responsibility under ORS 279C.375, or waive minor irregularities not affecting substantial rights and may reject for a good cause any or all bids upon a finding of the City of Springfield it is in the public interest to do so and accept such bids that in the opinion of the Springfield City Council are in the best interest of the City.

The City of Springfield encourages contractors, sub-contractors, and minority, woman-owned, and emerging small businesses to participate in City projects.

Sealed bids will be received at City Hall Development and Public Works, Southeast Quad, Attn: Amanda Clinton, Contracts Analyst, 225 Fifth Street, Springfield, OR 97477, until, but no later than 2:00 pm Local Time, **Thursday, December 8th, 2022**, and opened immediately online in a Teams meeting for the construction of the following public works improvement project in the City of Springfield:

Microsoft Teams meeting

Join on your computer, mobile app or room device

Click here to join the meeting

Meeting ID: 236 573 638 000

Passcode: ieCTxV

Download Teams | Join on the web

Learn More | Meeting options

Published: Daily Journal of Commerce, The Chronicle, OregonBuys

City of Springfield
225 Fifth Street
Springfield, OR 97477

Construction Bid Submittal

Project No. P21172

Project Title: Aster St at S. 58th and Meadow Park

Item No.	Description	Specification Number	Approx. Quantity	Per	Unit Price	Total Price Extension
1	Mobilization	00210	1	LS		
2	Temporary Work Zone Traffic Control, Complete	00221	1	LS		
3	Concrete Washout Facility	00280	2	EA		
4	Erosion Control	00280	1	LS		
5	Inlet Protection, Type 3	00280	2	EA		
6	Pollution Control Plan	00290	1	LS		
7	Removal of Curbs	00310	81.5	FT		
8	Removal of Walks and Driveways	00310	77.0	SY		
9	Adjusting Boxes	00490	2	EA		
10	Level 2, ½ Inch ACP Mixture	00744	11	TON		
11	6 Inch Asphalt Concrete Pavement Repair	00748	33.5	SY		
12	Concrete Curbs, Curb and Gutter	00759	81.5	FT		
13	Monolithic Curb and Sidewalks	00759	750.1	SF		
14	Extra for New Curb Ramps	00759	3	EA		
15	Truncated Domes on New Surfaces	00759	32.0	SF		
16	Remove and Reinstall Existing Signs	00905	1	LS		
17	Sign Support Footings	00920	1	LS		
18	Pipe Breakaway Sign Supports	00930	1	LS		
19	Bark Mulch	01040	3	CY		

Terms, Declarations and Bid Submittal

Bidder's Understanding

Bidders shall determine for themselves all the conditions and circumstances affecting the projected cost of the proposed work by personal examination of the site, Contract documents, and by such other means they may deem to be necessary. It is understood and agreed that in the event the City has obtained information from data at hand regarding underground or other conditions or obstructions depicted in the Contract

documents, there is no expressed or implied agreement that such conditions are fully or correctly shown, and the Bidder must take into consideration the possibility that conditions affecting the cost or quantity of work may differ from those indicated.

The Bidder is familiar with and is satisfied as to all federal, state and local laws and regulations that may affect cost, progress, and performance of the work.

Bid

The undersigned Bidder having examined the Specifications and Contractual Documents and having satisfied themselves as to all conditions to be encountered, hereby proposes to furnish all labor, material and equipment and perform all work necessary to complete the project in accordance with this Bid, the Contract Plans, Section 100 of the City of Springfield Standard Construction Specifications, Parts 00200 through 03000 of the 2021 Oregon Standard Specifications for Construction, the Special Provisions, and all other Contractual Documents at the prices and on the terms herein contained.

The unit price Bids are submitted with the understanding that the quantities stated are approximate and are given only as the basis of calculation for comparison of Bids and determining that the unit prices are balanced and that final payment for all unit price items will be based on actual quantities.

It is understood that in the instance of a discrepancy between the unit price and the extension (total price extension) the unit price shall govern. The extension shall be determined by multiplying the unit price by the number of units (approximate quantity).

Bid Guarantee

As required by ORS 279C.365(5) each Bid shall be accompanied by a Bid Bond, cash, or a certified or cashier's check written upon a bank in good standing and in a form acceptable to the City, payable to the Finance Director of the City of Springfield, Oregon, in an amount equal to at least 10 percent of the total amount of the Bid. Bid Bonds shall be issued by a surety company registered to issue bonds in the State of Oregon, and utilizing a bond form acceptable to the City. The City will accept AIA Document A310-2010. The Bid Bond may not be altered.

Such Bid Guarantee shall be forfeited and become the property of the City in case the Bidder shall fail or neglect to furnish a satisfactory Performance and/or Payment Bond issued by a viable bond company acceptable to the City as required by ORS 279C.380 and to execute the Contract within ten (10) days (Saturday, Sunday, and holidays excepted) after receiving Contract from the City for execution. For information regarding Performance and Payment Bond requirements see City of Springfield Contract document, Section 5. City Bonding.

Bid Acceptance Period

This Bid will remain subject to acceptance for a period of 60 days after the bid opening, or for such longer period of time that the Bidder may agree to in writing upon request of the City.

Contract Award

Bids will be accepted and awarded in accordance with Oregon Public Contracting Law and the City's most recent version of the Standard Construction Specifications.

Prior to awarding the Contract, the City may, at its sole discretion, require Contractors and/or Subcontractors to demonstrate to the City's satisfaction that they have a complete and clear understanding of all requirements of the Prevailing Wage Rate Laws contained in ORS 279C.800 through 279C.870 and possess the expertise necessary for fulfilling their obligations pertaining to these requirements throughout the administration of the Contract. In determining competency, the City may consider Certified Payroll Reports submitted by the Contractor and/or Subcontractor for projects previously performed for the City, copies of Certified Payroll Reports submitted to other public entities, references from other public entities attesting to the Contractor's expertise, or an interview with the Contractor regarding their personnel resources and expertise or their ability to obtain the resources and expertise necessary to meet all contractual responsibilities in accordance with ORS 279C.375.

Time is of the Essence
Time is of the essence in the Contractor's performance of the Contract. Delays in the Contractor's performance of the work may inconvenience the public, interfere with business and commerce, and increase cost to the City. It is essential and in the public interest that the Contractor prosecute the work vigorously to Contract completion. The City does not waive any rights under the Contract by permitting the Contractor to continue to perform the Contract, or any part of it, after the Contract Time of Completion shown below, or as adjusted by Contract Change Order, has expired.

Liquidated Damages
The City of Springfield and the Contractor agree that; (a) the amounts so fixed are reasonable forecasts of just compensation for the harm that is caused by the breach; (b) the harm that is caused by the breach is one that is incapable of or very difficult of accurate estimation; and, (c) the amount so fixed is not fixed as a penalty to coerce performance of the Contract but is rather intended to be a genuine pre-estimation of injury to the City of Springfield in lieu of performance within the contract time by the Contractor.

a. Delay
It is agreed by the City of Springfield and by the Contractor that the need exists for a damage provision in the event the Contractor fails to complete the work within the Contract time specified, or any extension thereof, by the City of Springfield. The City of Springfield and the Contractor further agree that the Contractor shall be liable to the City of Springfield for fixed, agreed and liquidated damages for each and every calendar day of delay in the amount of $500.00 per day in accordance with Subsection 180.85 of the Standard Construction Specifications.

b. Failure to Report Spills
The Contractor also agrees to liquidated damages in the amount of $500.00 per incident for failure to report sewage spills plus an amount sufficient to reimburse the City for any civil and administrative penalties paid by the City as a result of the contractor's failure to report. Failure to report sewage spills may subject the City to (1) civil penalties of up to $32,500.00 per day of violation pursuant to Section 309(d) of the Clean Water Act, 33 U.S.C. § 1319(d); (2) administrative penalties of up to $11,000.00 per day for each violation, pursuant to Section 309(g) of the Clean Water Act, 33 U.S.C. § 1319(g); or (3) civil action in federal court for injunctive relief pursuant to Section 309(b) of the Clean Water Act, 33 U.S.C. § 1319(b).

Contract Time of Completion
The Contractor shall not begin work under this Bid until written Notice to Proceed has been received and a pre-construction meeting has been held. The Contractor shall complete the work under this Bid within 30 working days and should have the project completed no later than February 28th, 2022.

The Contractor shall apply for any extensions of time as specified in Subsection 180.80 of the Standard Construction Specifications.

Certifications
The undersigned hereby certifies that:

1.) If awarded the Contract, that they shall fully comply with all provisions regarding the prevailing wage rates as required by ORS 279C.800 to 279C.870 and/or 40 U.S.C. 2762 as applicable.

2.) The Contractor, Subcontractor, suppliers of materials or services, and others engaged by the Contractors, shall comply at all times with and observe all such laws, ordinances, regulations, orders, and decrees; and shall hold harmless and indemnify the City of Springfield and its representatives against any claim or liability arising from or based on the violation of any such law, ordinance, regulation, order, or decree.

3.) The Contractor, Subcontractor or other person doing, or contracting to do, or contracting for the whole or any part of the work on the Contract shall comply with all applicable requirements of Federal and State civil rights and rehabilitation statutes, rules and regulations.

4.) In conformance with OAR 137-049-0440(3) and ORS 279A.110(4) the Contractor has not, and will not, discriminate against a Subcontractor in the awarding of a subcontract because the Subcontractor is a minority, women or emerging small business enterprise certified under ORS 200.055 or a business enterprise that is owned or controlled by or that employs a disabled veteran, as defined in ORS 408.225.

5.) In accordance with ORS 279C.505, the Contractor will;

a.) Make payment promptly, as due, to all persons supplying to the Contractor labor or material for the performance of the work provided for in the Contract.

b.) Promptly pay all contributions or amounts due the State Industrial Accident Fund, or private carrier of accident insurance, from such Contractor or Subcontractor incurred in the performance of the Contract. If a private carrier is used, the Contractor shall notify the Engineer as to the carrier's name and address before commencement of work.

c.) Not permit any lien or claim to be filed or prosecuted against the state or a county, school district, municipality, municipal corporation or subdivision thereof, on account of any labor or material furnished.

d.) Pay to the Department of Revenue all sums withheld from employees under ORS 316.167.

e.) Have an employee drug testing program in place at the time of signing the contract and will maintain such drug testing program in place over the life of the Contract. Upon request, the Contractor shall furnish a copy of the employee drug testing program to the City.

6.) In accordance with ORS 279C.510, If demolition is involved, the Contractor shall salvage or recycle construction and demolition debris, if feasible and cost-effective as required by ORS 279C.510(1).
If lawn or landscaping maintenance is involved, the Contractor shall compost or mulch yard waste in an approved site, if feasible and cost-effective as required by ORS 279C.510(2).

7.) In accordance with ORS 279C.520, no person will be employed by the Contractor or Subcontractor for more than 10 hours in any one day, or 40 hours in any one week except in cases of necessity, emergency, or where the public policy absolutely requires it, and in such cases the person so employed shall be paid at least time and one-half the regular rate of pay for all times worked in excess of eight hours a day or 40 hours in any one week when the work week is five consecutive days, Monday through Friday; or in excess of 10 hours a day or 40 hours in any one week when the work week is four consecutive days, Monday through Friday; and for all work performed on a Saturday, Sunday and on any legal holiday specified in ORS 279C.540.

8.) In compliance with ORS 279C.525, the Contractor has received and reviewed Federal, State and local agencies that may have enacted ordinances, rules or regulations dealing with the prevention of environmental pollution and the preservation of natural resources that may affect the performance of this Contract as identified under Section 13 of the Contract. Accordingly, if the Contractor is delayed or must undertake additional work by reason of ordinances, rules, or regulations relating to the prevention of environmental pollution and the protection of natural resources subsequent to the date of submission or the successful quote, the City may:

a.) Terminate the Contract,

b.) Complete the work itself,

c.) Use non-owner forces already under contract with the City of Springfield,

d.) Solicit bids for a new contractor to provide the necessary services under competitive bid requirements 279C,

e.) Issue the Contractor a change-order setting forth additional work that must be undertaken.

9.) In accordance with ORS 279C.530, the Contractor will;

a.) Promptly, as due, make payments to any person, co-partnership, association or corporation, furnishing medical, surgical, and hospital care or other needed care and attention, incidental to

sickness or injury, to the employees of such Contractor, of all sums which the Contractor agrees to pay for such services and all monies and sums which the Contractor:

1. May or shall have deducted from the wages of his employees for such services pursuant to the terms of Oregon Revised Statutes and any contract entered in pursuant thereto; or
2. Collected or deducted from the wages of his employees pursuant to any law, contract, or agreement for the purpose of providing or paying for such service; and
3. All employers working under the Contract are either employers that will comply with ORS 656.017 or employers that are exempt under ORS 656.126. The Contractor shall ensure that each of its Subcontractors complies with these requirements.

10.) No Contractor, Subcontractor or any firm, corporation, partnership or association in which the Contractor or Subcontractor has a financial interest who appears on the *List of Contractors Ineligible to Receive Public Works Contracts*, as established by the Bureau of Labor and Industries, will perform work under this Contract, as specified in ORS 279C.860.

11.) No Contractor, Subcontractor or any firm, corporation, partnership or association in which the Contractor or Subcontractor has a financial interest who appears on the Construction Contractor's Board *Not Qualified to Hold Public Contracts* list, will perform work under this Contract, as specified in ORS 701.227(4).

12.) The Contractor performing work on this project shall have a current, valid certificate of licensure issued by the Construction Contractor's Board in accordance with ORS 701 and, if performing work described in ORS 671.520, a current, valid certificate of licensure from the State Landscape Contractor's Board in accordance with ORS 671.560 as applicable in place at the time the quote is presented.

13.) Prior to performing any work under the Contract all Subcontractors shall have a current, valid certificate of licensure issued by the Construction Contractor's Board in accordance with ORS 701 and, if performing work described in ORS 671.520, a current, valid certificate of licensure from the State Landscape Contractor's Board in accordance with ORS 671.520 as applicable.

14.) In compliance with ORS 279C.836, the Contractor shall confirm that all Subcontractors have a valid public works bond on file with the Construction Contractors Board prior to allowing them to perform any work under the Contract.

15.) If the Contract specifies that the project includes Asbestos Abatement, the Contractor and all Subcontractors performing work on the project shall be licensed in accordance with ORS 467A.720 prior to performing any work on the project. Certification of compliance shall be presented to the City upon request.

16.) The Contractor shall function as an independent contractor for the purposes of this Contract and shall not be considered an employee of the City of Springfield for any purpose. The Contractor shall assume sole responsibility for any debts or liabilities that may be incurred by the Contractor in fulfilling the terms of this Contract and shall be solely responsible for the payment of all federal, state, and local taxes which may accrue because of this Contract.

17.) The Contractor and all Subcontractors shall comply with all applicable provisions of the Americans With Disabilities Act of 1990, 42 USC Section 12101 et seq. and Section 504 of the Rehabilitation Act of 1973.

Bid Addenda

All Addenda issued are considered to be part of the specifications of the Invitation to Bid and, as such, are as incorporated into the Contract as specified in Section 120.15 of the Standard Construction Specifications.

By signing below, I acknowledge the receipt of the following Addenda documents and certify that the specifications contained in each have been considered and incorporated into the Bid as presented. All Addenda must be included with the Bid submitted.

Addenda Number	Addenda Date

Declarations

As required by ORS 305.385(6), under penalty of perjury, by signing below the Contractor represents that, to the best of their knowledge, neither they nor any applicable Subcontractors performing work under the Contract are in violation of any tax laws as described in ORS 305.380(4) and have complied with the tax laws of this state or a political subdivision thereof including, but not limited to, ORS 305.620 and ORS Chapters 316, 317 and 318. The Contractor shall also covenant to continue to comply with the tax laws of this state or a political subdivision thereof during the term of the Contract and that Contractor's failure to comply with such laws prior to execution of the Contract or during the term thereof is a default for which the City may terminate the Contract and seek damages and other relief available under the terms of the Contract or under applicable law.

The undersigned Bidder declares that the only persons or parties interested in the Bid are those named herein, that this Bid is, in all respects, fair and without fraud, that it is made without collusion with any official of the City, and that the Bid is made without any connection or collusion with any person submitting another Bid on this project.

I have read, fully understand, and agree that as Bidder I, and all Subcontractors, will comply with all of the terms and conditions of the contract for which this Bid is presented. By signing below I attest that I am an officer or a duly authorized representative of the business listed below and that I possess the legal authority to submit this Bid for consideration.

If the Bid is submitted by a joint venture and is in the name of the joint venture, by signing below I certify that all parties have examined this Bid, including all requirements and the Contract terms and conditions and, if successful, the joint venture shall execute a Contract which incorporates the stated requirements, terms and conditions.

Bidder's Signature _____

Bidder's Name *(Please Print)* _____

Title _____

Business Name _____

Business Address _____

City _____ State _____ Zip _____

Phone Number _____ Cell Phone _____

Date _____ E-mail Address _____

CITY OF SPRINGFIELD

INSTRUCTION TO BIDDERS

Local Funding Sources

1. Contracting Law

The Bidder is presumed to be familiar with all federal, state, and local laws, ordinances and regulations, orders and decrees which affect those engaged or employed in the work, materials, or equipment used in the proposed construction or which may affect the conduct of the work. If the Bidder or Contractor shall discover any provision in the Contract Documents which is contrary to or inconsistent with any law, ordinance, or regulation, he/she shall immediately report it to the Owner in writing.

The Contractor, Subcontractor, suppliers of materials or services, and others engaged by the contractors, shall comply at all times with and observe all such laws, ordinances, regulations, orders, and decrees; and shall hold harmless and indemnify the City of Springfield and its representatives against any claim or liability arising from or based on the violation of any such law, ordinance, regulation, order, or decree.

2. Prequalification

There is no prequalification application to this Contract. Bidders unfamiliar to the City and who are not currently pre-qualified with ODOT or the City, may be required to prove to the City that they have the adequate resources, experience and equipment to complete the work. In this regard, please thoroughly review and comply with the requirements of Section 5.5 References.

3. Contract Documents

3.1 Plans and Specifications

Plans, Specifications, and any additional information relative to this project which are on file in the City Engineer's Office shall be made available there for inspection by prospective Bidders.

3.2 Examination of Contract Documents and Site of Work

Bidders shall determine for themselves all the conditions and circumstances affecting the projected cost of the proposed work by personal examination of the site, Contract Documents, and by such other means. It is understood and agreed that the City has obtained information regarding underground or other conditions or obstructions depicted in the Contract Documents from data at hand. There is no expressed or implied agreement that such conditions are fully or correctly shown, and the Bidder must take into consideration the possibility that conditions affecting the cost or quantity of work may differ from those indicated.

3.3 Interpretation of Contract Documents

If it should appear to a Bidder that the work to be done is not sufficiently described or explained in the Contract Documents, or that Contract Documents are not definite and clear, the Bidder shall make written inquiry regarding same to the individual shown, in the manner instructed and within the timeframe indicated in the Invitation to Bid advertisement. Questions received will be evaluated and if, in the judgment of the City, the response does not alter or amend the requirements or scope of the Invitation to Bid, but merely clarifies existing information, the response will be entered on the Clarifications Log and posted to the project webpage as shown in the Invitation to Bid. If, in the judgment of the City, additional information or interpretation is necessary, such information shall be supplied in the form of an addendum to all individuals, firms, and corporations listed on the Plan Holders List and those individuals that attended

the Pre-Bid Meeting and provided an accurate e-mail address on the sign-in sheet. Such addenda shall have the same binding effect as though contained in the main body of the Contract Documents. The City is not responsible for any explanation, clarification, interpretation, or approval made or given in any manner except by written addenda issued by City.

3.4 Addenda to Contract Documents

Any addenda issued by the City, which may include changes, corrections, additions, interpretations, or information issued 72 hours or more before the scheduled closing time for filing the Bids shall be binding upon the Bidder. Addenda will be posted to the City's website at Invitations to Bid - City of Springfield Oregon (springfield-or.gov); click under the project the addenda pertains to. The Contractor should check the website frequently for new postings during the open bid period. The City shall make a reasonable effort to notify all individuals, firms, and corporations listed on the Plan Holders List and those individuals that attended the Pre-Bid Meeting and provided an accurate e-mail address on the sign-in sheet when addenda are issued. Failure of the Contractor to receive or obtain such addenda shall not excuse them from compliance.

4. Estimate of Listed Quantities

The estimate of quantities of work to be done under unit price bids is approximate and is given only as the basis of calculation for comparison of Bids and award of the Contract. The Owner does not agree that the actual amount of work will correspond precisely to the amount as shown or estimated. Payment will be made at unit prices under a Contract only for work actually performed or materials actually furnished according to actual measurements.

The Owner reserves the right to increase or decrease the amount of any class or portion of the work. No such change in the work shall be considered as a waiver of any condition of the Contract, nor shall such change invalidate any of the provisions thereof.

5. Bid

5.1 Bid Submittal and Forms

The complete set of bid documents for this project consists of two sections, the Invitation to Bid Documents and the Project Plan Set.

For the City of Springfield to consider your bid responsive, you must include all documents listed in the Instruction to Bidders, in numerical order according to the Table of Contents.

The forms that must be included with all bid submittals, include:

1. Bid Submittal, Terms and Declarations
2. First-Tier Sub-Contractor Disclosure Form
3. Financial Responsibility Form
4. Certificate of Compliance - Statement of Non-Discrimination/ORS 279A.110
5. Minority, Woman and Emerging Small Business/Disadvantaged Business Enterprise Form (MWESB)
6. Conflict of Interest Disclosure Form (COI)
7. Non-Collusion Affidavit
8. Bid Bond

The Project Plan Set is not required to be submitted as part of your bid.

Additionally, any addendums or revisions must be acknowledged and submitted with your Bid.

The Bid Submittal, Bid Bond, Certified Check, or Cashier's Check shall be enclosed in a sealed and labeled

envelope. The outside of the envelope shall plainly identify: The project name and project number and (2) The Bid opening date. All Bids must be clearly and distinctly typed or written with ink or indelible pencil. Unless otherwise specified, Bidders shall bid on all Bid items, and must include in their Bid prices the entire cost of each item of work set forth in the Bid.

Any statement accompanying and tending to qualify a Bid may cause rejection of such Bid, unless such statement is required in a Bid embracing alternate Bids. If, in the opinion of the City, the items or prices in any Bid appear unbalanced, incomplete, or fail to comply with all the terms required, the Bid may be rejected.

Sealed Bids shall be labeled clearly, addressed to Amanda Clinton, Contracts Analyst, and received at City of Springfield, City Hall, Development and Public Works, "Southeast Quad", 225 Fifth St. Springfield, Oregon, 97477 at, or before, the time and date noted on the Invitation to Bidders, after which time the Bids will be publicly opened and read aloud.

All Bids shall be on the form furnished by the City, and in addition to necessary unit price items and total prices in the column of totals to make a complete Bid, all applicable blanks giving general information must be filled in and the Bids signed by an officer or duly authorized representative of the Bidder. The only exceptions to this requirement are the Performance Bond, Payment Bond and the Contract documents which are provided here as a reference. However, if you are awarded the Bid, you will be required to submit fully executed copies of these documents upon request.

5.2 First Tier Subcontractor Statement

Bidders are required to disclose information about certain first-tier subcontractors when the contract value for a Public Improvement is greater than $100,000 (see ORS 279C.370). If the total Bid price for the contract exceeds $100,000, the Bidder shall submit on the form provided (within two working hours of the date and time of when the bids are due), a list of all first-tier subcontractors (those entities that would be contracting directly with the prime Contractor) which will be furnishing labor or material on the Contract whose subcontract value would be equal to or greater than 5 percent of the total Bid price, but at least $15,000. Also, any Subcontractor with a subcontract value greater than $350,000, regardless of the percentage of the total Bid price, must be listed. The following information must be listed: a) The Subcontractor's name and address, b) The Subcontractor's Construction Contractor Board registration number, if one is required, and c) The subcontract dollar value. If no subcontractors are being used that are subject to the above disclosure requirements, the Bidder is required to indicate "None" on the accompanying form. The form may be submitted with the Bid or may be submitted separately in a separate envelope from the Bid within two hours after the bid opening. The envelope containing the form should be marked "Subcontractor Disclosure Form Submitted for Project PXXXXX" and should also be marked with the name of the Bidder.

5.3 Non-Discrimination

Pursuant to ORS 279A.110, that the bidder has not discriminated and will not discriminate against a disadvantaged business enterprise, a minority-owned business, a woman-owned business, a business that a service-disabled veteran owns, or an emerging small business in obtaining any required subcontracts. The bidder understands that it may be disqualified from bidding on this public improvement project if the Agency finds that the bidder has violated subsection (1) of ORS 279A.110. The Bidder certifies that it has a written policy and practice that meets the requirements described in ORS 279A.112 (House Bill 3060, 2017) of preventing sexual harassment, sexual assault and discrimination against employees who are members of a protected class.

5.4 Non-Collusion

The price(s) and amount of this bid have been arrived at independently and without consultation, communication, or agreement with any other contractor, bidder, or potential bidder except as disclosed on

a separately attached statement. Neither the price(s) nor the amount of this bid, and neither the approximate price(s) nor approximate amount of this bid has been disclosed to any other firm or person who is a bidder or potential bidder, and they will not be disclosed before the opening of bids. No attempt has been made or will be made to induce any firm or person to refrain from bidding on this contract, to submit a bid higher than this bid, or to submit any intentionally high or noncompetitive bid or other form of complementary bid. This bid is made in good faith and not pursuant to any agreement or discussion with, or inducement from, any firm or person to submit a complementary or other noncompetitive bid. The bidder, its affiliates, subsidiaries, officers, directors, and employees are not currently under investigation by any governmental agency and have not in the last four years been convicted of or found liable for any act, prohibited by State or Federal law in any jurisdiction, involving conspiracy or collusion with respect to bidding on any public contract except as described on a separately attached statement. The bidder understands and acknowledges that the above representations are material and important and will be relied on by the Agency, in awarding the contract(s) for which this bid is submitted. The bidder understands that any misstatement in this certification is and shall be treated as fraudulent concealment from the Agency, of the true facts relating to the submission of bids for this contract.

5.5 Compliance With Oregon Tax Laws:

By signature on this bid, the undersigned hereby certifies under penalty of perjury that the undersigned is authorized to act on behalf of bidder, that the undersigned has authority and knowledge regarding bidder's payment of taxes, and that bidder is, to the best of the undersigned's knowledge, not in violation of any Oregon Tax Laws. For purposes of this
certification, "Oregon Tax Laws" means a state tax imposed by ORS 320.005 to 320.150 (Amusement Device Taxes), ORS 403.200 to 403.250 (Tax For Emergency Communications), and ORS Chapters 118 (Inheritance Tax), 314 (Income Tax), 316 (Personal Income Tax), 317 (Corporation Excise Tax), 318 (Corporation Income Tax), 321 (Timber And Forestland Tax), and 323 (Cigarettes And Tobacco Products Tax), and any local taxes administered by the Department of Revenue under ORS 305.620.

5.6 Withdrawal, Modification, or Alteration of Bid

A Bid may be withdrawn on written or telegraphic request of the Bidder prior to the scheduled closing time for filing Bids. No Bidder may withdraw its Bid or any portion thereof after the time set for the opening of Bids until a Contract has been awarded and executed or until sixty (60) days have elapsed since the Bid opening. Negligence on the part of the Bidder in preparing its Bid confers no right to withdraw its Bid after the scheduled closing time for filing Bids.

Prior to the scheduled closing time for filing Bids, changes may be made provided the changes are initialed by the Bidder or its Agent. If the intent of the Bidder is not clearly identifiable, the interpretation most advantageous to the City will prevail.

5.7 Late Bids

Bids received after the scheduled closing time for filing Bids as set forth in the Invitation to Bidders will be rejected and returned unopened to the Bidder unless such closing time is extended by the City.

5.8 References

In order to comply with the requirements of ORS279C.375 regarding the determination of bidder responsibility, completion of the *Financial Responsibility Form* included in the Invitation to Bid documents must be completed in full. The City will use the information provided to ascertain the financial responsibility of the bidder as it pertains to the specific criteria to be considered prior to award of a public works contract.

The City reserves the right to investigate the references, financial capacity, credit history and past

performance of any Bidder, including service(s) provided to City of Springfield, with respect to their successful performance on other projects; compliance with specifications and contractual obligations; expertise regarding the completion and submission of Certified Payroll Reports; completion or delivery of a project on schedule and within budget; and its lawful payment of suppliers, subcontractors and workers. The City reserves the right to use any information or reference that may be discovered in evaluating any bid. The City reserves the right to find a bid to be nonresponsive for failure or refusal of bidder to provide all information in a timely manner, as requested. The city may postpone issuance of a Notice of Intent to Award in order to complete its investigation. The City reserves the right to reject any bid at any time prior to the City's execution of a Contract in the event reference checks prove unsatisfactory. The City's investigation may include Bidder's previous business entities of the principals involved. If more than one Bidder is involved the City may investigate each entity. In the event that the city requests information from the Bidder the completeness of the information submitted, its veracity and the extent to which it has been independently verified will impact the City's decision.

5.9 Bid Ownership

All material submitted by the Contractor shall be considered the property of the City, and as such, shall not be returned to the Contractor after the deadline for submission of the Bid in question has passed. After opening, all bids will become part of the public record unless exempt under Oregon Public Records Law, see ORS 192.501, ORS 192.502 and ORS 279C.340.

5.10 Rejection of Bids

The City reserves the right to reject any or all Bids in whole, or in part, or to waive irregularities not affecting substantial rights.

General or evasive replies will be considered grounds for rejection of the Bid as incomplete. The successful Bidder may be required to appear before the City Council and submit satisfactory evidence that he or she has the necessary capital and is qualified and prepared to prosecute the work to the full satisfaction of the Engineer.

The City also reserves the right to reject any Bid which is 10 percent greater or 20 percent less than the Engineer's estimate or any Bid which contains item bids which vary more than 30 percent plus or minus from the Engineer's item bid estimate.

6. Payments by Contractor

6.1 Wages

It is agreed that if this project qualifies under Oregon law as a prevailing wage rate public works project, each worker in each trade or occupation employed in the performance of this Contract either by the Contractor, Subcontractor or other person doing or contracting to do or contracting for the whole or any part of the work on the Contract, must be paid not less than the applicable prevailing wage rate. If this project contains both federal and state funds, the hourly wages shall be not less than the higher of the state or the federal amount of the prevailing rate of wage. Prevailing wage rate payments include fringe benefits, for each trade or occupation in the locality where such labor or work is performed, as determined by the commissioner, in which the workers are employed. The existing rate of wage is the rate, in effect at the time the initial specifications were first advertised for bid solicitations as determined by the Commissioner of the Bureau of Labor and Industries under ORS279C.815.

If any dispute arises as to what is the prevailing rate of wage for the same trade or occupation in the locality and if that dispute cannot be settled by the parties involved, the dispute may be referred to the Commissioner of the Bureau of Labor and Industries, who shall then determine the prevailing rate of wage for the same trade or occupation in the locality.

It shall be the responsibility of the Contractor and any Subcontractor to post the prevailing wage rates on

the job site in a conspicuous place which is accessible to employees and must remain posted for the duration of the job.

6.2 Certification

No Bid will be received or considered by the City unless the Bid contains a statement by the Bidder as part of the Bid that the Bidder shall comply with provisions regarding prevailing rates of wages required by ORS 279C.840.

CITY OF SPRINGFIELD
PUBLIC IMPROVEMENT CONTRACT

FOR USE WITH OREGON STANDARD SPECIFICATIONS FOR CONSTRUCTION

PROJECT # _____

Dated:

Parties: City of Springfield "CITY"
A Municipal Corporation of the State of Oregon
225 5th Street
Springfield, OR 97477

and

"Contractor"

Additional Contractor Information:

a) Type of Entity: ☐ Sole Proprietorship ☐ Partnership ☐ Limited Liability Comp ☐ Corporation

b) Address:

c) Telephone:

d) Fax No:

e) If Applicable, Listed among the Parties Excluded from Federal Procurement or Non-Procurement Programs found at: https://www.sam.gov/portal/public/SAM/: ☐Yes ☐ No

City Account Number(s) To Be Charged (Include Percentages):

Account Number	Percentage

RECITALS

Contractor was the successful bidder for the contract for the construction of the public improvement project described in the plans and specifications for the project that were included in the bid documents and the 2021 Oregon Standard Specifications for Construction, issued by the Oregon Department of Transportation, as modified by the City's Amendments to the Specifications for the Project and any other Supplemental Specifications and Special Provisions included in the Bid Documents (all specifications, plans, Standard Drawings, Supplemental Specifications and Special Provisions included in the Contract are collectively referred to herein as the "Specifications") which form a part of the Contract.

SAMPLE

AGREEMENT

1. **The Contract.** The Contract between the City and Contractor (the "Contract") includes this Document and its exhibits, together with all of the documents and materials included in the definition of the "Contract Documents" in 00110.20 of the Specifications. In addition, the Contract between the City and Contractor shall be deemed to incorporate all reports, records, laws, rules and orders referenced in the Contract documents.

   This Document includes and incorporates the following Exhibits:
   Exhibit A - Solicitation Documents.

2. **Definitions**. Unless otherwise specifically defined in this Document, all capitalized terms which are not proper nouns shall have the meanings assigned thereto in the Specifications.

3. **Project.** The project is generally described as:

   [Add project description here]

4. **Work to be Performed.** Contractor agrees to furnish all services, labor, materials and equipment for and to construct the improvement listed above (the "Project"), according to the Bid Documents ("the Work") and according to the provisions of the Contract. All parts of the Work are the sole responsibility of Contractor.

5. **Time of Commencement and Completion**. Time is of the Essence of the Contract. The time in which Contractor shall commence, prosecute and complete the Work is described in Section 00180 of the Specifications.

6. **Contract Amount.** The Contract Amount is $_____ and consists of unit prices bid by Contractor multiplied by estimated quantities, together with lump sum amounts for portions of the Work, as described on Contractor's Bid attached hereto. The actual sum payable to Contractor for the Work shall be based on lump sum amounts and actual quantities, as modified by Change Orders and adjustments made in accordance with the Specifications. Payment will be made as provided in the Specifications.

7. **Indemnification and Hold Harmless.** To the fullest extent permitted by law, Contractor shall indemnify, defend (with counsel approved by City) and hold harmless the parties as described in 00170.72 of the Specifications.

8. **Insurance.** Contractor shall maintain in force for the duration of the Contract the insurance coverages specified in 00170.70 of the Specifications. Each policy required by these provisions shall be written as a primary policy, not contributing with or in excess of any coverage which City may carry. Unless otherwise specified, each policy shall be written on an "occurrence" form with an admitted insurance carrier licensed to do business in the state of Oregon. In the event the statutory limit of liability of a public body for claims arising out of a single accident or occurrence is increased above the combined single limit coverage requirements specified below, City shall have the right to require Contractor to increase Contractor's coverages by the amount of the statutory limit increase for such claims and to increase the aggregate coverage by an amount that is

SAMPLE

twice as large as the statutory increase. The adequacy of all insurance required under the Contract shall be subject to approval by City's Risk Manager. Failure to maintain any insurance coverage required by the Contract shall be cause for immediate termination of the Contract by City.

8.1. Evidence of Insurance Coverage. Evidence of the required insurance coverages issued by an insurance company satisfactory to the City shall be provided to the City by way of a City approved certificate of insurance before any work or services commence.

8.2. Notice of Cancellation or Material Change in Coverage. The certificate of insurance shall contain a requirement that the Insurance company notify the City 30 days prior to any cancellation or material change in coverage. If the approved insurance company will not provide this 30 day notice, the Contractor shall provide written notice to the City contract manager within two days after the Contractor becomes aware that their coverage has been canceled or has been materially changed. The Contractor shall either fax 541-726-3782 said notice or email it directly to City Finance Department at purchasing@springfield-or.gov. Regardless of what circumstances cause Contractor's insurance coverage to cease or be modified, it is the Contractor's responsibility to notify the City. Failure to maintain proper insurance or provide notice of cancellation or modification shall be grounds for immediate termination of this contract.

9. Performance and Payment Bonds. Prior to the commencement of the Work, Contractor shall provide good and sufficient performance and payment bonds as described in 00130.40 of the Specifications for approval by City and in the form of the bonds included in the Solicitation Documents.

10. Termination and Suspension. City may terminate the Contract or suspend the Work at any time as provided in 00180 of the Specifications.

11. Nonresident Contractors.

11.1. When a public contract is awarded to a nonresident bidder and the contract price exceeds $10,000, the bidder shall promptly report to the Department of Revenue on forms to be provided by the department the total contract price, terms of payment, length of contract and such other information as the department may require before the bidder may receive final payment on the public contract. The contracting agency shall satisfy itself that the requirement of this subsection has been complied with before the contracting agency issues a final payment on a public contract.

11.2. As used in this paragraph, "nonresident contractor" means a contractor that: (A) has not paid unemployment taxes or income taxes in the state of Oregon during the 12 calendar months immediately preceding submission of the bid for the contract, (B) does not have a business address in this state and (C) stated in the bid for the contract that it was not a "resident bidder" under ORS 279A.120.

12. Default; Remedies. Upon Contractor's default or if in the public interest, City may terminate the Contract and take all other remedial actions available to City, as further specified in the 00180.90 of the Specifications. Without limiting the City's right to

SAMPLE

disqualify Contractor pursuant to ORS279C.440, if Contractor willfully violates any of the provisions of sections EC 4.615 to 4.650 of The Eugene Code, 1971 or any of the provisions of State law or City's administrative rules governing public contracts, or if Contractor knowingly files false affidavits or certificates of compliance required under the Contract, Contractor shall waive for a period of one year any right to bid upon any public improvement project let by City. City's claims for damages and any other equitable relief available to City resulting from Contractor's breach shall survive a termination of the Contract.

13. **Liquidated Damages.** In the event the Work is not completed within the contract time as specified in the Contract, Contractor shall pay to City liquidated damages, as further specified in 00180.85 of the Specifications. [Note to City staff – must determine amounts in Special Provisions for each contract or omit this language.]

14. **Notices**. Any written notices permitted or required by the Contract shall be delivered according to 00150.30 of the Specifications to the attention of the representatives of the parties set for below, or such other address and/or numbers as either party may provide to the other by notice given in accordance with this provision.

    Contractor: [Add contractor name, address, phone, fax or email]

    City: [City staff name and email, address, phone number]

15. **Contract Documents; Interpretation.** Where possible, all parts of the Contract shall be interpreted in a manner that avoids conflict between the various documents and their provisions. In the event that any provision of this Document conflicts with any provision of the Specifications, the discrepancy will be resolved in the order of precedence in 00150.10 of the Specifications.

16. **Dispute Resolution.** All disagreements, protests, and claims relating to the Contract, including claims for additional compensation and time for performance and completion of the Work, must be resolved according to section 00199 of the Specifications.

17. **Venue & Choice of Law.** The Contract shall be governed by and interpreted in accordance with the laws of the State of Oregon without regard to principles of conflict of laws. If federal funding is included in the Contract, applicable Federal requirements govern in the event of conflicts among Federal, State and local laws. Any dispute between the Agency and the Contractor that arises from or relates to this Contract and is not resolved under the provisions of 00199 of the Specifications, shall be brought in the forum described in 00170.00.

18. **Force Majeure.** If Contractor is delayed by reason of weather, fire, riot, strikes, acts of God or other circumstances beyond Contractor's reasonable control, City may terminate this Agreement in writing to Contractor after determining such delay or default will unreasonably prevent successful performance of the Contract. If City elects not to terminate the Contract, Contractor will be entitled to additional time to complete the Contract equal to that lost by an or all of the above causes.

19. **Severability.** If any provision of this Agreement is declared by a court to be illegal or in conflict with any law, the validity of the remaining terms and provisions will not be

SAMPLE

affected; the rights and obligations of the parties will be construed and enforced as if the Agreement did not contain the particular provision held to be invalid.

20. **Waiver.** Failure of City to enforce any provision of this Agreement shall not constitute a waiver or relinquishment by City of the right to such performance in the future nor of the right to enforce any other provision of this Agreement.

21. **Amendments.** The terms of this Agreement shall not be waived, altered, modified, supplemented or amended in any manner whatsoever, without prior written approval of City. No modification of this Agreement shall bind either party unless reduced to writing and subscribed by both parties, or ordered by a Court.

22. **Assignment/Subcontract.** Contractor shall not assign, sell, transfer, subcontract or sublet rights, or delegate responsibilities under this Agreement, in whole or in part, without the prior written approval of City. No such written approval shall relieve Contractor of any obligations of this Agreement, and any transferee or subcontractor shall be considered the agent of Contractor. Contractor shall remain liable as between the original parties to this Agreement as if no such assignment had occurred.

23. **Compliance with All Government Regulations.** Contractor shall comply with all Federal, State and local laws, codes, regulations and ordinances applicable to the work performed under this Agreement. Failure to comply with such requirements shall constitute a breach of contract and shall be grounds for termination of this Agreement. Damages or costs resulting from noncompliance shall be the sole responsibility of Contractor. This section includes, but is not limited to, compliance with all applicable requirements of Federal and State civil rights statutes, rules, and regulations, and all applicable provisions of the Americans with Disabilities Act of 1990, 42 USC Section 12101 et seq. and Section 504 of the Rehabilitation Act of 1973.

24. **Construction of Agreement.** This Contract shall not be construed more favorably to City due to the preparation of this Contract by City. The headings and subheadings in this Contract are for convenience, do not form a part of this Contract, and shall not be used in construing this Contract.

25. **Entire Agreement.** This Agreement signed by both parties is the parties' final and entire Agreement and supersedes all prior and contemporaneous oral or written communications between the parties, their agents and representatives. There are no representations, promises, terms, conditions or obligations other than those contained herein.

26. **Third Party Beneficiaries.** The parties to the Contract do not intend to confer on any third party any rights under the Contract, except as otherwise described in 00170.79 of the Specifications. All Subcontractors are third parties.

27. **Survival**. Any obligation arising under the Contract which is not, or cannot be performed or paid prior to the expiration or termination of the Contract, including, but not limited to, all provisions concerning the quality of the Work, warranties and obligations for payment, indemnification, and reimbursement, shall survive termination or expiration of the Contract.

SAMPLE

CITY OF SPRINGFIELD:		CONTRACTOR:	
By:	_____	By:	_____
Name:	_____	Name:	_____
Title:	_____	Title:	_____
Date:	_____	Date:	_____
	_____		_____

SAMPLE

City of Springfield Public Contract Addendum
Required Contract Terms Under ORS 279B – Goods, Services, and Personal Services

Pursuant to Oregon law, this public contract includes the following terms and conditions, when applicable:

1. The contractor must make payment promptly, as due, to all persons supplying to the contractor labor or material for the performance of the work provided for in the contract. ORS 279B.220(1).

2. The contractor must pay all contributions or amounts due the Industrial Accident Fund from the contractor or subcontractor incurred in the performance of the contract. ORS 279B.220(2).

3. That contractor must not permit any lien or claim to be filed or prosecuted against the state or a county, school district, municipality, municipal corporation or subdivision thereof, on account of any labor or material furnished. ORS 279B.220(3).

4. The contractor must pay to the Department of Revenue all sums withheld from employees under ORS 316.167. ORS 279B.220(4).

5. If the agreement is for lawn and landscape maintenance, Contractor must salvage, recycle, compost or mulch yard waste material at an approved site, if feasible and cost-effective. ORS 279B.225.

6. The contractor must promptly, as due, make payment to any person, co-partnership, association or corporation furnishing medical, surgical and hospital care services or other needed care and attention, incident to sickness or injury, to the employees of the contractor, of all sums that the contractor agrees to pay for the services and all moneys and sums that the contractor collected or deducted from the wages of employees under any law, contract or agreement for the purpose of providing or paying for the services. All employers shall comply with ORS 656.017. ORS 279B.230.

7. A person may not be employed for more than 10 hours in any one day, or 40 hours in any one week, except in cases of necessity, emergency or when the public policy absolutely requires it, and in such cases, except in cases of contracts for personal services designated under ORS 279A.055, the employee shall be paid at least time and a half pay:
   a. For all overtime in excess of eight hours a day or 40 hours in any one week when the work week is five consecutive days; or
   b. For all overtime in excess of 10 hours in any one day or 40 hours in any one week when the work week is four consecutive days, Monday through Friday; and
   c. For all work performed on Saturday and on any legal holiday specified in ORS 279B.020.

8. An employer must give notice in writing to employees who work on a public contract, either at the time of hire or before commencement of work on the contract, or by posting a notice in a location frequented by employees, of the number of hours per day and days per week that the employees may be required to work. ORS 279B.235(1)-(2).

9. If the agreement is for personal services, the contract shall contain a provision that the employee shall be paid at least time and a half for all overtime worked in excess of 40 hours in any one week, except for individuals under personal services contracts who are excluded under ORS 653.010 to 653.261 or under 29 U.S.C. 201-209 from receiving overtime. ORS 279B.235(3).

10. If the contract is for services, persons employed under contracts shall receive at least time and half pay for work performed on the legal holidays specified in a collective bargaining agreement or in ORS 279B.020(1)(b)(B)-(G) and for all time worked in excess of 10 hours in any one day or in excess of 40 hours in any one week, whichever is greater. Contractor shall give notice in writing to employees who work on a contract for services, either at the time of hire or before commencement of work on the contract, or by posting a notice in a location frequented by employees, of the number hours per day and days per week that the employees may be required to work. ORS 279B.235(5).

SAMPLE

PREVAILING WAGE RATE INFORMATION

Prevailing Wage Rates information can be found at the following website:

https://www.oregon.gov/boli/WHD/PWR/Pages/PWR-Rate-Publications---2019.aspx

For the proper Prevailing Wage Rates applicable to this project please refer to the following publications:

1.) *Prevailing Wage Rate Publication; Prevailing Wage Rates for Public Works Contracts in Oregon with an effective date of July 1st, 2022.*

The following Amendments to the Prevailing Wage Rates for Public Works Contracts in Oregon also apply;

a.) Occupation and Premium/Differential Pay for Ironworkers, effective October 1st, 2022.

Special Provisions - Scope of Work

P21172- ASTER ST RAMPS
P21182 – MEADOW PARK RAMP

1. GENERAL

1.1 Project Description

Work consists of the of curb ramp improvements to the Meadow Park walkway off H St and the Aster St curb ramps at 58th St.

1.2 Cooperation with Utilities

Utility Information (No Anticipated Relocations) – The Contractor shall contact those Utilities having buried facilities and request that they locate and mark them for their protection before construction.

Utility	**Contact's Name** **Address** **Email** **Phone Number**
Comcast	Gabriel Norbury 2871 Chad Drive Eugene, OR 97408 Grabriel_Norbury@cable.comcast.com 541-731-1498
SUB Electric	Dan Norland 1001 Main St Springfield, OR 97477 DanN@subutil.com 541-744-3784
Lumen	Luke Pilon 1762 W 2nd Ave Eugene, OR 97402 Luke.Pilon@lumen.com 458-221-7430
NW Natural	Monte Brown 790 Goodpasture Island Rd Eugene, OR 97402 Monte.Brown@nwnatural.com 541-954-1255
SUB Water	Keoki Lapina 202 South 18th St Springfield, OR 97477 KeokiL@subutil.com 541-736-3291

The Contractor shall notify, in writing, the Utilities listed above, with a copy to the Engineer, at least 14 Calendar Days before beginning Work of the Project.

NW Natural

In the event of an emergency, and in addition to the calls required by the Utilities notification system, the Contractor shall call:

- Northwest Natural Gas 1-800-882-3377

SUB Electric

Contact SUB Electric Operations at 541-744-3784 at least 72 hours prior to any work or equipment encroaching within 20 feet of electrical lines. At certain locations, power, light, and telephone poles may interfere with excavation and operation of the Contractor's equipment. Coordinate with SUB Electric Operations 72 hours prior about supporting poles. The cost to support poles will be paid by the City of Springfield and shall not be included in the Contractor's cost.

Lumen

Contact Lumen at 458-221-7430 at least 72 hours prior to any work or equipment encroaching within 10' of communication lines.

SUB Water

Contact SUB Water Operations at 541-736-3291 at least 10 days prior to beginning work within 10 feet of **all** water facilities. SUB Water requires all construction at or near 12" or larger waterlines to have an on-site safety watcher at no cost to the Contractor. Contact SUB Water to request an on-site safety watcher at least 48 hours prior to construction. SUB Water also requires light compaction/no vibratory compaction with 2 feet directly above SUB water facilities. Waterline facilities are shallow, proceed with caution and direction from on-site watcher.

1.3 Construction Zone Work Hours

Unless otherwise directed by the Engineer, normal construction work zones with active project operations are to be conducted Monday through Friday. Work outside the hours of 7:00 a.m. to 7:00 p.m. is not permitted unless the City Engineer or designee gives approval.

1.4 Record Drawings

Contractor shall maintain at the site one set of specifications, full size drawings, shop drawings, equipment drawings and supplemental drawings which shall be corrected as the work progresses to show all changes made, Drawings shall be available for inspection by the Engineer. Upon completion of the contract and prior to final payment, specifications and drawings shall be turned over to the Engineer.

1.5 Competent Person Designation

Contractor shall designate a qualified and experienced "competent person" at the site whose duties and responsibilities shall include enforcement of Oregon - OSHA regulations regarding excavations, the prevention of accidents, and the maintenance and supervision of construction site safety precautions and programs.

1.6 Vehicle Parking

The vehicles of the Contractor's and subcontractors' employees shall be parked in accordance with local parking ordinances.

1.7 Survey Services

The City of Springfield shall provide survey services as required and as described in Section 00150.15 of the City of Springfield Standard Construction Specifications.

1.8 Prosecution and Progress - Project Work Schedules

The contractor shall submit a Type "A" schedule according to 00180.41(a) of the City of Springfield Standard Construction Specifications.

SECTION 00210 - MOBILIZATION

Comply with Section 00210 of the Standard Specifications.

SECTION 00220 - ACCOMMODATIONS FOR PUBLIC TRAFFIC

Comply with Section 00220 of the Standard Specifications modified as follows:

Add the following subsections:

00220.03(a) Over-Dimensional Vehicle Restrictions - Replace this subsection, except subsection number and title, with the following:

00220.03(c) Public Notice – The Contractor will need to provide written communication to all properties adjacent to the work a minimum of 5 Calendar Days before work begins. Any notifications and communications the Contractor intends to send to neighboring properties need to be reviewed and approved by the City of Springfield, Contract Analyst, Amanda Clinton (aclinton@springfield-or.gov), five days prior to distribution.

In addition, the Contractor will also need to provide the City of Springfield with all written notifications they intend to utilize for residents and businesses who will have their access interrupted by construction a minimum of 48 hours before flyer distribution for review and approval. Please send to Contract Analyst Amanda Clinton (aclinton@springfield-or.gov). The Contractor will need to coordinate all work activities with Lane Transit District, Eugene-Springfield Fire, Springfield Police, local sanitation services, and USPS when applicable.

00220.03(d) Bus Stops – Notify in writing, with a copy to the Engineer, a minimum of 7 Calendar Days before performing any Work that requires closing or relocating an LTD bus stop.

When the Project restricts the width, length, height, or weight of vehicles through a work zone or detours trucks around a work zone, fill out and submit a completed copy of the "Highway Restriction Notice - Size and/or Weight" form (Form No. 734-2357), available from the ODOT

Oregon Trucking Online website (see 00110.05(e)), at least 35 Calendar Days before the restriction or detour takes effect.

00220.40(e)(1) Closed Lanes - Replace this subsection, except for the subsection number and title, with the following:

Traffic Lanes may be closed on Aster St when allowed, shown, or directed during the following periods of time except as specified in 00220.40(e)(2):

Daily, Monday through Friday, between 7:00 a.m. and 7:00 p.m.

Traffic Lanes may be closed on H St when allowed, shown, or directed during the following periods of time except as specified in 00220.40(e)(2):

Daily, Monday through Friday, between 7:00 a.m. and 7:00 p.m.

Single Lane Closures – One Traffic Lane on Aster St may be closed during the following times:

- Daily, Monday through Friday, between 7:00 a.m. and 7:00 p.m.

One Traffic Lane on H St may be closed during the following times:

Daily, Monday through Friday, between 7:00 a.m. and 7:00 p.m.

SECTION 00221 - COMMON PROVISIONS FOR WORK ZONE TRAFFIC CONTROL

Comply with Section 00221 of the Standard Specifications modified as follows:

00221.03 Traffic Safety and Operations - Replace the bullet that begins “When paving operations create…” with the following bullet:

- When paving operations create an abrupt or sloped edge drop off greater than 1 inch, protect traffic by installing signing according to the "2 Lane, 2 Way Roadway Overlay Area" detail shown on the Standard Drawings. Protect longitudinal and transverse Pavement joints by placing and maintaining an asphalt concrete wedge according to 00221.07(c)(1).

00221.07(c)(1) Paving - Replace this subsection, except subsection number and title, with the following:

When the longitudinal joint is greater than 1 inch in height, install additional TCD according to 00221.03. Complete the placing of ACP and construction of paving joints according to 00735.48, 00735.49, 00743.45, 00744.44, 00744.45, 00745.47, and 00745.48, as applicable.

00221.90(b) Temporary Protection and Direction of Traffic - Delete the bullet that begins “Moving temporary barrier to and from Contractor’s stockpile areas”.

Replace the bullet that begins "When the Schedule of Items does not include …" with the following bullet:

- Preparing and signing the daily “Traffic Control Inspection Report”, when a TCS is not included in the Schedule of Items or when a TCS is not onsite for a work shift.

SECTION 00280 - EROSION AND SEDIMENT CONTROL

Comply with Section 00280 of the Standard Specifications modified as follows:

00280.06 Erosion and Sediment Control Manager - Delete this subsection.

00280.15(d) Temporary Slope Drains – Replace this subsection, except subsection number and title, with the following:

Furnish either plastic pipe and flared end sections meeting the requirements of Section 02415 or metal pipe and flared end sections meeting the requirements of Section 02420.

00280.16(i) Concrete Washout – Replace this subsection, except subsection number and title, with the following:

Furnish concrete washout materials meeting the following requirements:

- **Field fabricated concrete washout basins:**

  - **Straw Bales** - Standard rectangular straw bales, with straw material meeting the requirements of 01030.15, except no certification is required.
  - **Plastic Sheeting** - Minimum 10-mil thick polyethylene plastic sheeting.
  - **Staples** - 1/8-inch diameter steel wire staples. 2-inch "U" width with a length of 6 inches minimum

- **Prefabricated Concrete Washout** – Waterproof and leak proof prefabricated concrete washout basins sized to accommodate concrete washout functions with no overtopping or spillage.

00280.62 Inspection and Monitoring - Replace this subsection, except for the subsection number and title, with the following:

Inspect the Project Site and all ESC devices for potential erosion or sediment movement on a weekly basis and when 1/2 inch or more of rainfall occurs within a 24-hour period, including weekends and holidays.

If a significant noncompliance or serious water quality issue occurs that could endanger health or the environment, verbally report it to the Engineer within 24 hours.

00280.90 Payment - In the paragraph that begins "Item (a) includes...” delete the bullet that specifies "providing the Erosion and Sediment Control Manager".

SECTION 00290 - ENVIRONMENTAL PROTECTION

Comply with Section 00290 of the Standard Specifications.

SECTION 00310 - REMOVAL OF STRUCTURES AND OBSTRUCTIONS

Comply with Section 00310 of the Standard Specifications modified as follows:

00310.90 Payment - Add the following to the end of this subsection:

No separate or additional payment will be made for removal or disposal Work included in Section 00330 according to 00310.02.

00310.92 Separate Item Basis Delete the following Pay Item from the Pay Item list:

(g) Asphalt Pavement Saw Cutting……..…….Foot

Add the following:

No separate or additional payment will be made for saw cutting.

SECTION 00440 - COMMERCIAL GRADE CONCRETE

Comply with Section 00440 of the Standard Specifications modified as follows

00440.12 Properties of Commercial Grade Concrete - Replace the bullet that begins "**Slump** - 5 inches…" with the following bullets:

- **Slump** - 5 inches or less
  - For concrete sidewalks, ramps, driveways, or other hand finished surface applications, and when using a high range water reducing admixture, provide a slump of 8 inches or less as approved by the Engineer.

00440.13 Field-Mixed Concrete - Replace the subsection, except for subsection number and title, with the following:

CGC Work items listed in 00440.14(a) may be field-mixed conventionally, or by volumetric/mobile mixers conforming to ASTM C685. When approved, concrete sidewalks, concrete curb ramps, concrete driveways, and other flat concrete surfaces may be field-mixed using volumetric/mobile mixers conforming to ASTM C685, request approval prior to placement. For all other CGC applications, submit written request to the Engineer for approval to use volumetric/mobile mixers conforming to ASTM C685 at least 21 Days prior to placement.

Pre-packaged dry blended concrete from the QPL may be used for Work items listed in 00440.14(a).

00440.40(b) Placing - Add the following bullet to the end of the bullet list:

- When haul time or placement conditions warrant exceeding the time of discharge, submit a detailed breakdown of the estimated time needed from batching to discharge of a load along with the measures that will be taken to ensure slump, temperature and uniformity will be maintained. Submit in advance to establish a new time limit at the Engineer's discretion.

SECTION 00490 - WORK ON EXISTING SEWERS AND STRUCTURES

Comply with Section 00490 of the Standard Specifications.

SECTION 00744 - ASPHALT CONCRETE PAVEMENT

Comply with Section 00744 of the Standard Specifications modified as follows:

00744.11(a) Asphalt Cement - Add the following to the end of this subsection:

Provide 64-22 grade asphalt cement for this Project.

00744.13 Job Mix Formula Requirements - Add the following to the end of this subsection:

Level 2, ½ ACP Mixture shall be the Lane County 2022 Approved Mix.

00744.49 Compaction - Replace the paragraph that begins "After the ACP has been…" with the following paragraph:

After the ACP has been spread, struck off, and surface irregularities and other defects remedied, roll it uniformly until compacted to a minimum of 90 percent of MAMD for local roads and 92 percent of MAMD for collector and arterial roads. Perform finish rolling and continue until all roller marks are eliminated.

Add the following subsection:

00744.51 Opening Sections to Traffic - Schedule work so that, during the same shift, the surfaces being paved are paved full width and length through the wearing Course before opening to traffic.

SECTION 00748 - ASPHALT CONCRETE PAVEMENT REPAIR

Comply with Section 00748 of the Standard Specifications.

SECTION 00759 - MISCELLANEOUS PORTLAND CEMENT CONCRETE STRUCTURES

Comply with Section 00759 of the Standard Specifications modified as follows:

00759.03 Required Submittals - Replace this subsection, except for the subsection number and title, with the following:

Material ordered or Work done before the Engineer reviews and returns the documents shall be at the Contractor's risk.

Submit the following:

(a) ADA Certification for Contractors - For all supervisory personnel who directly supervise the curb ramp Work, submit the names, telephone numbers, and copies of the ODOT ADA Certification for Contractors at least 10 Calendar Days before the preplacement conference.

(b) Curb Ramp Work Plan - Do not begin any curb ramp Work before the plan for completing the Work has been approved. At least 21 Calendar Days before the curb ramp Work is scheduled to begin, submit a plan for accomplishing all phases of the curb ramp Work, including but not limited to the following (also see 00180.41):

- Surface preparation
- Comply with Working Drawings and details submitted under 00759.03(a)
- Compliance with current Standard Drawings and Plans
- Waste handling and disposal

(c) Working Drawings - At least 10 Calendar Days before the construction of a grouping of one or more curb ramp location(s), not to exceed 32 ramps unless otherwise approved under 00180.41, submit unstamped Working Drawings according to 00150.35. Include field verification of each ramp site, and all dimensions, slopes and grades necessary to demonstrate compliance with the Standard Drawings and Plans. Marked up Supplemental Drawings, if field verified, may be submitted as Working Drawings. Notify the Engineer of any deficiencies or noncompliance with the Standard Drawings or Plans. The Engineer will provide additional or modified Plans as needed. Do not begin Work at a curb ramp until submittals for that curb ramp have been received, reviewed, and accepted in writing by the Engineer.

After submittal of the unstamped Working Drawings, according to 00150.35 a site visit may be requested by the Contractor or Engineer. The site visit will include a review of any field markings and discuss the submitted unstamped Working Drawings. The Engineer will provide additional or modified information, as needed.

Include the following in the Working Drawings:

- Verification of elevations, slopes, grades and dimensions necessary to demonstrate compliance with the Standard Drawings and Supplemental Drawings,
- Verification of potential utility conflicts or other street furnishings that may require relocation or adjustment.
- Identification of infeasibilities or constructability issues with the Standard Drawings and Supplemental drawings.

(d) Corrective Action Plan - Unless otherwise approved, notify the Engineer before performing corrective action. Include TPAR necessary to complete corrective action work.

At least 21 Calendar Days before concrete Structures Work is scheduled to begin, submit a corrective action plan. The corrective action plan shall address procedures to correct deficient Structures through minor corrective action or replacement according to 00759.55(a), and include:

- List of minor corrective actions that will be used to correct deficiencies, according to 00759.50 and 00759.55.
- Procedures for performing corrective action.
- Proposed concrete grinding Equipment and method of grinding.
- Proposed concrete repair Material used for resurfacing ground concrete surfaces according to Section 02015.
- Construction activities, Equipment and staging necessary to complete corrective action Work.

The Engineer will review the corrective action plan(s) and provide a response to the Contractor within 5 Days after receiving the plan. Do not begin concrete Structure Work until the corrective action plan is approved by the Engineer.

00759.04 Preplacement Conference - Replace this subsection, except for the subsection number and title, with the following:

Before beginning any curb ramp Work, meet with the Contractor's ODOT ADA Certified supervisory personnel and any quality control personnel if applicable, any curb ramp Subcontractors' supervisory personnel, and the Engineer at a mutually agreed upon time.

If the Contractor's personnel change, or if the Contractor proposes a significant revision to the plan for accomplishing the curb ramp Work, the Engineer may require additional preplacement conferences. If the Contractor’s schedule of work identifies multiple groups of curb ramp construction, as allowed by 00180.41, additional preplacement conferences may be required for each ramp group, at a mutually agreed upon time before Work begins.

All supervisory personnel who have an active ODOT ADA Certification for Contractors and directly supervise the curb ramp Work are required to attend the preplacement conference.

Add the following subsection:

00759.23 Concrete Resurfacing Equipment - Furnish power-operated scarifying Equipment capable of uniformly removing and preparing the existing surface to depths required. For concrete grinding operations, furnish 12 segment grinders, fine-toothed scarifying Equipment, or other approved grinding Equipment.

00759.31 Qualifications - Add the following sentence to the end of the paragraph:

Provide onsite supervisory personnel that are ODOT ADA Certified during construction of the curb ramps.

00759.46 Concrete - Replace this subsection, except for the subsection number and title, with the following:

Construct the Structures between suitable forms or by the extrusion method. Place concrete according to the Plans, Section 00440, and this Section.

00759.50(a) General - Add the following paragraphs to the end of this subsection:

Install truncated domes as shown. Place according to the manufacturer's recommendation. Install abutting truncated dome panels with no more than 1/4 inch spacing. Install anchors along cut edges of truncated dome panels according to manufacturer's recommendations.

In addition, finish concrete surfaces of Structures to be within the established Slopes and dimensions allowed by the Standard Drawings and Plans. Repair or remove and replace Structures not meeting the Standard Drawings and Plans at no additional cost to the Agency.

00759.50(c) Driveways, Walks, and Surfacings - Replace this subsection, except for the subsection number and title, with the following:

Prevent segregation of the concrete during placement. Strike-off the concrete to the grade shown, and float the surface smooth. After the water sheen disappears, edge the joints and remove edging tool marks prior to final finishing. Lightly cross-broom the surface to a uniform texture. Do not trowel joints or edges after brooming surface.

The 24 inch smart level will be used to measure driveway and sidewalk cross slopes on the Pedestrian Access Route.

00759.50(d) Curb Ramps - Replace this subsection, except for the subsection number and title, with the following:

Prevent segregation of the concrete during placement. Strike-off the concrete to the grade shown and float the surface smooth. After the water sheen disappears, edge the joints and remove edging tool marks prior to final finishing. Lightly cross-broom the surface to a uniform texture. Do not trowel joints or edges after brooming surface.

The 6 inch smart level will be used to measure curb running slope. The 6 inch smart level will be used to measure slopes on portions of the curb ramp, gutter pan, or adjacent surfaces that cannot accommodate a 24 inch smart level. All other curb ramp locations will use a 24 inch smart level to measure slopes.

Add the following subsection:

00759.55 Correction of Deficient Structures - Unless otherwise approved, notify the Engineer before performing corrective action. Correct deficiencies at no additional cost to the Agency. Perform corrective actions as directed, according to the approved corrective action plan, and according to the following:

(a) Minor Corrective Action - Submit Equipment and procedure for minor corrective action to the Engineer for approval. Minor corrective action can be performed to correct a deficiency up to 1 square foot per panel. Corrective action exceeding 1 square foot per panel requires

removal and replacement according to 00150.25. Perform minor corrective action according to the following:

(1) Concrete Grinding - Grinding to correct high area deficiencies is limited to 3/16 inch. Use equipment meeting the requirements of 00759.23. Resurface all ground concrete surfaces according to 00759.55(a)(2).

(2) Concrete Resurfacing - Resurfacing to correct low area deficiencies is limited to 3/16 inch depth. Existing concrete is to be at least 7 Days old prior to resurfacing. Resurface repair areas according to the following:

a. **Keyway** - Sawcut a keyway at the boundaries of repair areas that are not already defined by panel control joints. Sawcut shall be 1/8 inch wide and 1/4 inch deeper than the edge of the repair area. Bevel inside edge of keyway at a 45 degree angle.

b. **Surface Preparation** - Prepare limits of repair area by grinding using Equipment from 00759.23. After grinding, sandblast the surface of the repair area. Clean the surface using a low pressure washer, less than 5,000 psi.

c. **Presoak** - Presoak the repair area for a minimum of 30 minutes to saturated surface dry. Prior to resurfacing, ensure there is no ponding water on the surface.

d. **Resurface** - Provide concrete resurfacer from the QPL according to 02015.60; refer to QPL remarks to select an appropriate material based on allowable installation depths. Furnish resurfacer in a color that closely matches the color of surrounding concrete surfaces. Mask boundaries of the repair area. Use hand tools to work resurfacer into keyways and match existing grade at boundaries. Apply a light broom-finish to achieve non-slip surface.

e. **Curing and Return to Traffic** - Wet cure for a minimum of 1 hour or per the manufacturer's recommendation, whichever is more restrictive. Follow manufacturer's recommendation for return to traffic time.

(3) ACP Grinding - Taper grind to match existing Pavement with a minimum grinding width of 1 foot for each 1/4 inch of ACP removed.

(b) Acceptance of Structures - Once the corrective work or replacement has been completed, acceptance will be based on the Engineer's inspection and approval of the Structure.

00759.90 Payment -

In the paragraph that begins "In item (a)…", delete the following sentence "Item (a) includes the curb runs constructed adjacent to the curb ramps."

Replace the paragraph that begins "Item (k) includes the additional Work required …" with the following paragraph:

Item (k) includes the additional Work required to construct a curb ramp or replace an existing curb ramp. Payment for the area of the curb ramp will be made under the concrete walks Pay Item.

Delete the sentence “Aggregate will be paid for according to 00640.90 or 00641.90 as appropriate.”

Replace the paragraph that begins "No separate or additional payment will be…" with the following paragraph and bullet list:

No separate or additional payment will be made for:

- aggregate base used under miscellaneous PCC structures
- curb ramp Working Drawings
- curb ramp plan
- preplacement conference
- concrete form verification
- any necessary repair or removal and replacement of Structures
- providing supervisory personnel who have an active ODOT ADA Certification for Contractors to directly supervise the curb ramp Work
- developing corrective action plans

SECTION 00905 - REMOVAL AND REINSTALLATION OF EXISTING SIGNS

Comply with Section 00905 of the Standard Specifications.

SECTION 00920 - SIGN SUPPORT FOOTINGS

Comply with Section 00920 of the Standard Specifications modified as follows:

00920.80 Measurement - Add the following to the end of this subsection:

The estimated quantities of concrete for minor sign supports are:

Support Type	Quantity
Pipe Breakaway Sign Supports	0.7 cu. yd.

SECTION 00930 - METAL SIGN SUPPORTS

00930.80 Measurement - Add the following to the end of this subsection:

The estimated quantities of structural steel are as follows:

Item	Estimated Quantity

	(Pound)
Minor Sign Supports	
Pipe Breakaway Sign Supports	80

SECTION 01040 - PLANTING

Comply with Section 01040 of the Standard Specifications.

SECTION 02001 - CONCRETE

Comply with Section 02001 of the Standard Specifications modified as follows:

02001.02 Abbreviations and Definitions:

Add the following definition:

Lightweight Concrete - Structural concrete having a specified density using lightweight Aggregates.

Replace the sentence that begins "**Pozzolans** - Fly ash, silica fume…" with the following sentence:

Pozzolans - Fly ash, natural Pozzolans, silica fume, and high-reactivity Pozzolans.

Replace the sentence that begins "**Supplementary Cementitious Materials** - Fly ash, silica fume…" with the following sentence:

Supplementary Cementitious Materials - Pozzolans and ground granulated blast furnace slag.

02001.15(a) Current Mix Designs - Replace this subsection, except for the subsection number and title, with the following:

Mix designs that meet the requirements for the specified class of concrete and are currently being used or have been used within the past 24 months on any project, public or private, may be submitted for review. Provide individual test results that comprise the average if more than one data point exists. For paving designs the flexural strength testing must be from within the last two years. For HPC designs the length change and permeability tests must be from within the last two years.

02001.15(b)(1) Trial Batch Plastic Properties - Replace this subsection, except for the subsection number and title, with the following:

For each trial batch, test according to the following test methods:

Test	Test Method
Sampling Fresh Concrete	WAQTC TM 2
Concrete Temperature	AASHTO T 309
Slump	AASHTO T 119 [1]
Air Content	AASHTO T 152 or T 196 [2]
Density	AASHTO T 121
Yield	AASHTO T 121
Molding Concrete Specimens	AASHTO T 23 or R 39 [3]
Water Cement Ratio	[4]

[1] For drilled shaft concrete test the slump retention by subsequent tests at 60 minute intervals for the duration of the estimated drilled shaft placement. Report in table or graphical format.
[2] Use AASHTO T 196 for lightweight concrete.
[3] Cast cylinders in single use plastic molds.
[4] Use ODOT's Field Operating Procedure for AASHTO T 121 in the MFTP.

02001.15(c)(10) Plastic Concrete Tests – Replace the bullet that begins "Initial slump test result and subsequent…."

- Initial slump test results and subsequent results at 60-minute intervals, verifying a minimum slump of 4 inches is maintained for the total time estimated for drilled shaft placement, including temporary casing extraction. Report data in a table or graph format.

02001.15(c)(12) Documentation of Average Compressive Strength - Replace this subsection, except for the subsection number and title, with the following:

Provide an analysis, showing applicable data and calculations for documentation of average compressive strength according to ACI 301.

02001.20(a) Strength - Replace Table 2001-1 with the following Table 2001-1:

Table 02001-1

Concrete Strength and Water/Cementitious Material (w/cm) Ratio		
Type of Concrete	**Strength f'_c (psi)**	**Maximum w/cm Ratio**
Structural	3300	0.50
	3300 (Seal)	0.45
	4000	0.48
	4000 (Drilled Shaft)	
	HPC4500	0.40
	HPC(IC)4500	
	5000 +	
Paving	4000	0.44

PPCM's (with cast-in-place decks and no entrained air)	5000	0.48
	5500	0.44
	6000 +	0.42

02001.20(a)(1) Required Average Compressive Strength (f'_{cr}) - Replace this subsection, except for the subsection number and title, with the following:

Except for PPCM designs, provide the required average compressive strength according to ACI 301 for mix design approval.

02001.30(e)(1) HPC Coarse Aggregate Content - Delete the paragraph that begins "Two or more Aggregate products or sources…"

Add the following subsection:

02001.50(d) Concrete Strength Testing Technician (CSTT):

- Receive concrete test cylinders
- Record data
- Strip cylinders
- Store cylinders
- Test cylinders
- Record test data
- Report test data

SECTION 02690 - PCC AGGREGATES

Comply with Section 02690 of the Standard Specifications modified as follows:

02690.20(e) Grading and Separation by Sizes for Prestressed Concrete - Replace this subsection with the following subsection:

02690.20(e) Grading and Separation by Sizes - Sampling shall be according to AASHTO R 90. Sieve analysis shall be according to AASHTO T 27 and AASHTO T 11. Provide aggregates meeting the gradation requirements of Table 02690-1 for structural concrete. Provide a CAgT to perform sampling and testing when required.

Table 02690-1
Gradation of Coarse Aggregates
Percent passing (by Weight)

		Sieve Size											
Size Number	Nominal Size Square Openings	(2½ in.)	(2 in.)	(1½ in.)	(1 in.)	(¾ in.)	(½ in.)	(⅜ in.)	(No. 4)	(No. 8)	(No. 16)	(No. 50)	(No. 200)
3	(2 to 1 in.)	100	90 to 100	35 to 70	0 to 15	—	0 to 5	—	—	—	—	—	**
357*	(2 in. to No. 4)	100	95 to 100	—	35 to 70	—	10 to 30	—	0 to 5	—	—	—	**
4	(1½ to ¾ in.)	—	100	90 to 100	20 to 55	0 to 15	—	0 to 5	—	—	—	—	**
467*	(1½ to No. 4)	—	100	95 to 100	—	35 to 70	—	10 to 30	0 to 5	—	—	—	**
5	(1 to ½ in.)	—	—	100	90 to 100	20 to 55	0 to 10	0 to 5	—	—	—	—	**
56	(1 to ⅜ in.)	—	—	100	90 to 100	40 to 85	10 to 40	0 to 15	0 to 5	—	—	—	**
57	(1 to No. 4)	—	—	100	95 to 100	—	25 to 60	—	0 to 10	0 to 5	—	—	**
6	(¾ to ⅜ in.)	—	—	—	100	90 to 100	20 to 55	0 to 15	0 to 5	—	—	—	**
67	(¾ to No. 4)	—	—	—	100	90 to 100	—	20 to 55	0 to 10	0 to 5	—	—	**
68	(¾ to No. 8)	—	—	—	100	90 to 100	—	30 to 65	5 to 25	0 to 10	0 to 5	—	**
7	(½ to No. 4)	—	—	—	—	100	90 to 100	40 to 70	0 to 15	0 to 5	—	—	**
78	(½ to No. 8)	—	—	—	—	100	90 to 100	40 to 75	5 to 25	0 to 10	0 to 5	—	**
8	(⅜ to No. 8)	—	—	—	—	—	100	85 to 100	10 to 30	0 to 10	0 to 5	—	**
89	(⅜ to No. 16)	—	—	—	—	—	100	90 to 100	20 to 55	5 to 30	0 to 10	0 to 5	**

* Use two or more seperated sizes which when combined meet these gradation limits.

** See 02690.20(a). Do Not evaluate material passing the No. 200 sieve according to 00165.40.

02690.20(f) Grading and Separation by Sizes for Other Concrete - Delete this subsection.

02690.30(g) Grading - In the paragraph that begins “Sampling shall be according to…”, replace the words “AASHTO T 2” with the words “AASHTO R 90”.

CITY OF SPRINGFIELD CONSTRUCTION

PLANS & DRAWINGS

FOR

Project #P21172

Aster Street at South 58th and Meadow Park

CITY OF SPRINGFIELD
DEVELOPMENT & PUBLIC WORKS

Project P21172
ASTER STREET ADA RAMPS

ADA RAMPS

PROJECT LOCATION

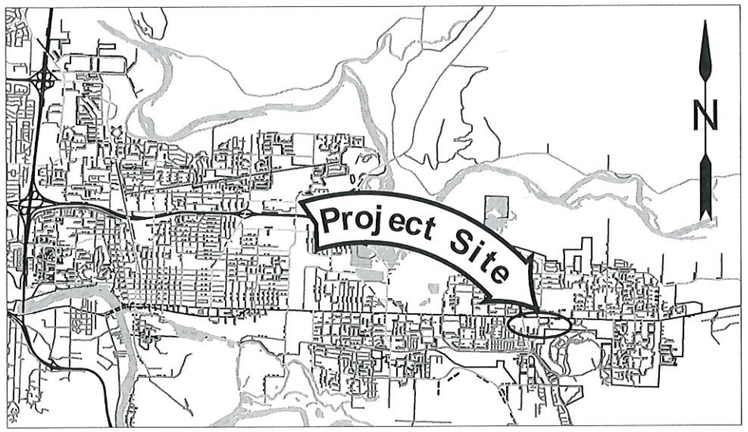

NOTES

1. TOPO PERFORMED WITH THE TRIMBLE S6 TOTAL STATION AND TRIMBLE R8 GPS/RTK BETWEEN 6/6/19 & 6/27/19
2. HORIZONTAL DATUM IS NAD 83/91
3. VERTICAL DATUM IS NAVD88

VICINITY MAP

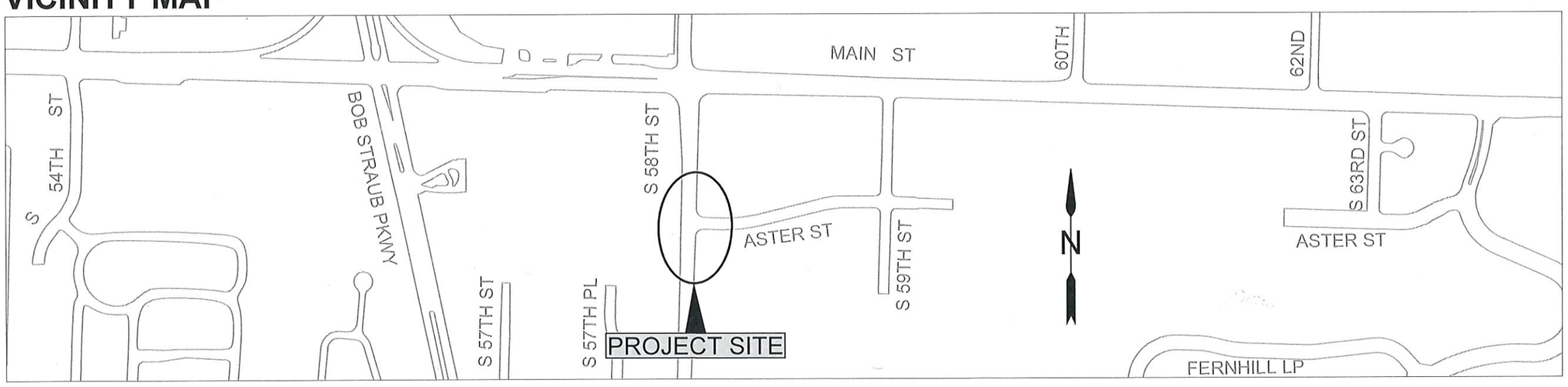

SHEET INDEX

SHEET NO.	DESCRIPTION
A01-A04	TITLE, LEGEND, ABBR., LAYOUT, GEN NOTES
BA01-BA02	CURB RAMP PAY LIMITS
BB01-BB02	CURB RAMP EXCAVATION DETAILS
BC01-BC02	CURB RAMP DESIGN DETAILS
E01-E02	TEMPORARY TRAFFIC CONTROL DETAILS
F01-F02	EROSION AND SEDIMENT CONTROL DETAILS

STANDARD DRAWINGS

DWG NO.	DESCRIPTION
3-8	CURB & GUTTER REMOVAL AND REPLACEMENT
5-18	ROADSIDE SIGN INSTALLATION DETAIL
TM800	TABLES, ABRUPT EDGE AND PCMS DETAILS
TM841	INTERSECTION WORK ZONE DETAILS
TM844	TEMPORARY PEDESTRIAN ACCESS ROUTING
W1.16.1	VALVE LID AND METER BOX CONCRETE COLLARS

No.	Revision/Issue	Date

811
Know what's **below.**
Call before you dig.

UTILITY LOCATIONS ARE APPROXIMATE. THE CONTRACTOR SHALL BE RESPONSIBLE FOR DETERMINING UTILITY LOCATIONS PRIOR TO BEGINNING OF CONSTRUCTION. THESE PLANS MAY NOT SHOW ALL UTILITIES OR THE CORRECT LOCATIONS.

Project P21172
ASTER STREET ADA RAMPS

City of Springfield
PUBLIC WORKS / ENGINEERING
225 FIFTH STREET, SPRINGFIELD, OR 97477
PHONE (541) 726-3753 FAX (541) 726-3689
INTERNET www.springfield-or.gov

SPRINGFIELD OREGON

REGISTERED PROFESSIONAL ENGINEER
54699PE
OREGON
JULY 15, 2003
JEFFREY ALAN PASCHALL

EXP DATE: 12-31-2022

TITLE SHEET

NO SCALE

DRAWN BY: T. GREEN
DESIGNED BY: K. KRUEGER
CHECKED BY: J. PASCHALL

SHEET **A01** OF **14**

October 8, 2021

C:\Users\tgreen\City Of Springfield, OR\DPW-CMD-Engineering - Capital Projects\Projects Folders\STREETS\P21172 Aster St ADA Ramps\02 - Design\Eng Tech Working Folder\P21172 A Sheets.dwg

ABBREVIATIONS

AB	AGGREGATE BASE	DI	DUCTILE IRON	INV	INVERT	RCP	REINFORCED CONCRETE PIPE
ABAN	ABANDON(ED)	DIA	DIAMETER	LAT	LATERAL	RD	ROAD
ACP	ASPHALTIC CONCRETE PAVEMENT	DR	DRIVE	LDAP	LAND DRAINAGE & ALTERATION PERMIT	REINF	REINFORCE(D)(ING)(MENT)
AD	AREA DRAIN	DWG	DRAWING	LF	LINEAL FEET	REQ'D	REQUIRED
ADA	AMERICANS WITH DISABILITIES ACT	DWY	DRIVEWAY	LP	LOW POINT	RESTR	RESTRAINED
ADJ	ADJUST	EA	EACH	LPR	LOW PRESSURE	ROW	RIGHT-OF-WAY
AL	ALUMINUM	EC	END CURVE	LT	LEFT	RRFB	RECTANGULAR RAPID FLASHING BEACON
APPROX	APPROXIMATELY	EDOP	EDGE OF PAVEMENT	MATL(S)	MATERIALS	RT	RIGHT
APPVD	APPROVED	EG	EXISTING GRADE	MAX	MAXIMUM	S/W	SIDEWALK
ARV	AIR RELEASE VALVE	EL	ELEVATION	MFR(S)	MANUFACTURER(S)	S	SLOPE
ASSY	ASSEMBLY	ELEC	ELECTRIC, ELECTRICAL	MH(S)	MANHOLE(S)	SCHED	SCHEDULE
ATB	ASPHALT TREATED BASE	EOP	END OF PROJECT	MHSD	MANHOLE STORM DRAIN	SD	STORM DRAIN
APPROX	APPROXIMATELY	EP	EDGE OF PAVEMENT	MHSS	MANHOLE SANITARY SEWER	SDMH	STORM DRAIN MANHOLE
APVD	APPROVED	EQ	EQUAL	MIN	MINIMUM	SERV	SERVICE
BC	BEGIN CURVE	EQUIP	EQUIPMENT	MISC	MISCELLANEOUS	SHT(S)	SHEET(S)
BLDG	BUILDING	ESMT	EASEMENT	MJ	MECHANICAL JOINT	SL	SLOPE
BM	BENCHMARK	EVC	END VERTICAL CURVE	MON	MONUMENT	SPECS	SPECIFICATIONS
BO	BLOWOFF	EX	EXISTING	MUTCD	MANUAL ON UNIFORM TRAFFIC CONTROL DEVICES	SQ	SQUARE
BOP	BEGINNING OF PROJECT	EXCAV	EXCAVATION	NO	NUMBER	SQFT	SQUARE FOOT, SQUARE FT
BTM	BOTTOM	FAB	FABRICATE	NTS	NOT TO SCALE	SS	SANITARY SEWER
BVC	BEGIN VERTICAL CURVE	FD	FLOOR DRAIN	OC	ON CENTER	SST	STAINLESS STEEL
C/G	CURB & GUTTER	FH	FIRE HYDRANT	OD	OUTSIDE DIAMETER	ST	STREET
CB	CATCH BASIN	FI	FIELD INLET	ODOT	OREGON DEPARTMENT OF TRANSPORTATION	STA	STATION
CCP	CONCRETE CULVERT PIPE	FIN GR	FINISHED GRADE	OVHD	OVERHEAD UTILITY	STD	STANDARD
CFFL	CURB FACE FLOW LINE	FL	FLOW LINE	P	POWER	STL	STEEL
CI	CURB INLET	FLG	FLOW LINE OF GUTTER	P/L	PROPERTY LINE	SUB	SPRINGFIELD UTILITY BOARD
CIP	CAST IN PLACE	FM	FORCE MAIN	PC	POINT OF CURVATURE	SW	SIDEWALK
CL	CENTER LINE	FT	FOOT, FEET	PCCP	PORTLAND CEMENT CONCRETE	TB	THRUST BLOCK
CLS	CLASS	FTG	FITTING	PERM	PERMANENT	TCP	TRAFFIC CONTROL PLAN
CO	CLEANOUT	G	GAS	PI	POINT OF INTERSECTION	TEL	TELEPHONE
CONC	CONCRETE	GB	GRADE BREAK	POLY	POLYETHYLENE	TEMP	TEMPORARY
CONST	CONSTRUCT, CONSTRUCTION	GALV	GALVANIZED	PRC	POINT OF REVERSE CURVATURE	TFC	TOP FACE OF CURB
CONT	CONTINUOUS	GR	GRADE	PRESS	PRESSURE	THK	THICK
COP	COPPER	GRVL	GRAVEL	PROP	PROPOSED	THRU	THROUGH
COR	CORNER	GV	GATE VALVE	PS	PUMP STATION	TV	TELEVISION
COS	CITY OF SPRINGFIELD	HMAC	HOT MIX ASPHALT CONCRETE	PT	POINT OF TANGENCY	TYP	TYPICAL
CPLG	COUPLING	HORIZ	HORIZONTAL	PUGD	UNDERGROUND POWER	VERT	VERTICAL(LY)
CR	CRUSHED ROCK	HP	HIGH POINT	PV	PLUG VALVE	W	WATER
CTB	CONCRETE TREATED BASE	HPR	HIGH PRESSURE	PVC	POLYVINYL CHLORIDE	WM	WATER METER
CV	CHECK VALVE	HWY	HIGHWAY	PVI	POINT OF VERTICAL INTERSECTION	WWMH	WASTEWATER MANHOLE
CY	CUBIC YARD	ID	INSIDE DIAMETER	PVMT	PAVEMENT	VC	VERTICAL CURVE
D	DRAIN	IE	INVERT ELEVATION	R	RATE		
DET	DETAIL	IN	INCH, INCHES	RAD	RADIUS		

SECTION, MATCHLINE, AND DETAIL DESIGNATIONS

SECTION DESIGNATIONS

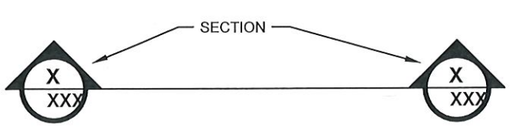

DETAIL DESIGNATIONS

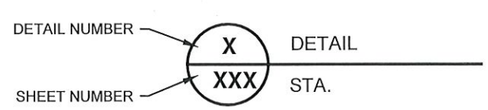

MATCHLINE DESIGNATIONS

MATCH LINE	SEE SHEET
STA XX+XX	XXX

LEGEND

GAS LINE (DIA SHOWN) — 4"G

STORMWATER DRAINAGE — SD

RIGHT OF WAY (ROW) LINE — ROW

WATER LINE (DIA SHOWN) — 16"W

FIRE HYDRANT

SIGN

TREE/BUSH/SHRUB

TRUNCATED DOME

WATER VALVE

WATER METER

No.	Revision/Issue	Date

811

Know what's **below.**
Call before you dig.

UTILITY LOCATIONS ARE APPROXIMATE. THE CONTRACTOR SHALL BE RESPONSIBLE FOR DETERMINING UTILITY LOCATIONS PRIOR TO BEGINNING OF CONSTRUCTION. THESE PLANS MAY NOT SHOW ALL UTILITIES OR THE CORRECT LOCATIONS.

Project P21172
ASTER STREET ADA RAMPS

City of Springfield
PUBLIC WORKS / ENGINEERING
225 FIFTH STREET, SPRINGFIELD, OR 97477
PHONE (541) 726-3753 FAX (541) 726-3689
INTERNET www.springfield-or.gov
SPRINGFIELD OREGON

REGISTERED PROFESSIONAL ENGINEER
54699PE
OREGON
JULY 15, 2003
JEFFREY ALAN PASCHALL

EXP DATE: 12-31-2022

ABBREVIATIONS, LEGEND

NO SCALE

DRAWN BY: T. GREEN
DESIGNED BY: K. KRUEGER
CHECKED BY: J. PASCHALL

SHEET A02 OF 14

October 8, 2021

C:\Users\tgreen\City Of Springfield, OR\DPW-CMD-Engineering - Capital Projects\Projects Folders\STREETS\P21172 Aster St ADA Ramps\02 - Design\Eng Tech Working Folder\P21172 A Sheets.dwg

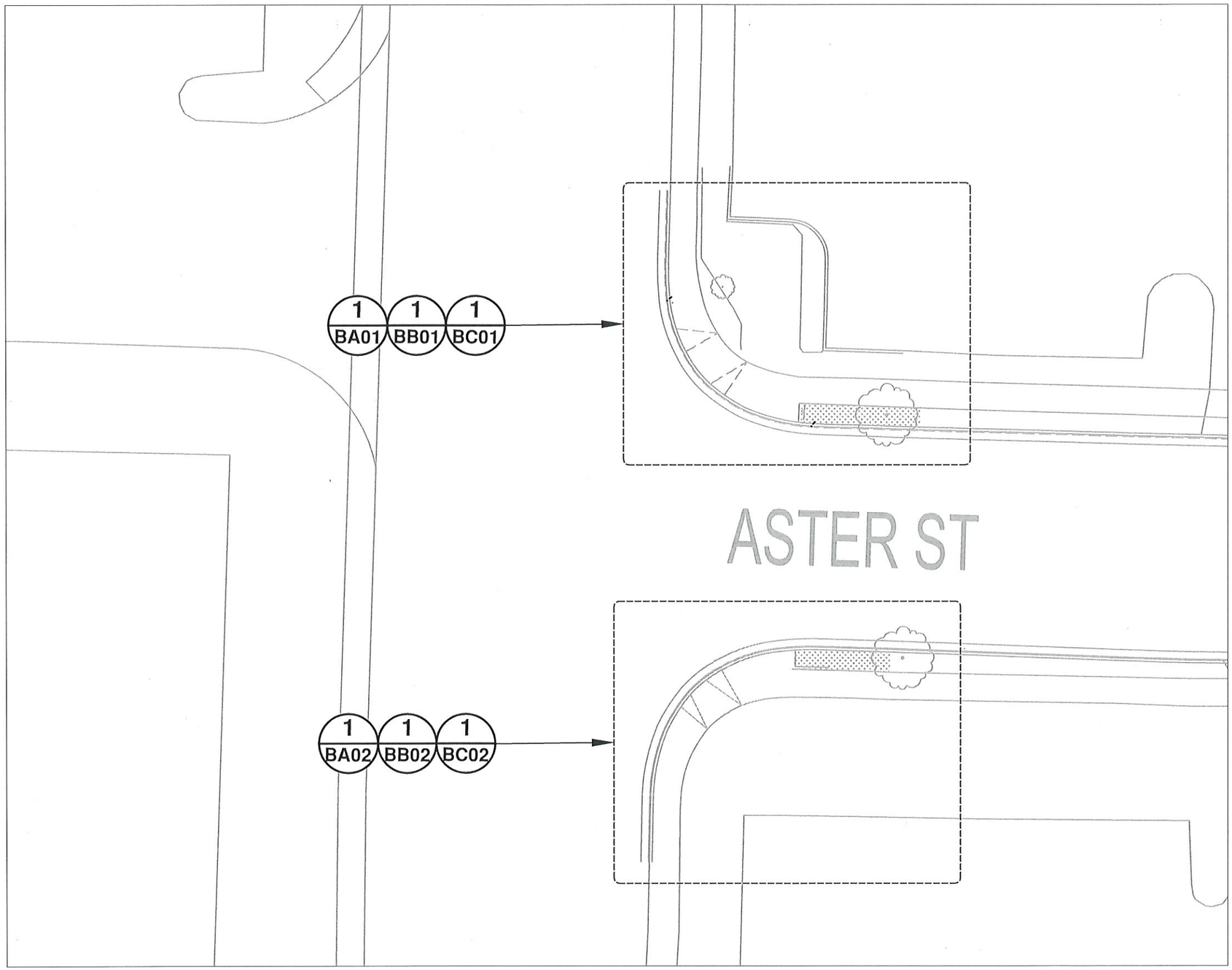

No.	Revision/Issue	Date

Know what's **below.**
Call before you dig.

UTILITY LOCATIONS ARE APPROXIMATE. THE CONTRACTOR SHALL BE RESPONSIBLE FOR DETERMINING UTILITY LOCATIONS PRIOR TO BEGINNING OF CONSTRUCTION. THESE PLANS MAY NOT SHOW ALL UTILITIES OR THE CORRECT LOCATIONS.

Project P21172
ASTER STREET ADA RAMPS

City of Springfield

PUBLIC WORKS / ENGINEERING
225 FIFTH STREET, SPRINGFIELD, OR 97477
PHONE (541) 726-3753 FAX (541) 726-3689
INTERNET www.springfield-or.gov

REGISTERED PROFESSIONAL ENGINEER
54699PE
OREGON
JULY 15, 2003
JEFFREY ALAN PASCHALL

EXP DATE: 12-31-2022

GENERAL LAYOUT

SCALE: 1" = 20'

DRAWN BY:	T. GREEN
DESIGNED BY:	K. KRUEGER
CHECKED BY:	J. PASCHALL

SHEET A03 OF 14

October 8, 2021

C:\Users\tgreen\City Of Springfield, OR\DPW-CMD-Engineering - Capital Projects\Projects Folders\STREETS\P21172 Aster St ADA Ramps\02 - Design\Eng Tech Working Folder\P21172 A Sheets.dwg

GENERAL CONSTRUCTION NOTES:

A. ALL MATERIALS AND WORKMANSHIP WITHIN THE PUBLIC RIGHT-OF-WAY OR PUBLIC EASEMENTS SHALL MEET STANDARD SPECIFICATIONS FOR CONSTRUCTION, AS SPECIFIED IN SECTION 'A' OF THE SPECIAL PROVISIONS IN ADDITION TO ALL OTHER SPECIFICATIONS REFERENCED OR INCLUDED, AND IN ADDITION TO THESE PLANS.

B. OREGON LAW REQUIRES THE CONTRACTOR TO FOLLOW RULES ADOPTED BY THE OREGON UTILITY NOTIFICATION CENTER. THOSE RULES ARE SET FORTH IN OAR 952-001-0010 THROUGH OAR 952-001-0100. THE CONTRACTOR MAY OBTAIN COPIES OF THE RULES BY CALLING THE CENTER. NOTE: THE TELEPHONE NUMBER FOR THE OREGON UTILITY NOTIFICATION CENTER IS (800) 332-2344 OR 811.

C. LOCATION AND/OR DEPTH OF EXISTING UTILITIES SHOWN ON PLANS ARE APPROXIMATE. ALL UTILITIES MAY NOT APPEAR ON PLANS. IT IS THE CONTRACTOR'S RESPONSIBILITY TO CONTACT ALL UTILITY COMPANIES FOR UNDERGROUND LOCATION OF FACILITIES AT LEAST 48 HOURS PRIOR TO EXCAVATING OR "POTHOLING". THE "ONE-CALL" NUMBER (800) 332-2344 OR 811.

D. CONTRACTOR SHALL BE RESPONSIBLE FOR COORDINATION WITH UTILITY COMPANIES ON THE TIMING OF INSTALLATION OF THEIR FACILITIES.

E. ALL SANITARY AND STORM SEWER CONNECTIONS TO EXISTING CITY OWNED FACILITIES (PIPE, CATCH BASINS, MANHOLES, ETC.) SHALL BE INSPECTED BY THE CONTRACTOR AND THE CITY'S DEVELOPMENT AND PUBLIC WORKS OPERATIONS DEPARTMENT PRIOR TO HOOK UP. CONTACT OPERATIONS AT (541-726-3761) OR CITY CONSTRUCTION INSPECTOR NO LESS THAN 48 HOURS PRIOR TO DESIRED INSPECTION TIME.

F. WHERE CONNECTING TO AN EXISTING PIPE. THE CONTRACTOR SHALL EXPOSE THE END OF THE EXISTING PIPE AND ALLOW THE ENGINEER TO VERIFY EXACT LOCATION AND ELEVATION, CONDITION, AND POSITIVE FLOW BEFORE LAYING ANY NEW PIPE ON THAT SYSTEM.

G. THE SEWER GRADE SHALL BE PER THE PLANS SPECIFICATIONS AND WITH THE MINIMUM COVER AS SHOWN ON THE PLANS

H. THE CONTRACTOR SHALL INTERNALLY TELEVISION INSPECT THE SEWER AFTER ALL BACKFILL AND BEFORE THE FINAL LIFT OF ASPHALT PAVING. THE CONTRACTOR SHALL SUPPLY THE CITY WITH A WRITTEN T.V. REPORT AND VIDEO TAPE OR DVD FOR CITY APPROVAL AT LEAST 2 WORKING DAYS BEFORE THE PRE-PAVING MEETING.

I. CONTRACTOR TO SCHEDULE A PRE-PAVING CONFERENCE 24 HOURS PRIOR TO PAVING. CONTACT THE CONSTRUCTION INSPECTOR.

J. ALL JOINTS BETWEEN EXISTING and NEW ASPHALT PAVING SHALL BE SEALED WITH POLYMERIZED ASPHALT AND SANDED TO PREVENT PICK UP.

K. COMPACTION REQUIREMENTS:

LAYER	RATE	TEST
SUBGRADE	95%	T99
CRUSHED ROCK	95%	T180
ASPHALT (LOCAL)	90%	RICE
ASPHALT (COLLECTOR/ARTERIAL)	92%	RICE

L. CONCRETE COMPRESSIVE STRENGTH REQUIREMENTS (PSI):

CONCRETE USE	FIELD	LABORATORY
SIDEWALK/ADA RAMPS	3000	3450
CURBS/GUTTERS	3500	4025
DRIVEWAYS	3500	4025
PAVEMENT	4000	4600

M. THIS PROJECT SHALL COMPLY WITH THE AMERICAN DISABILITIES ACT REQUIREMENTS SUCH AS INCORPORATION OF DESIGN CRITERIA FOR RAMPS, MAXIMUM PROFILE AND CROSS SECTION SLOPES FOR SIDEWALKS, UPGRADING EXISTING FACILITIES WHERE MAJOR CONSTRUCTION IS OCCURRING, AND BUILDING WARNING FOR OBJECTS IN SIDEWALK SUCH AS CURBING OR LANDSCAPING AROUND MAILBOXES.

N. CONTRACTOR IS RESPONSIBLE TO OBTAIN APPLICABLE PERMITS FROM OTHER AGENCIES WITH JURISDICTIONS SUCH AS LANE COUNTY, OREGON DEPARTMENT OF TRANSPORTATION, OREGON DIVISION OF STATE LANDS, THE ARMY CORPS OF ENGINEERS, OR THE DEPARTMENT OF ENVIRONMENTAL QUALITY.

O. ALL IMPROVEMENTS THAT WILL BE PRIVATELY OWNED AND MAINTAINED WILL BE BOUND BY THE CURRENT REQUIREMENTS OF THE STATE OF OREGON STRUCTURAL SPECIALTY CODE, PLUMBING SPECIALTY CODE, AND/OR CITY OF SPRINGFIELD BUILDING DIVISION REQUIREMENTS. CONTRACTOR IS RESPONSIBLE TO OBTAIN APPLICABLE PERMITS FROM OTHER CITY DEPARTMENTS PRIOR TO DOING PRIVATE WORK.

P. EROSION CONTROL MEASURES SHALL BE IN PLACE PRIOR TO THE START OF CONSTRUCTION. SEE EROSION CONTROL PLAN.

Q. STREET TREES: ONLY STREET TREES WITH A MINIMUM TRUNK CALIPER OF 2 IN. MEASURED 6 IN. ABOVE THE ROOT STEM SHALL BE SELECTED FOR PLANTING.

R. A PRE-CONSTRUCTION CONFERENCE IS REQUIRED BEFORE START OF CONSTRUCTION. ALL UTILITIES, CONTRACTORS and CITY REPRESENTATIVES SHALL HAVE RECEIVED THE FINAL APPROVED PLANS AT LEAST 5 WORKING DAYS PRIOR TO THE PRE CONSTRUCTION CONFERENCE.

S. THE ENGINEER AND/OR CITY HAVE THE RIGHT TO REQUIRE ADDITIONAL WORK NOT SHOWN HEREIN BUT NECESSARY FOR THE SUCCESSFUL COMPLETION OF THE PROJECT. STD.SPEC. 104.08.

T. REQUESTS BY THE CONTRACTOR FOR CHANGES SHALL BE APPROVED BY THE ENGINEER AND THE CITY IN WRITING PRIOR TO IMPLEMENTATION.

U. CONTRACTOR SHALL BE AWARE IF PAVING IS NOT SCHEDULED OR DOES NOT OCCUR PRIOR TO OCTOBER 15TH, WET WEATHER PROVISIONS INCLUDING ADDITIONAL ROCK SUBSTRUCTURE AND GEOTEXTILE FABRIC SHALL USED. REFER TO STANDARD SPECIFICATION SECTION 301.1.01 AND THE TYPICAL CROSS SECTIONS CONTAINED HEREIN FOR DETAILS.

V. THE CONTRACTOR SHALL VERIFY EACH EXISTING SANITARY AND STORM CONNECTION.

No.	Revision/Issue	Date

811
Know what's **below.**
Call before you dig.

UTILITY LOCATIONS ARE APPROXIMATE. THE CONTRACTOR SHALL BE RESPONSIBLE FOR DETERMINING UTILITY LOCATIONS PRIOR TO BEGINNING OF CONSTRUCTION. THESE PLANS MAY NOT SHOW ALL UTILITIES OR THE CORRECT LOCATIONS.

Project P21172
ASTER STREET ADA RAMPS

City of Springfield
SPRINGFIELD OREGON
PUBLIC WORKS / ENGINEERING
225 FIFTH STREET; SPRINGFIELD, OR 97477
PHONE (541) 726-3753 FAX (541) 726-3689
INTERNET www.springfield-or.gov

REGISTERED PROFESSIONAL ENGINEER
54699PE
OREGON
JULY 15, 2003
JEFFREY ALAN PASCHALL

EXP DATE: 12-31-2022

GEN. CONSTRUCTION NOTES

NO SCALE

DRAWN BY:	T. GREEN
DESIGNED BY:	K. KRUEGER
CHECKED BY:	J. PASCHALL

SHEET **A04** OF **14**

October 8, 2021

C:\Users\tgreen\City Of Springfield, OR\DPW-CMD-Engineering - Capital Projects\Projects Folders\STREETS\P21172 Aster St ADA Ramps\02 - Design\Eng Tech Working Folder\P21172 A Sheets.dwg

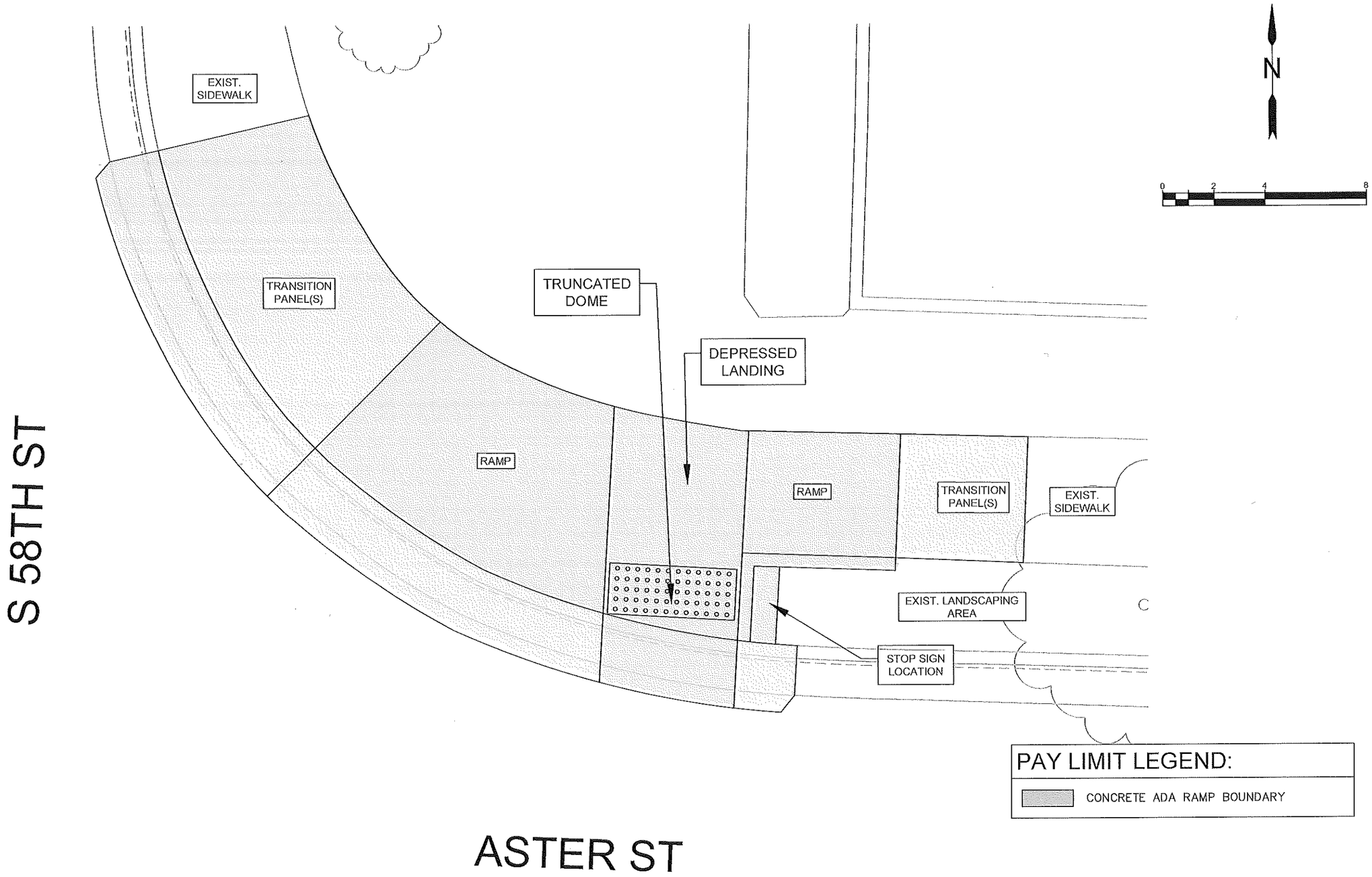

1 / BA01 S 58TH STREET AND ASTER STREET

NORTHEAST CORNER

No.	Revision/Issue	Date

811 Know what's below. Call before you dig.

UTILITY LOCATIONS ARE APPROXIMATE. THE CONTRACTOR SHALL BE RESPONSIBLE FOR DETERMINING UTILITY LOCATIONS PRIOR TO BEGINNING OF CONSTRUCTION. THESE PLANS MAY NOT SHOW ALL UTILITIES OR THE CORRECT LOCATIONS.

Project P21172
ASTER STREET ADA RAMPS

City of Springfield

PUBLIC WORKS / ENGINEERING
225 FIFTH STREET, SPRINGFIELD, OR 97477
PHONE: (541) 726-3753 FAX: (541) 726-3689
INTERNET www.springfield-or.gov

SPRINGFIELD OREGON

REGISTERED PROFESSIONAL ENGINEER
54699PE
OREGON
JULY 15, 2003
JEFFREY ALAN PASCHALL

EXP DATE: 12-31-2022

CURB RAMP PAY LIMITS

SCALE: 1" = 4'

DRAWN BY:	T. GREEN
DESIGNED BY:	K. KRUEGER
CHECKED BY:	J. PASCHALL

SHEET BA01 OF 14

August 4, 2022

C:\Users\tgreen\City Of Springfield, OR\DPW-CMD-Engineering - Capital Projects\Projects Folders\STREETS\P21172 Aster St ADA Ramps\02 - Design\Eng Tech Working Folder\P21172 BA Sheets.dwg

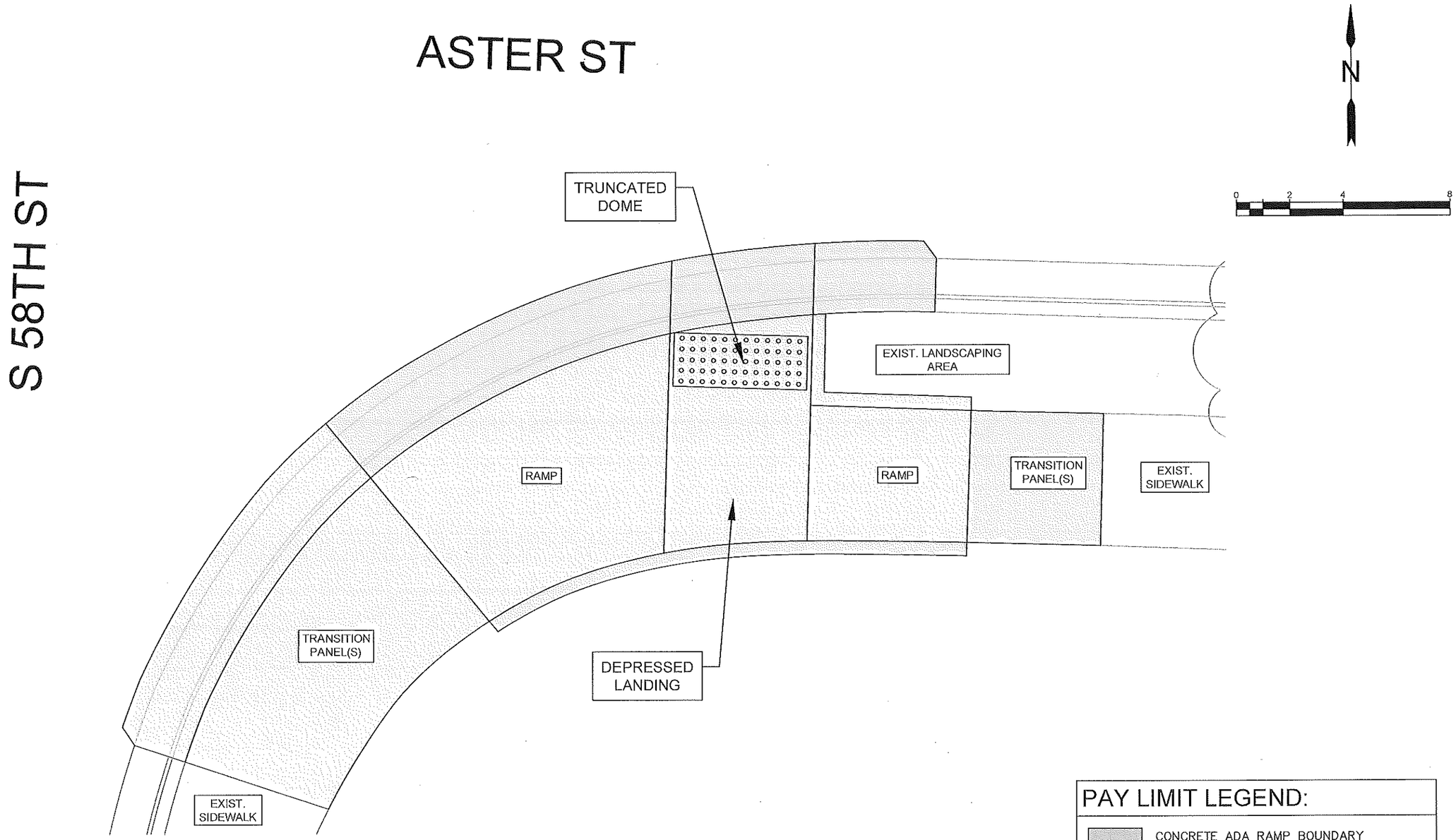

PAY LIMIT LEGEND:
CONCRETE ADA RAMP BOUNDARY

1 / BA02 S 58TH STREET AND ASTER STREET

SOUTHEAST CORNER

No.	Revision/Issue	Date

811 Know what's below. Call before you dig.

UTILITY LOCATIONS ARE APPROXIMATE. THE CONTRACTOR SHALL BE RESPONSIBLE FOR DETERMINING UTILITY LOCATIONS PRIOR TO BEGINNING OF CONSTRUCTION. THESE PLANS MAY NOT SHOW ALL UTILITIES OR THE CORRECT LOCATIONS.

Project P21172
ASTER STREET ADA RAMPS

City of Springfield

PUBLIC WORKS / ENGINEERING
225 FIFTH STREET, SPRINGFIELD, OR 97477
PHONE (541) 726-3753 FAX (541) 726-3689
INTERNET www.springfield-or.gov

SPRINGFIELD OREGON

REGISTERED PROFESSIONAL ENGINEER
54699PE
OREGON
JULY 15, 2003
JEFFREY ALAN PASCHALL

EXP DATE: 12-31-2022

CURB RAMP PAY LIMITS

SCALE: 1" = 4'	SHEET BA02 OF 14
DRAWN BY: T. GREEN	
DESIGNED BY: K. KRUEGER	
CHECKED BY: J. PASCHALL	

August 4, 2022

C:\Users\tgreen\City Of Springfield, OR\DPW-CMD-Engineering - Capital Projects\Projects Folders\STREETS\P21172 Aster St ADA Ramps\02 - Design\Eng Tech Working Folder\P21172 BA Sheets.dwg

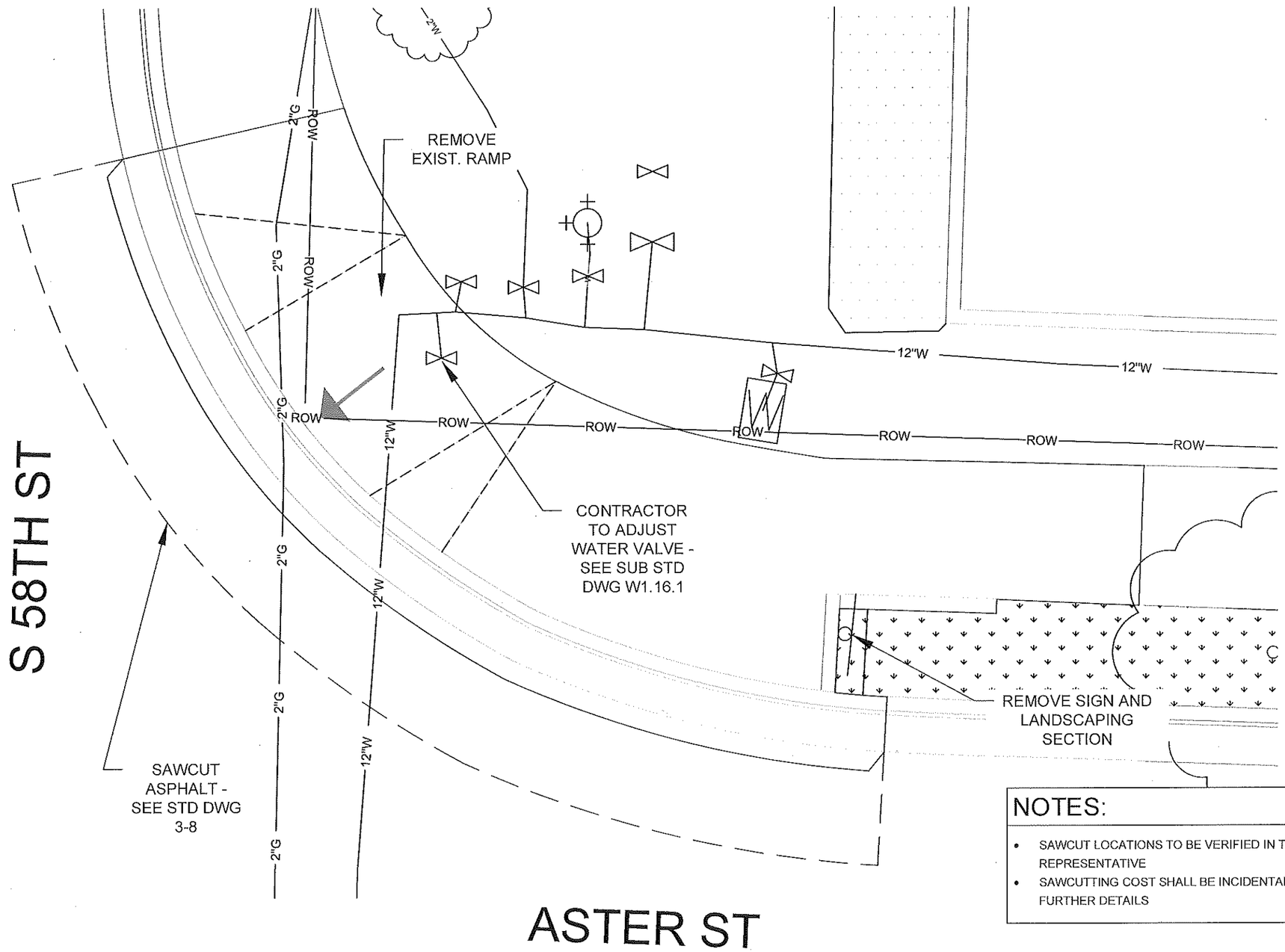

NOTES:

- SAWCUT LOCATIONS TO BE VERIFIED IN THE FIELD WITH ENGINEER OR REPRESENTATIVE
- SAWCUTTING COST SHALL BE INCIDENTAL; SEE SPECIAL PROVISIONS FOR FURTHER DETAILS

1 / BB01 S 58TH STREET AND ASTER STREET

NORTHEAST CORNER

No.	Revision/Issue	Date

811 Know what's below. Call before you dig.

UTILITY LOCATIONS ARE APPROXIMATE. THE CONTRACTOR SHALL BE RESPONSIBLE FOR DETERMINING UTILITY LOCATIONS PRIOR TO BEGINNING OF CONSTRUCTION. THESE PLANS MAY NOT SHOW ALL UTILITIES OR THE CORRECT LOCATIONS.

Project P21172
ASTER STREET ADA RAMPS

City of Springfield

PUBLIC WORKS / ENGINEERING
225 FIFTH STREET, SPRINGFIELD, OR 97477
PHONE (541) 726-3753 FAX (541) 726-3689
INTERNET www.springfield-or.gov

SPRINGFIELD OREGON

REGISTERED PROFESSIONAL ENGINEER
54699PE
OREGON
JULY 15, 2003
JEFFREY ALAN PASCHALL

EXP DATE: 12-31-2022

CURB RAMP EXCAVATION DETAILS

SCALE: 1" = 4'

DRAWN BY:	T. GREEN
DESIGNED BY:	K. KRUEGER
CHECKED BY:	J. PASCHALL

SHEET **BB01** OF **14**

August 4, 2022

C:\Users\tgreen\City Of Springfield, OR\DPW-CMD-Engineering - Capital Projects\Projects Folders\STREETS\P21172 Aster St ADA Ramps\02 - Design\Eng Tech Working Folder\P21172 BB Sheets.dwg

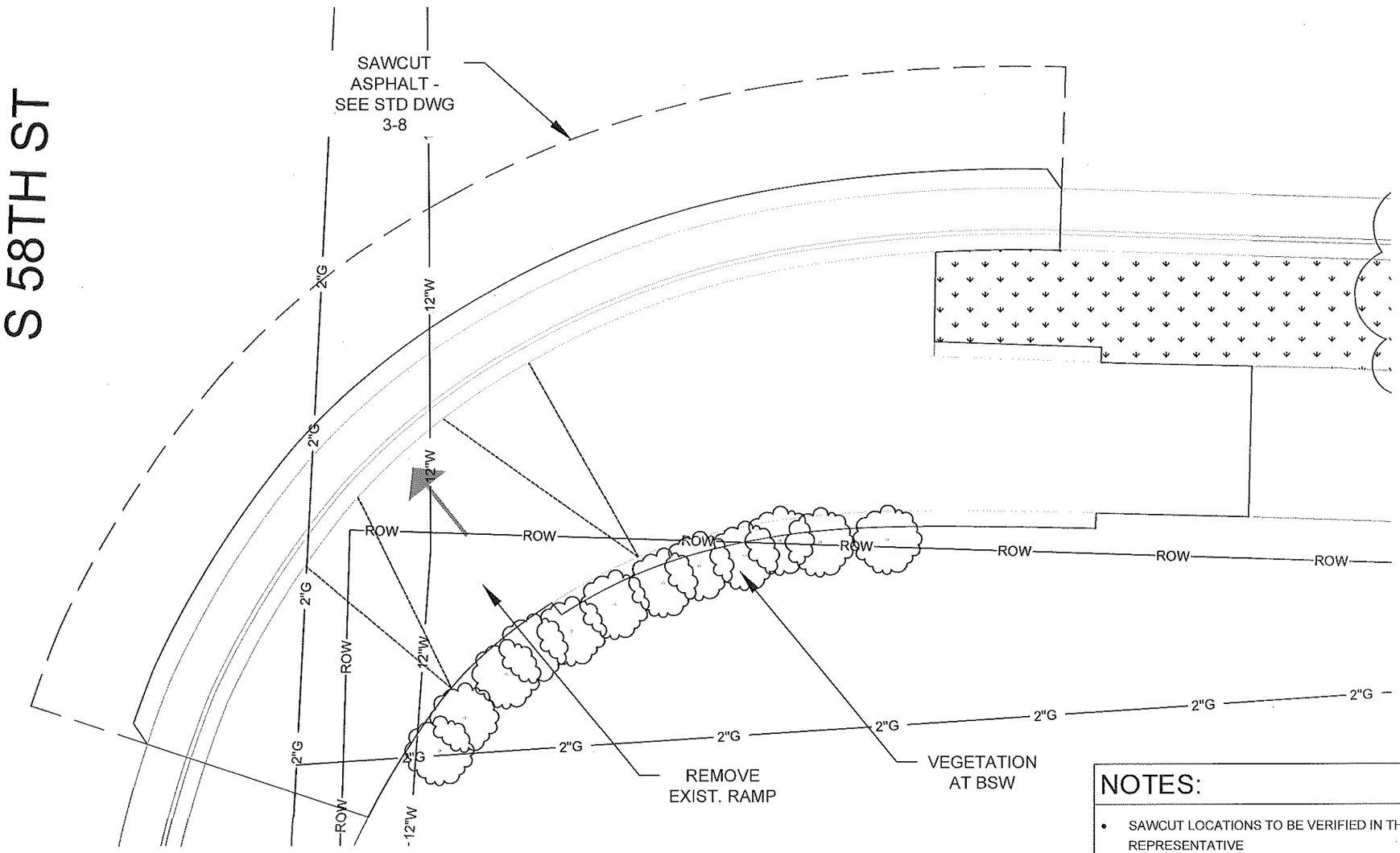

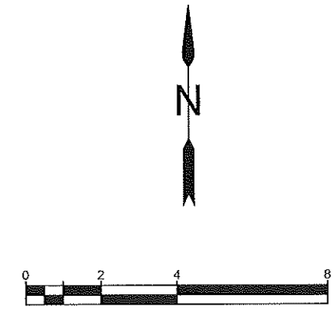

NOTES:

- SAWCUT LOCATIONS TO BE VERIFIED IN THE FIELD WITH ENGINEER OR REPRESENTATIVE
- SAWCUTTING COST SHALL BE INCIDENTAL; SEE SPECIAL PROVISIONS FOR FURTHER DETAILS

1 / BB02 — S 58TH STREET AND ASTER STREET

SOUTHEAST CORNER

No.	Revision/Issue	Date

811 Know what's below. Call before you dig.

UTILITY LOCATIONS ARE APPROXIMATE. THE CONTRACTOR SHALL BE RESPONSIBLE FOR DETERMINING UTILITY LOCATIONS PRIOR TO BEGINNING OF CONSTRUCTION. THESE PLANS MAY NOT SHOW ALL UTILITIES OR THE CORRECT LOCATIONS.

Project P21172
ASTER STREET ADA RAMPS

City of Springfield

PUBLIC WORKS / ENGINEERING
225 FIFTH STREET, SPRINGFIELD, OR 97477
PHONE (541) 726-3753 FAX (541) 726-3689
INTERNET www.springfield-or.gov

SPRINGFIELD OREGON

REGISTERED PROFESSIONAL ENGINEER
54699PE
OREGON
JULY 15, 2003
JEFFREY ALAN PASCHALL

EXP DATE: 12-31-2022

CURB RAMP EXCAVATION DETAILS

SCALE: 1" = 4'

DRAWN BY:	T. GREEN
DESIGNED BY:	K. KRUEGER
CHECKED BY:	J. PASCHALL

SHEET BB02 OF 14

August 4, 2022

C:\Users\tgreen\City Of Springfield, OR\DPW-CMD-Engineering - Capital Projects\Projects Folders\STREETS\P21172 Aster St ADA Ramps\02 - Design\Eng Tech Working Folder\P21172 BB Sheets.dwg

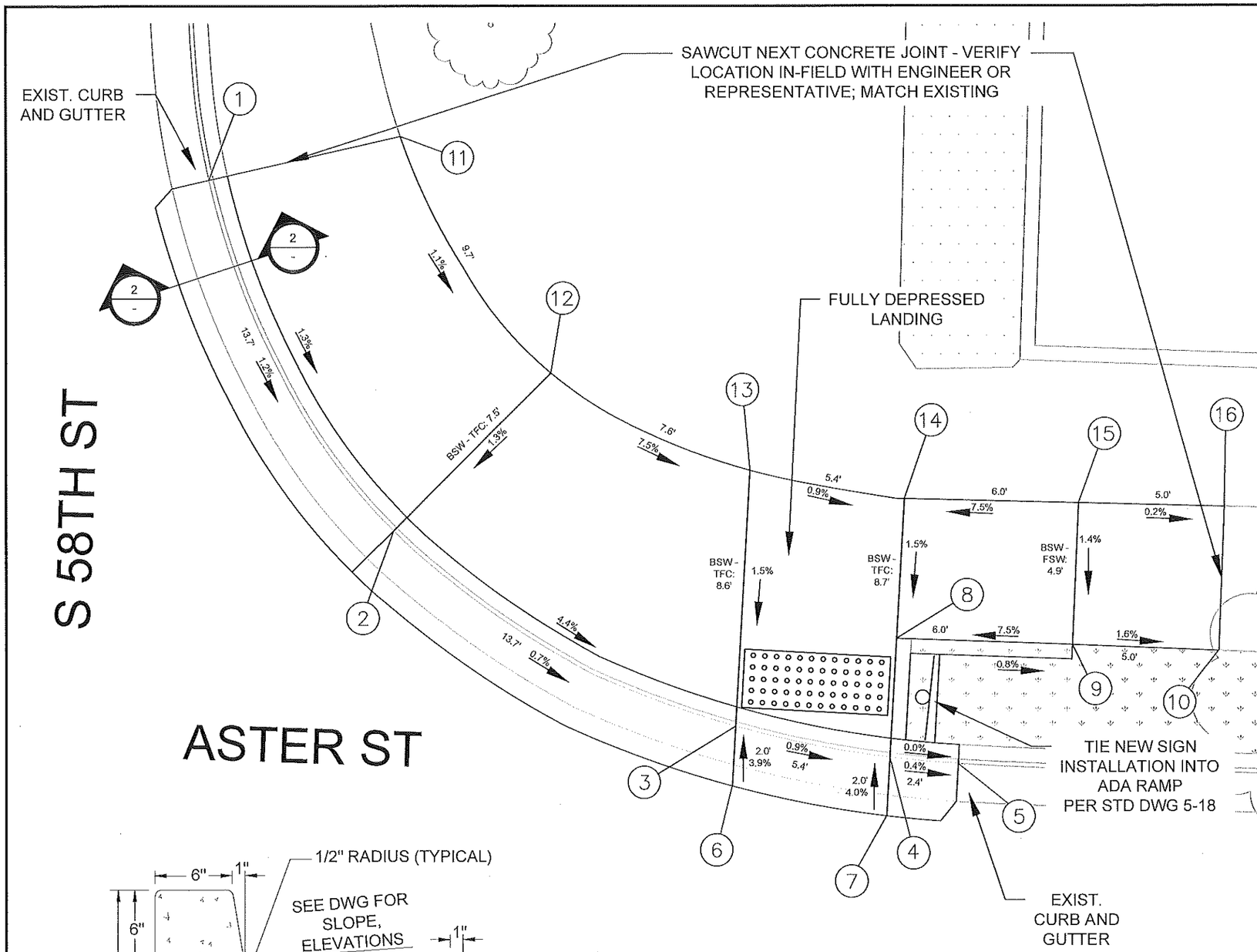

POINT TABLE		
POINT #	CFFL ELEV. (FT)	TFC ELEV. (FT)
1	510.21	510.72
2	510.04	510.54
3	509.94	509.94
4	509.89	510.39
5	509.88	510.39
POINT #	ELEV. (FT)	DESCRIPTION
6	510.02	GUTTER EDGE
7	509.97	GUTTER EDGE
POINT #	FSW BC ELEV. (FT)	FSW TC ELEV. (FT)
8	509.95	510.45
9	510.40	510.40
10	510.32	-
POINT #	BSW ELEV. (FT)	
11	510.75	
12	510.64	
13	510.07	
14	510.02	
15	510.47	
16	510.46	

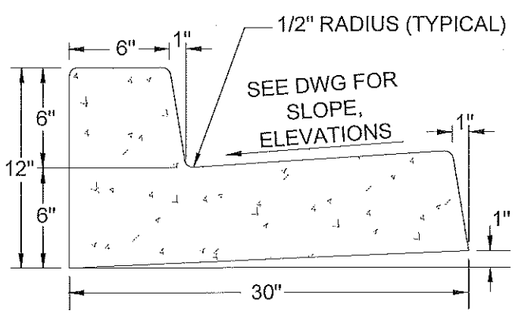

1 / BC01 S 58TH STREET AND ASTER STREET
NORTHEAST CORNER

2 / BC01 ADA CROSSING EXTENDED CURB AND GUTTER

No.	Revision/Issue	Date

811 Know what's below. Call before you dig.

UTILITY LOCATIONS ARE APPROXIMATE. THE CONTRACTOR SHALL BE RESPONSIBLE FOR DETERMINING UTILITY LOCATIONS PRIOR TO BEGINNING OF CONSTRUCTION. THESE PLANS MAY NOT SHOW ALL UTILITIES OR THE CORRECT LOCATIONS.

Project P21172
ASTER STREET ADA RAMPS

City of Springfield
SPRINGFIELD OREGON
PUBLIC WORKS / ENGINEERING
225 FIFTH STREET, SPRINGFIELD, OR 97477
PHONE (541) 726-3753 FAX (541) 726-3689
INTERNET www.springfield-or.gov

REGISTERED PROFESSIONAL ENGINEER
54699PE
OREGON
JULY 15, 2003
JEFFREY ALAN PASCHALL

EXP DATE: 12-31-2022

CURB RAMP DETAILS

SCALE: 1" = 4'

DRAWN BY: T. GREEN
DESIGNED BY: K. KRUEGER
CHECKED BY: J. PASCHALL

SHEET BC01 OF 14

August 4, 2022

C:\Users\tgreen\City Of Springfield, OR\DPW-CMD-Engineering - Capital Projects\Projects Folders\STREETS\P21172 Aster St ADA Ramps\02 - Design\Eng Tech Working Folder\P21172 BC Sheets.dwg

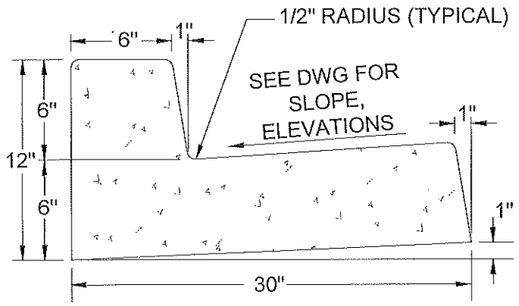

2 BC02 ADA CROSSING EXTENDED CURB AND GUTTER

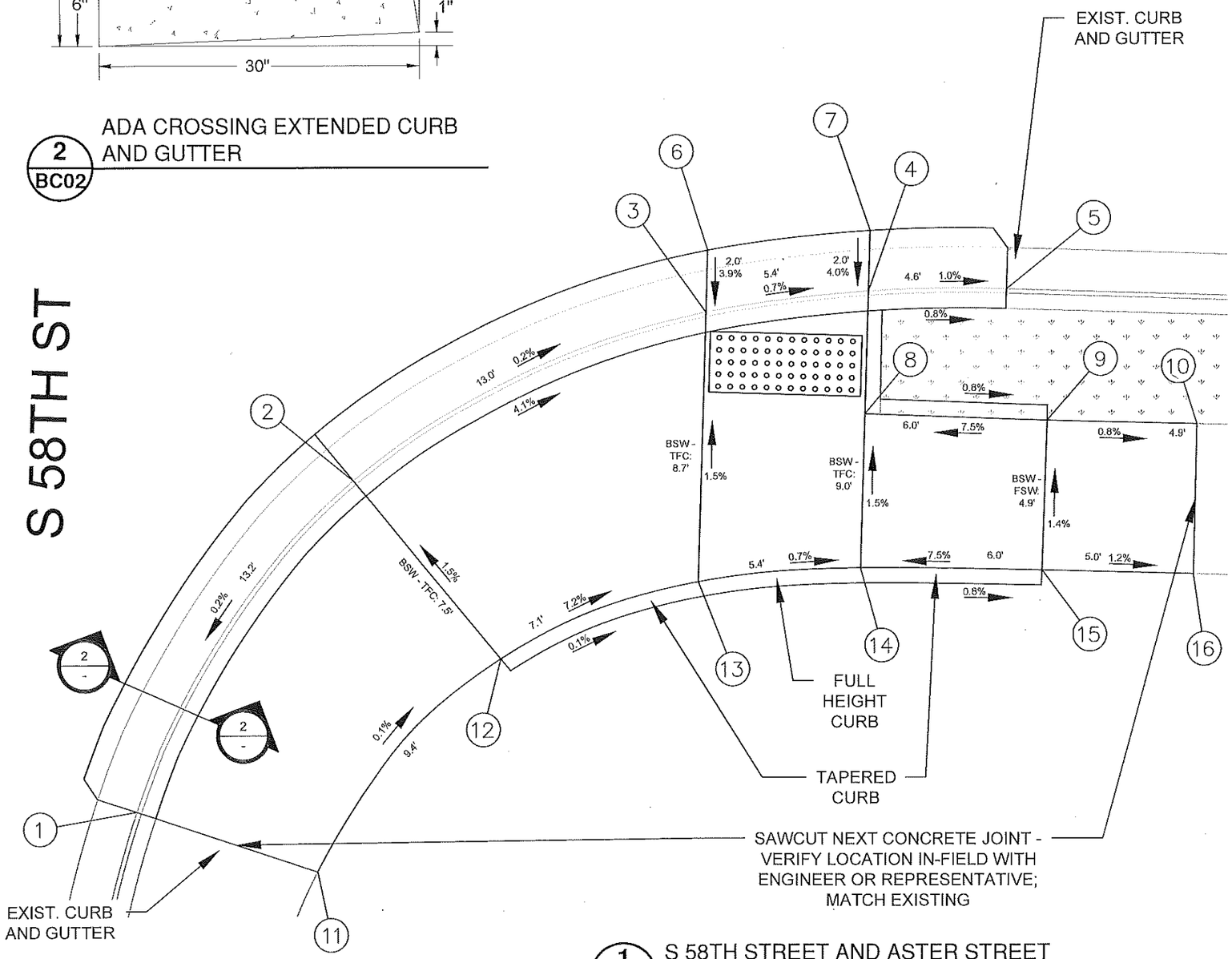

1 BC02 S 58TH STREET AND ASTER STREET
SOUTHEAST CORNER

POINT TABLE		
POINT #	CFFL ELEV. (FT)	TFC ELEV. (FT)
1	510.01	510.52
2	510.04	510.54
3	510.01	510.01
4	509.97	510.47
5	509.93	510.44
POINT #	ELEV. (FT)	DESCRIPTION
6	510.09	GUTTER EDGE
7	510.05	GUTTER EDGE
POINT #	FSW BC ELEV. (FT)	FSW TC ELEV. (FT)
8	510.03	510.53
9	510.48	510.48
10	510.44	-
POINT #	BSW BC ELEV. (FT)	BSW TC ELEV. (FT)
11	510.66	-
12	510.65	510.65
13	510.14	510.64
14	510.10	510.60
15	510.55	510.55
16	510.49	-

No.	Revision/Issue	Date

811 Know what's below. Call before you dig.

UTILITY LOCATIONS ARE APPROXIMATE. THE CONTRACTOR SHALL BE RESPONSIBLE FOR DETERMINING UTILITY LOCATIONS PRIOR TO BEGINNING OF CONSTRUCTION. THESE PLANS MAY NOT SHOW ALL UTILITIES OR THE CORRECT LOCATIONS.

Project P21172
ASTER STREET ADA RAMPS

City of Springfield
SPRINGFIELD OREGON

PUBLIC WORKS / ENGINEERING
225 FIFTH STREET, SPRINGFIELD, OR 97477
PHONE (541) 726-3753 FAX (541) 726-3689
INTERNET www.springfield-or.gov

REGISTERED PROFESSIONAL ENGINEER
54699PE
OREGON
JULY 15, 2003
JEFFREY ALAN PASCHALL

EXP DATE: 12-31-2022

CURB RAMP DETAILS

SCALE: 1" = 4'

DRAWN BY: T. GREEN
DESIGNED BY: K. KRUEGER
CHECKED BY: J. PASCHALL

SHEET BC02 OF 14

August 4, 2022

C:\Users\tgreen\City Of Springfield, OR\DPW-CMD-Engineering - Capital Projects\Projects Folders\STREETS\P21172 Aster St ADA Ramps\02 - Design\Eng Tech Working Folder\P21172 BC Sheets.dwg

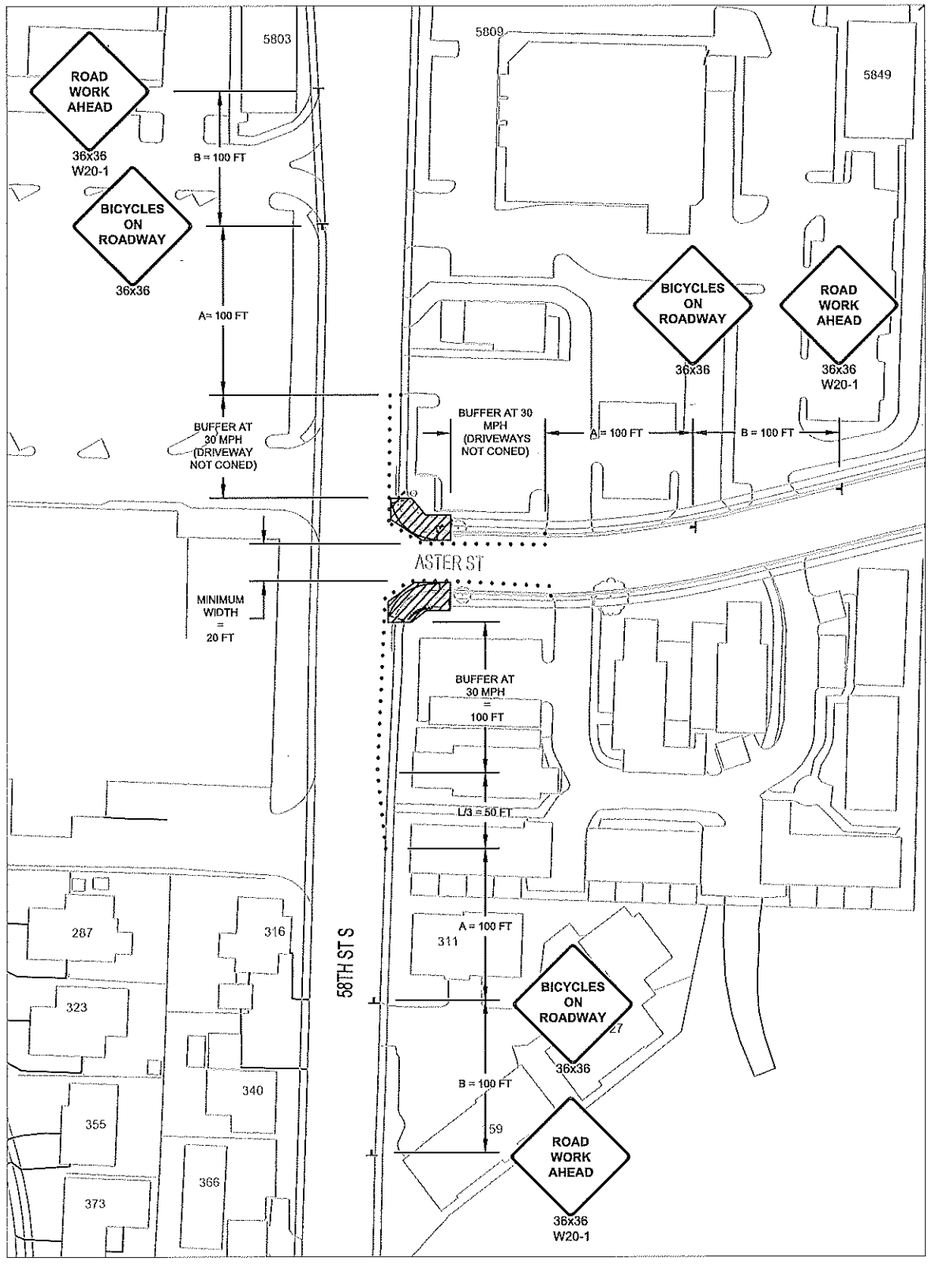

TAPER TYPES & FORMULAS	
TAPER	FORMULA
MERGING (LANE CLOSURE)	"L"
SHIFTING	"L"/2 OR 1/2"L"
SHOULDER CLOSURE	"L"/3 OR 1/3"L"
FLAGGING	50' - 100'
DOWNSTREAM (TERMINATION)	VARIES

TRAFFIC CONTROL DEVICES (TCD) SPACING TABLE

SPEED (MPH)	SIGN SPACING (FT)			MAX. CHANNELIZING DEVICE SPACING (FT)
	A	B	C	
20 - 30	100	100	100	20
35 - 40	350	350	350	20
45 - 55	500	500	500	40
60 - 70	700	700	700	40
FREEWAY	100	1500	2640	40

MINIMUM LENGTHS TABLE

SPEED (MPH)	"L" VALUE FOR TAPERS (FT)				Buffer (FT)
	W=Lane or Shoulder Width being closed or shifted				
	W ≤ 10	W = 12	W = 14	W = 16	
25	105	125	145	165	75
30	150	180	210	240	100
35	205	245	285	325	125
40	265	320	375	430	150
45	450	540	630	720	180
50	500	600	700	800	210
55	550	660	770	880	250
60	600	720	840	960	285
65	650	780	910	1000	325
70	700	840	980	1000	365
FREEWAYS					
55	1000	1000	1000	1000	250
60	1000	1000	1000	1000	285
65	1000	1000	1000	1000	325
70	1000	1000	1000	1000	365

No.	Revision/Issue	Date

811
Know what's **below.**
Call before you dig.

UTILITY LOCATIONS ARE APPROXIMATE. THE CONTRACTOR SHALL BE RESPONSIBLE FOR DETERMINING UTILITY LOCATIONS PRIOR TO BEGINNING OF CONSTRUCTION. THESE PLANS MAY NOT SHOW ALL UTILITIES OR THE CORRECT LOCATIONS.

Project P21172
ASTER STREET ADA RAMPS

City of Springfield
PUBLIC WORKS / ENGINEERING
225 FIFTH STREET, SPRINGFIELD, OR 97477
PHONE (541) 726-3753 FAX (541) 726-3689
INTERNET www.springfield-or.gov
SPRINGFIELD OREGON

REGISTERED PROFESSIONAL ENGINEER
19697PE
OREGON
MAY 5, 1998
BRIAN F. BARNETT

EXP DATE: 12-31-2023

TEMPORARY TRAFFIC CONTROL DETAILS

NO SCALE

DRAWN BY:	T. GREEN
DESIGNED BY:	K. KRUEGER
CHECKED BY:	J. PASCHALL

SHEET **E01** OF **14**

January 7, 2022

C:\Users\tgreen\City Of Springfield, OR\DPW-CMD-Engineering - Capital Projects\Projects Folders\STREETS\P21172 Aster St ADA Ramps\02 - Design\Eng Tech Working Folder\P21172 E Sheets.dwg

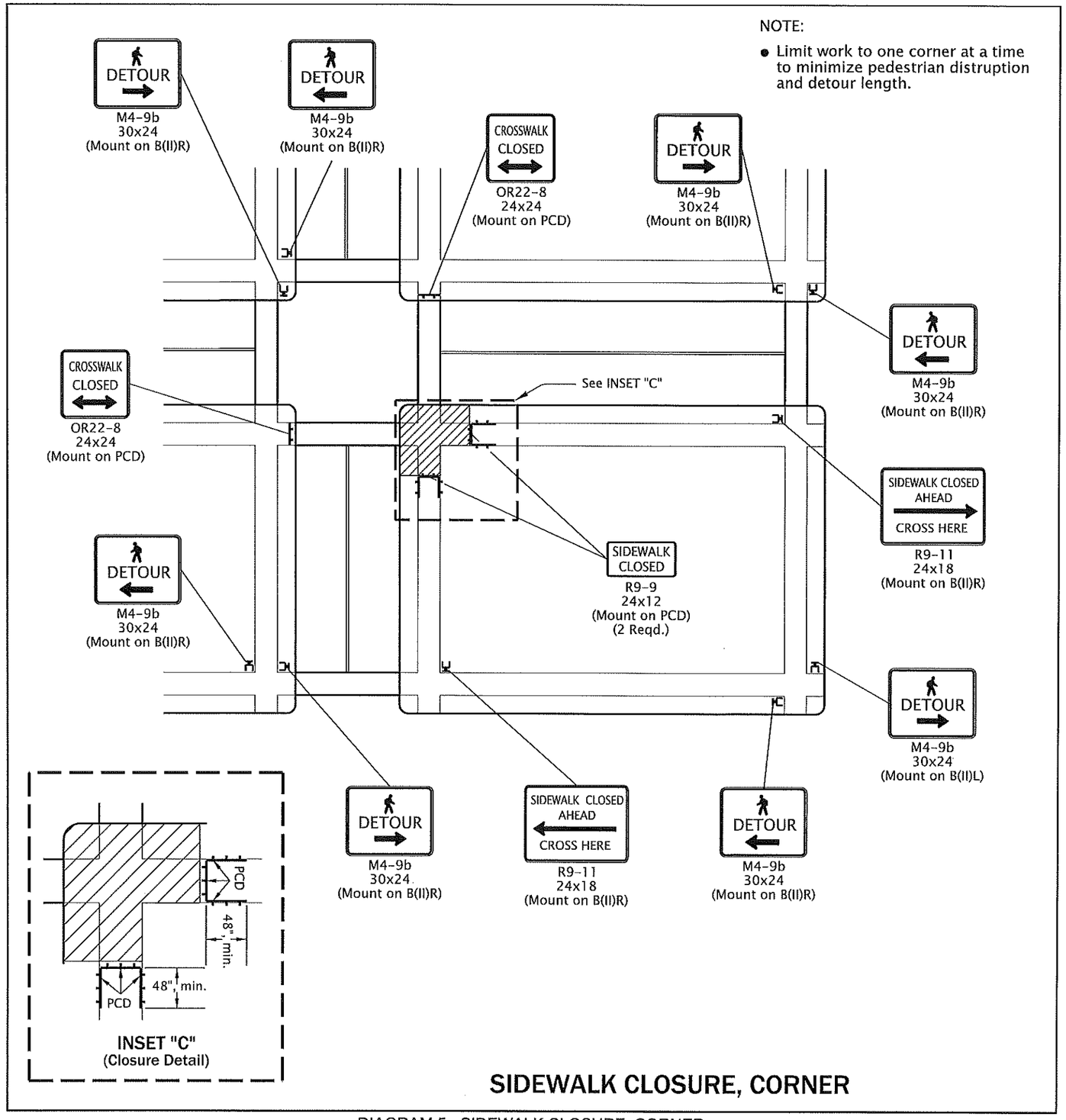

DIAGRAM 5 - SIDEWALK CLOSURE, CORNER
(REF, SEE ODOT STD DWG TM844)

No.	Revision/Issue	Date

811
Know what's **below.**
Call before you dig.

UTILITY LOCATIONS ARE APPROXIMATE. THE CONTRACTOR SHALL BE RESPONSIBLE FOR DETERMINING UTILITY LOCATIONS PRIOR TO BEGINNING OF CONSTRUCTION. THESE PLANS MAY NOT SHOW ALL UTILITIES OR THE CORRECT LOCATIONS.

Project P21172
ASTER STREET ADA RAMPS

City of Springfield

PUBLIC WORKS / ENGINEERING
225 FIFTH STREET, SPRINGFIELD, OR 97477
PHONE (541) 726-3753 FAX (541) 726-3689
INTERNET www.springfield-or.gov

SPRINGFIELD OREGON

REGISTERED PROFESSIONAL ENGINEER
19697PE
OREGON
MAY 5, 1998
BRIAN F. BARNETT

EXP DATE: 12-31-2023

TEMPORARY TRAFFIC CONTROL DETAILS

NO SCALE

DRAWN BY:	T. GREEN
DESIGNED BY:	K. KRUEGER
CHECKED BY:	J. PASCHALL

SHEET **E02** OF **14**

January 7, 2022

C:\Users\tgreen\City Of Springfield, OR\DPW-CMD-Engineering - Capital Projects\Projects Folders\STREETS\P21172 Aster St ADA Ramps\02 - Design\Eng Tech Working Folder\P21172 E Sheets.dwg

NOTES:

1. PLACE INLET/CATCH BASIN PROTECTION AT EXISTING FIXTURES (SEE DETAILS ON SHEET F02.)

GENERAL NOTES:

1. CONCRETE WASHOUTS ARE NOT PROVIDED ON THIS PROJECT
2. SAW CUTTING SLURRY IS TO BE VACUMED
3. ANY AREAS OF EXPOSED SOILS. INCLUDING ROADWAY EMBANKMENTS, THAT WILL NOT BE DISTURBED FOR TWO DAYS DURING THE WET SEASON (OCTOBER 1 TO APRIL 30) OR SEVEN DAYS DURING THE DRY SEASON (MAY 1 TO SEPTEMBER 30) SHALL BE IMMEDIATELY STABILIZED WITH AN APPROVED ESC METHOD (SEEDING & MULCHING WITH STRAW, BARK, COMPOST, OR PLASTIC COVERING, ETC.).

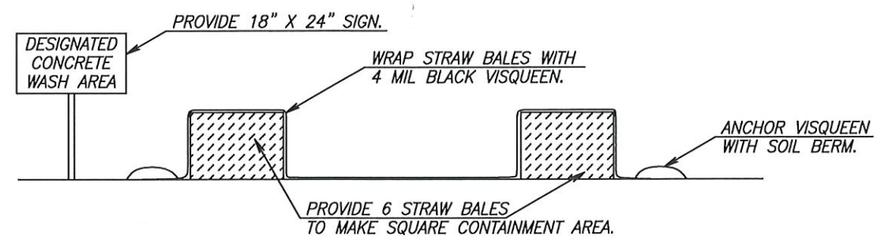

1 / F01 CONCRETE WASH AREA DETAIL

NOT TO SCALE

EROSION CONTROL STANDARD NOTES:

A. Approval of this Erosion and Sedimentation Control Plan (ESCP) does not constitute an approval of permanent road or drainage design (e.g., size and location of roads, pipes, restrictors, channels, retention facilities, utilities, etc.).

B. Approval of this ESCP does not relieve the permit holder and or the contractor from all other permitting requirements. Prior to beginning construction activities, all other necessary approvals shall be obtained.

C. An inspection of the erosion control measures by City LDAP staff is required prior to any ground disturbance on the site.

D. The erosion and sediment control measures shown on the plan are the minimum requirements for anticipated site conditions. During the construction period, these measures shall be upgraded as needed for unexpected storm events and to ensure that sediment and sediment-laden water does not leave the site.

E. The implementation of the ESCP and the construction, maintenance, replacement, and upgrading of the erosion and sediment control measures is the responsibility of the permit holder and or the contractor until all construction is completed and accepted by the City and vegetation/landscaping is established per the required warranty period.

F. In the event the ESC facilities identified on the ESCP are not functioning properly, the contractor is responsible for immediately implementing changes to the ESCP as directed by the ESCP engineer or his inspector. The engineer, his inspector or the City may stop all construction activity on site until the erosion problem is corrected and all ESC facilities are functioning properly. If the contractor does not immediately implement changes to the ESCP identified by the ESCP engineer or his inspector, the City may implement the necessary changes and require payment from the contractor prior to project acceptance by the City.

G. The boundaries of the clearing limits shown on this plan shall be clearly flagged in the field by the engineer prior to construction. During the construction period, no disturbance beyond the flagged clearing limits shall be permitted. The flagging shall be maintained by the permit holder and or the contractor for the duration of construction.

H. The erosion and sediment control measures on active sites shall be inspected and maintained daily and within the 24 hours after any storm event of greater than 0.5 inches of rain per 24 hour period. Measures shall be inspected by the permit holder and or the contractor after each rainfall and at least daily during prolonged rainfall. Any required repairs or adjustments shall be made immediately. The erosion and sediment control measures on inactive sites shall be inspected a minimum of once every two (2) weeks or within 48 hours following a storm event. Written records shall be kept of weekly reviews of the ESC facilities during the wet season (October 1 to April 30) and of monthly reviews during the dry season (May1 to September 30).

I. All erosion and sediment control measures shall be protected from damage at all times. Control measures shall remain in place until permanent or temporary re-vegetation has been stabilized. Any measure that is damaged or destroyed shall be repaired or replaced immediately.

J. Any areas of exposed soils, including roadway embankments, that will not be disturbed for two days during the wet season (October 1 to April 30) or seven days during the dry season (May 1 to September 30) shall be immediately stabilized with an approved ESC method (seeding & mulching with straw, bark, compost, or plastic covering, etc.).

K. A supply of materials necessary to meet compliance and implement the LDAP or other best management erosion practices under all weather conditions shall be maintained at all times on the construction site.

L. No hazardous substances, such as paints, thinners, fuels and other chemicals shall be released onto the site, adjacent properties, or into water features, the City's storm water system, or related natural resources.

M. Street sweeping shall be performed as needed or when directed by the City inspector to ensure public right-of-ways are kept clean and free of debris. Street flushing is prohibited.

N. When trucking saturated soils from the site, either water-tight trucks shall be used or loads shall be drained on site until dripping has been reduced to no more than one gallon per hour. Sediment laden water will not be allowed to enter the storm water system

O. Extracted ground water from excavated trenches shall be disposed of in a suitable manner without damage to adjacent property, public storm water system, water features, and related natural resources. Approval of a dewatering system does not guarantee that it will meet compliance or be acceptable for use in all situations. Modifications to the dewatering system will be required if compliance can not be met. At no time will sediment laden water be allowed to leave the construction site.

P. At no time shall more than one foot of sediment be allowed to accumulate within a catch basin. All catch basins and conveyance lines shall be cleaned prior to paving. The cleaning operation shall not flush sediment laden water into the downstream system.

Q. Any required stabilized construction entrances and roads shall be installed at the beginning of construction and maintained for the duration of the project. Additional measures, such as wash pads, may be required to ensure that all paved areas are kept clean for the duration of the project.

R. Any permanent flow control facility used as a temporary settling basin shall be modified with the necessary erosion control measures and shall provide adequate storage capacity.

S. Where straw mulch for temporary erosion control is required, it shall be applied at a minimum thickness of two to three inches.

T. In preparation of the wet season, all disturbed areas shall be reviewed to identify which ones can be seeded in preparation for the winter rains. A sketch map of those areas to be seeded and those areas to remain uncovered shall be submitted to the City by September 15. The City can require seeding of additional areas in order to protect surface waters, adjacent properties, or drainage facilities. Disturbed areas identified for seeding shall be seeded prior to the beginning of the wet season (October 1).

No.	Revision/Issue	Date

811 Know what's below. Call before you dig.

UTILITY LOCATIONS ARE APPROXIMATE. THE CONTRACTOR SHALL BE RESPONSIBLE FOR DETERMINING UTILITY LOCATIONS PRIOR TO BEGINNING OF CONSTRUCTION. THESE PLANS MAY NOT SHOW ALL UTILITIES OR THE CORRECT LOCATIONS.

Project P21172
ASTER STREET ADA RAMPS

City of Springfield
PUBLIC WORKS / ENGINEERING
225 FIFTH STREET / SPRINGFIELD, OR 97477
PHONE: (541) 726-3753 FAX: (541) 726-3689
INTERNET: www.springfield-or.gov

SPRINGFIELD OREGON

REGISTERED PROFESSIONAL ENGINEER 54699PE OREGON JULY 15, 2003 JEFFREY ALAN PASCHALL

EXP DATE: 12-31-2022

EROSION AND SEDIMENT CONTROL DETAILS

NO SCALE

DRAWN BY: T. GREEN
DESIGNED BY: K. KRUEGER
CHECKED BY: J. PASCHALL

SHEET F01 OF 14

October 8, 2021

C:\Users\tgreen\City Of Springfield, OR\DPW-CMD-Engineering - Capital Projects\Projects Folders\STREETS\P21172 Aster St ADA Ramps\02 - Design\Eng Tech Working Folder\P21172 F Sheets.dwg

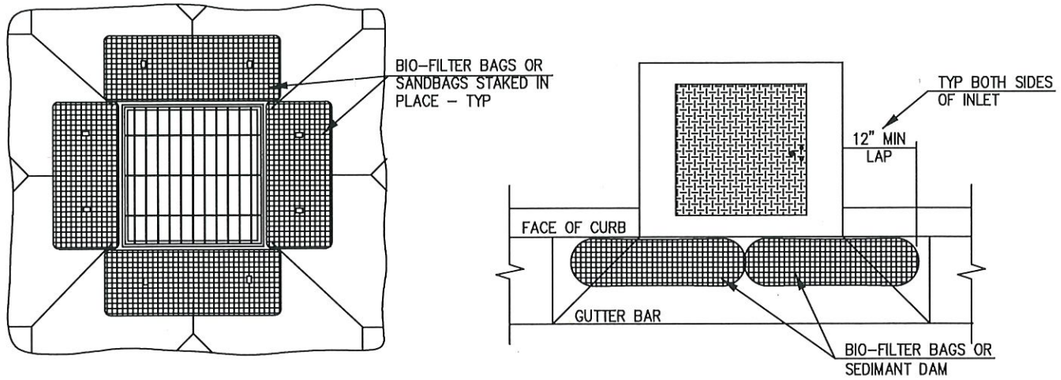

NOTES
1. PRIOR TO 1st PAVEMENT LIFT, REMOVE BIO-BAG/SANDBAG BARRIERS AND INSTALL BASIN INSERT BAG OR CURB INLET SEDIMENT DAM AT ALL INLET STRUCTURES.

1 / F02 DRAINAGE INLET STRUCTURE PROTECTION

NOT TO SCALE

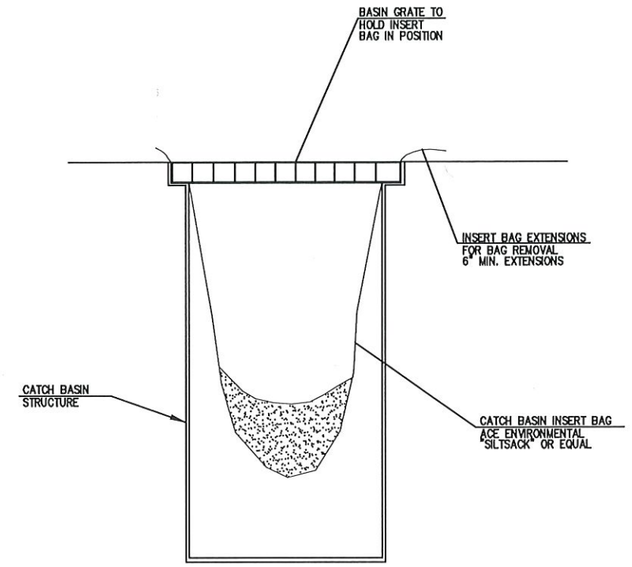

2 / F02 CATCH BASIN INSERT BAG

NOT TO SCALE

INLET PROTECTION

Notes:

1. Length:
   50' min. - for less than 1 acre exposed soil
   100' min. - for greater than 1 acre exposed soil
2. Width:
   20' - or width of extg. approach, whichever is greater.
3. Depth: 8" min

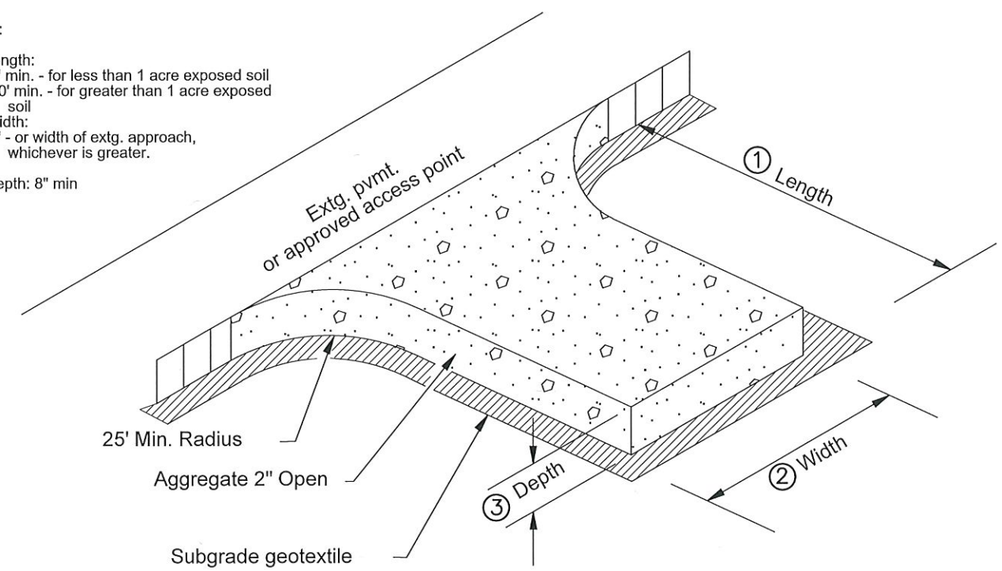

3 / F02 CONSTRUCTION ENTRANCE

NOT TO SCALE

No.	Revision/Issue	Date

811 Know what's **below.** **Call** before you dig.

UTILITY LOCATIONS ARE APPROXIMATE. THE CONTRACTOR SHALL BE RESPONSIBLE FOR DETERMINING UTILITY LOCATIONS PRIOR TO BEGINNING OF CONSTRUCTION. THESE PLANS MAY NOT SHOW ALL UTILITIES OR THE CORRECT LOCATIONS.

Project P21172
ASTER STREET ADA RAMPS

City of Springfield

SPRINGFIELD OREGON
PUBLIC WORKS / ENGINEERING
225 FIFTH STREET, SPRINGFIELD, OR 97477
PHONE (541) 726-3753 FAX (541) 726-3689
INTERNET www.springfield-or.gov

REGISTERED PROFESSIONAL ENGINEER
54699PE
OREGON
JULY 15, 2003
JEFFREY ALAN PASCHALL

EXP DATE: 12-31-2022

EROSION AND SEDIMENT CONTROL DETAILS

NO SCALE

DRAWN BY:	T. GREEN
DESIGNED BY:	K. KRUEGER
CHECKED BY:	J. PASCHALL

SHEET **F02** OF **14**

October 8, 2021

C:\Users\tgreen\City Of Springfield, OR\DPW-CMD-Engineering - Capital Projects\Projects Folders\STREETS\P21172 Aster St ADA Ramps\02 - Design\Eng Tech Working Folder\P21172 F Sheets.dwg

DO NOT USE THIS DETAIL FOR STANDARD CURB REMOVAL
REFER TO STANDARD DRAWING 3-7

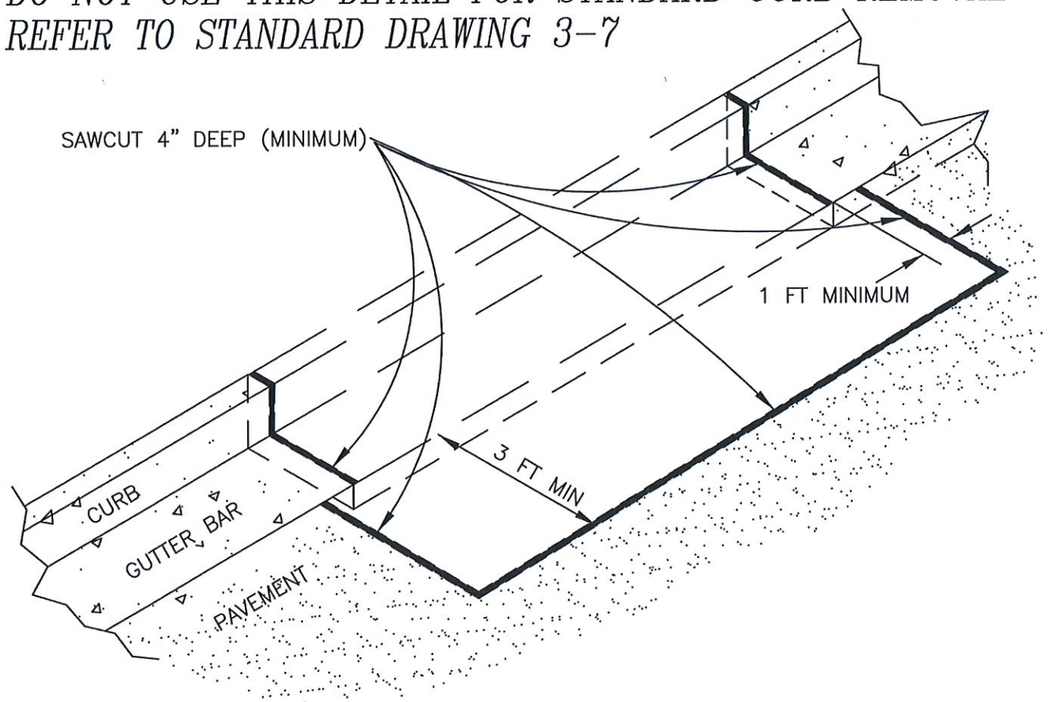

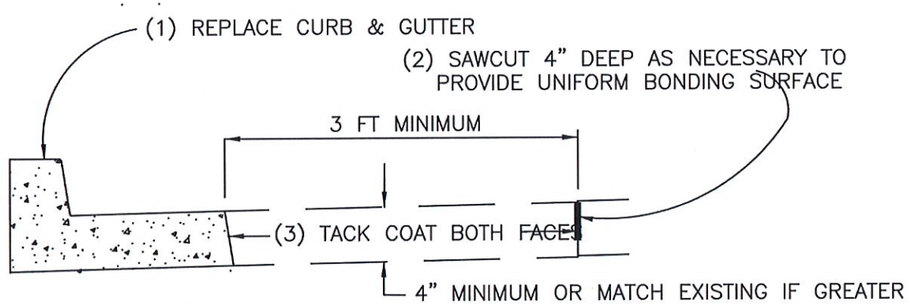

(4) PLACE HOT MIX ASPHALT AND USE MECHANICAL COMPACTION EQUIPMENT TO ACHIEVE REQUIRED DENSITY

(5) SEAL ALL JOINTS WITH POLYMERIZED ASPHALT AND SAND TO AVOID PICKUP

NOTES

* EXISTING GUTTER BAR SHALL NOT BE REMOVED WITHOUT PRIOR APPROVAL BY THE CITY
* CURB CUT WIDTH SHALL BE IN ACCORDANCE WITH PERMIT
* REFER TO SPRINGFIELD STANDARD SPECIFICATIONS FOR ROADWAY STRUCTURE COMPACTION REQUIREMENTS
* SIDEWALKS, ACCESS RAMPS, AND RESIDENTIAL DRIVEWAYS SHALL BE 3000 PSI FIELD STRENGTH (3450 PSI LAB STRENGTH) 6.0 SACK MIX CONCRETE
* CURBS & COMMERCIAL DRIVEWAYS SHALL BE 3500 PSI FIELD STRENGTH (4025 PSI LAB STRENGTH) 6.3 SACK MIX CONCRETE

NO	REVISION	DATE	BY	APPR.

CITY OF SPRINGFIELD
SPRINGFIELD
DEPT. OF PUBLIC WORKS

CURB & GUTTER
REMOVAL & REPLACEMENT

Al Peroutka City Engineer 2003

STANDARD DRAWING
3-8
2003

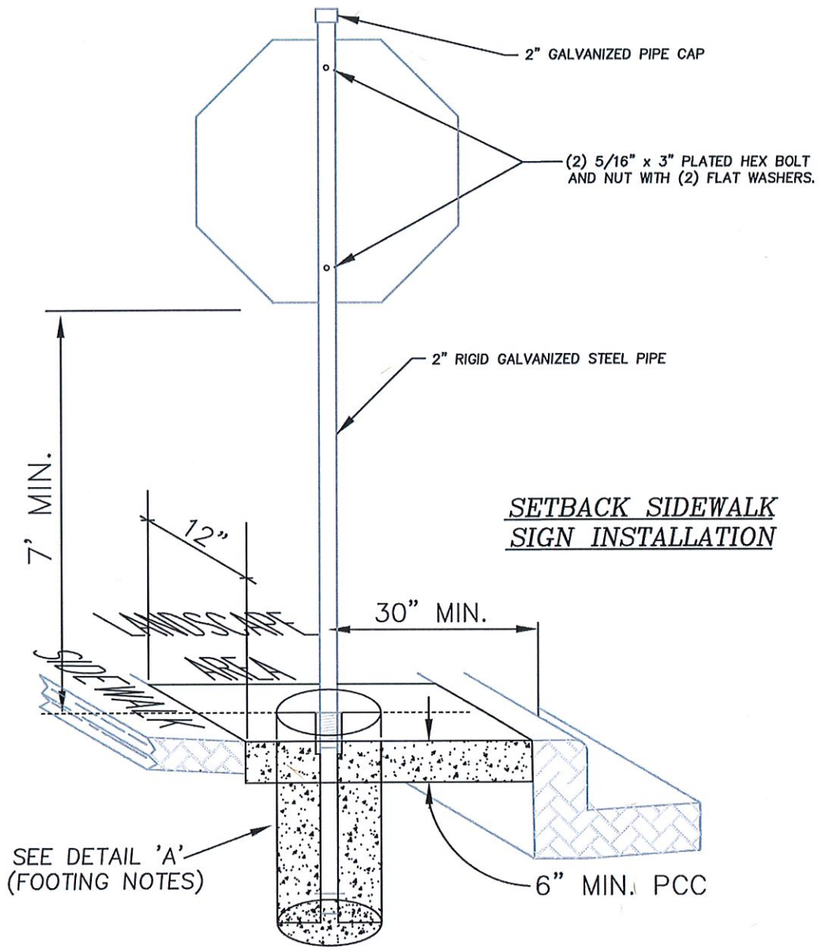

SETBACK SIDEWALK SIGN INSTALLATION

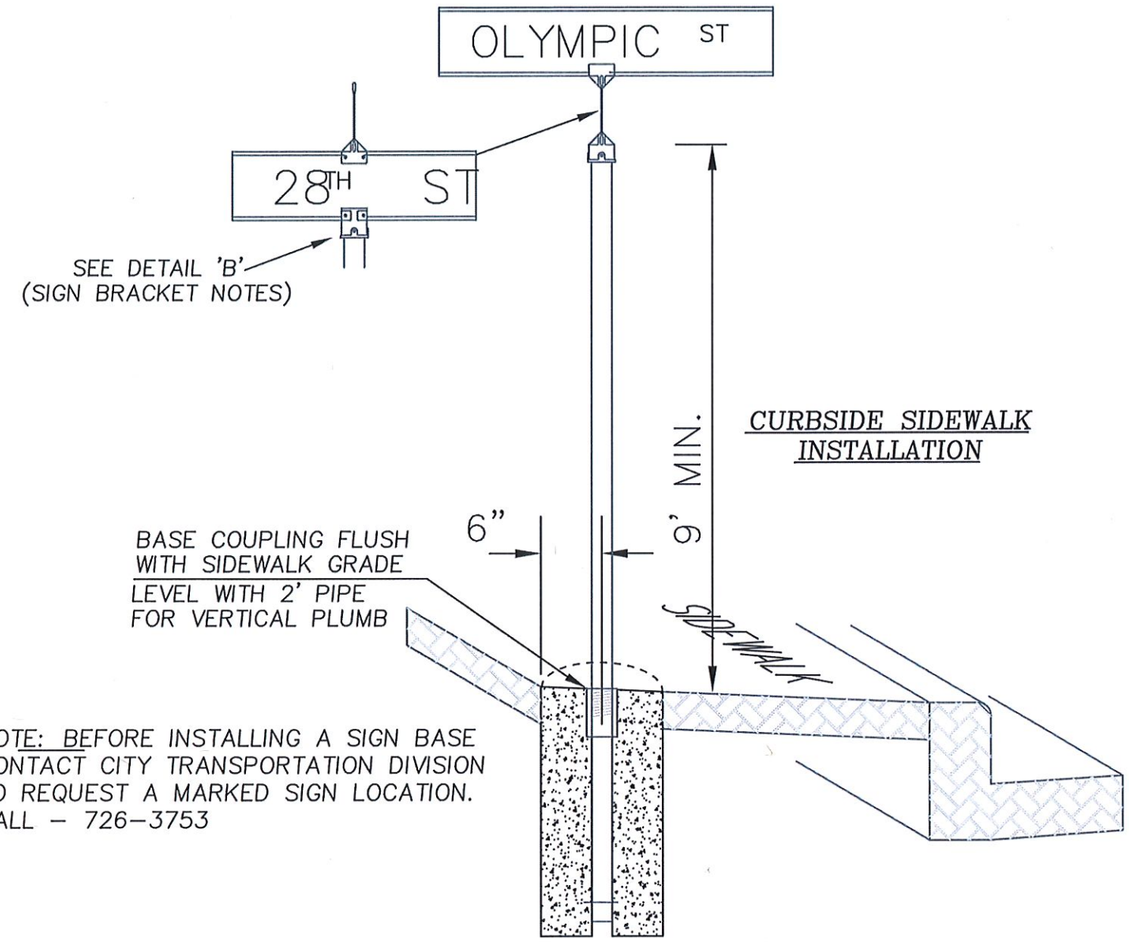

CURBSIDE SIDEWALK INSTALLATION

NOTE: BEFORE INSTALLING A SIGN BASE CONTACT CITY TRANSPORTATION DIVISION TO REQUEST A MARKED SIGN LOCATION. CALL – 726–3753

DETAIL 'A'

FOOTING INSTALLATION NOTES

1. INSTALL 2" RIGID GALVANIZED STEEL PIPE.
2. INSTALL 2" GALVANIZED THREADED STEEL PIPE COUPLING WITH TOP SET AT FINISHED GRADE.
3. INSTALL 2" RIGID GALVANIZED STEEL PIPE TACK WELDED TO COUPLING TO PREVENT TURNING.
4. INSTALL 1/4" X 5" STEEL PIN THROUGH STEEL PIPE
5. INSTALL SIGN BASE ASSEMBLY IN CLASS 3300 PORTLAND CONCRETE USING 2' MIN. GUIDE ROD TO INSURE SIGN POST WILL BE VERTICAL.

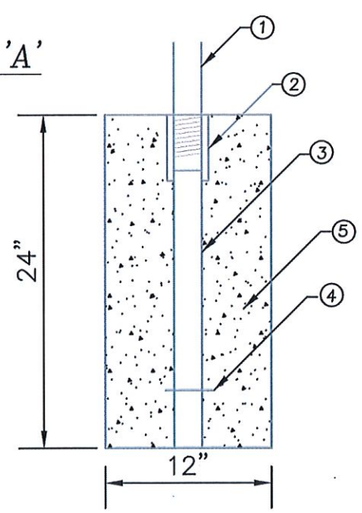

DETAIL 'B'

SIGN MOUNTING BRACKET NOTES

1. INSTALL STREET SIGN CAP MOUNT FOR STREET NAME SIGN.
2. INSTALL 90° TOP MOUNT FOR STREET NAME SIGN.
3. INSTALL EXTRUDED or FLAT ALUMINUM STREET NAME SIGN PER CITY SPECIFICATIONS.
4. MOUNTING BRACKETS FOR LOCAL SIGNS SHALL HAVE A GROVED CLAMP TO FIT EXTRUDED SIGNS. MOUNTING BRACKETS FOR COLLECTOR SIGNS SHALL HAVE A FLAT CLAMP TO FIT FLAT SIGNS

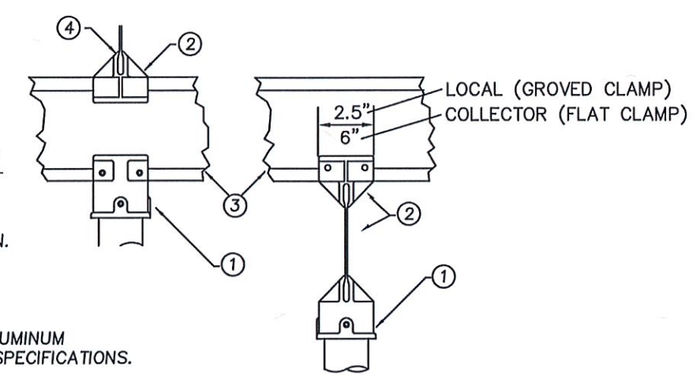

NOTE: DRAWING NOT TO SCALE

ALL EYEBOLTS, BOLTS, NUTS, AND WASHERS SHALL BE GALV. STEEL UNLESS NOTED OTHERWISE, ALL SET SCREWS SHALL BE MIN. DIA. 1/4" STAINLESS STEEL WITH SQUARE OR HEX HEADS. ALL SPANWIRE HANGERS AND PLUMBIZERS SHALL BE CAST BRONZE.

	BY	DATE
DRAWN:	M. ABARCA	5/93
DESIGNED:		
CHECKED:		
APPROVED:		
FILENAME:	TSD5_18	

NO	REVISION	DATE	BY	APPR.
1	STD. DWG. 5–18	4/94	DRB	
2	SIGN STANDARDS	12/96	DRB	
3	STD. DWG. UPDATE	7/01	D.D.	B.B.

CITY OF SPRINGFIELD
DEPT. OF PUBLIC WORKS
TRANSPORTATION DIVISION
225 FIFTH STREET
SPRINGFIELD, OR. 97477
(541) 726–3753

SPRINGFIELD TRANSPORTATION DIVISION

ROADSIDE SIGN INSTALLATION DETAIL

STANDARD DRAWING

5–18

TAPER TYPES & FORMULAS	
TAPER	FORMULA
Merging (Lane Closure)	"L"
Shifting	"L"/2 or ½"L"
Shoulder Closure	"L"/3 or ⅓"L"
Flagging (See Drg. TM850)	50' - 100'
Downstream (Termination)	Varies (See Drawings)

★ Use Pre-Construction Posted Speed to select the Speed from the Tables below:

TEMPORARY BARRIER FLARE RATE TABLE	
★SPEED (mph)	MINIMUM FLARE RATE
≤ 30	8:1
35	9:1
40	10:1
45	12:1
50	14:1
55	16:1
60	18:1
65	19:1
70	20:1

MINIMUM LENGTHS TABLE					
"L" VALUE FOR TAPERS (ft)					BUFFER "B" (ft)
★ SPEED (mph)	W = Lane or Shoulder Width being closed or shifted				
	W ≤ 10	W = 12	W = 14	W = 16	
25	105	125	145	165	75
30	150	180	210	240	100
35	205	245	285	325	125
40	265	320	375	430	150
45	450	540	630	720	180
50	500	600	700	800	210
55	550	660	770	880	250
60	600	720	840	960	285
65	650	780	910	1000	325
70	700	840	980	1000	365
FREEWAYS					
55	1000	1000	1000	1000	250
60	1000	1000	1000	1000	285
65	1000	1000	1000	1000	325
70	1000	1000	1000	1000	365

NOTES:
- For Lane closures where W < 10', use "L" value for W = 10'.
- For Shoulder closures where W < 10', use "L" value for W = 10' or calculate "L" using formula, for Speeds ≥ 45: L = WS, Speeds < 45: $L = S^2W/60$, S = Speed, W=Width

TRAFFIC CONTROL DEVICES (TCD) SPACING TABLE				
★ SPEED (mph)	Sign Spacing (ft)			Max. Channelizing Device Spacing (ft)
	A	B	C	
20 - 30	100	100	100	20
35 - 40	350	350	350	20
45 - 55	500	500	500	40
60 - 70	700	700	700	40
Freeway	1000	1500	2640	40

NOTES:
- Place traffic control devices on 10 ft. spacing for intersection and access radii.
- When necessary, sign spacing may be adjusted to fit site conditions. Limit spacing adjustments to 30% of the "A" dimension for all speeds.

NOTES:
- When paved shoulders adjacent to excavations are less than four feet wide protect longitudinal abrupt edge as shown.
- Use aggregate wedge when abrupt edge is 2 inches or greater.

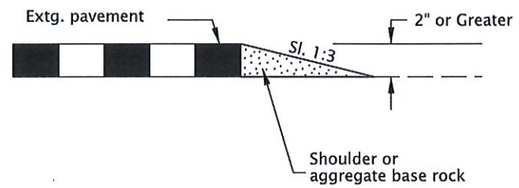

EXCAVATION ABRUPT EDGE

NOTES:
- Install PCMS beyond the outside shoulder, when possible.
- Use the appropriate type of barricade panels for PCMS location. Right shoulder, use Type B(III)R Left shoulder, use Type B(III)L
- Use six drums in shoulder taper on 20' spacing. The drums and barricade may be omitted when PCMS is placed behind a roadside barrier.
- Detail as shown is used for trailered and non-crashworthy components of:
  - Portable Traffic Signals
  - Smart Work Zone Systems

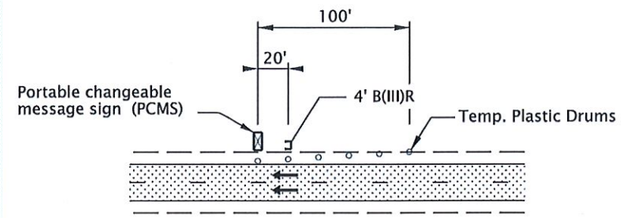

PORTABLE CHANGEABLE MESSAGE SIGN (PCMS) INSTALLATION

NOTES:
- Install Flagger Station Lighting beyond the outside shoulder, where practical.
- Use six tubular markers in shoulder taper on 10' spacing.
- Place cart / generator / power supply off of the shoulder, as far as practical.

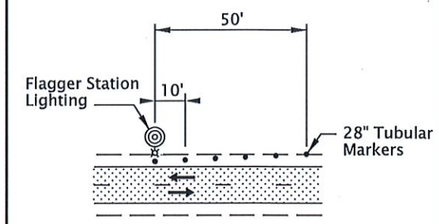

FLAGGER STATION LIGHTING DELINEATION

NOTES:
- Abrupt edges may be created by paving, operations, excavations or other roadway work. Use abrupt edge signing for longitudinal abrupt edges of 1 inch or greater.
- If the excavation is located on left side of traffic, replace the 8' B(III)R barricades with 8' B(III)L barricades and replace the "RIGHT" (CW21-8C) riders with "LEFT" (CW21-8A) riders.
- Continue signing and other traffic control devices throughout excavation area at spacings shown.
- If roll-up signs are used, attach the correct (CW21-9) plaques to the sign face using hook and loop fasteners. Place roll-up signs in advance of barricades.

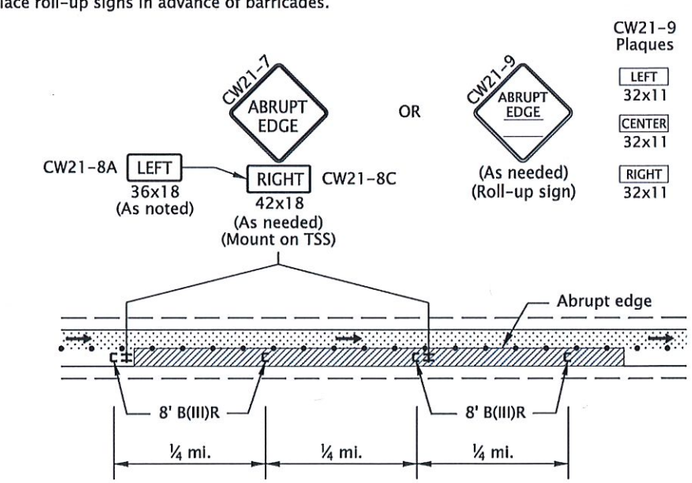

TYPICAL ABRUPT EDGE DELINEATION

GENERAL NOTES FOR ALL TCP DRAWINGS:
- Signs and other Traffic Control Devices (TCD) shown are the minimum required.
- Place a barricade approx. 20' ahead of all sequential arrow boards.
- Arrows shown in roadway are directional arrows to indicate traffic movements.
- All signs are 48" x 48" unless otherwise shown. Use flourescent orange sheeting for the background of all temporary warning signs.
- All diamond shaped warning signs mounted on barrier sign supports shall be 36" by 36". All other signs mounted on barrier sign supports shall not exceed 12 sq. ft. in total sign area.
- Low speed highways have a pre-construction posted speed of 40 mph or less. High speed highways have a pre-construction posted speed of 45 mph or higher.
- Do not locate sign supports in locations designated for bicycle or pedestrian traffic.
- Combine drawing details to complete temporary traffic control for each work activity.
- To be accompanied by Dwg. Nos. TM820 & TM821.

○ ○ ○ Temp. Plastic Drums See TCD Spacing Table for max. spacing.

• • • 28" Tubular Markers See TCD Spacing Table for max. spacing.

UNDER TRAFFIC

UNDER CONSTRUCTION

CALC. BOOK NO. TM09-01

SDR DATE 01-JUL-2020

NOTE: All material and workmanship shall be in accordance with the current Oregon Standard Specifications

The selection and use of this Standard Drawing, while designed in accordance with generally accepted engineering principles and practices, is the sole responsibility of the user and should not be used without consulting a Registered Professional Engineer.

OREGON STANDARD DRAWINGS

TABLES, ABRUBT EDGE AND PCMS DETAILS

2021

DATE	REVISION DESCRIPTION

tm800.dgn 01-JUL-2020

TM800

Effective Date: June 1, 2021 - November 30, 2021

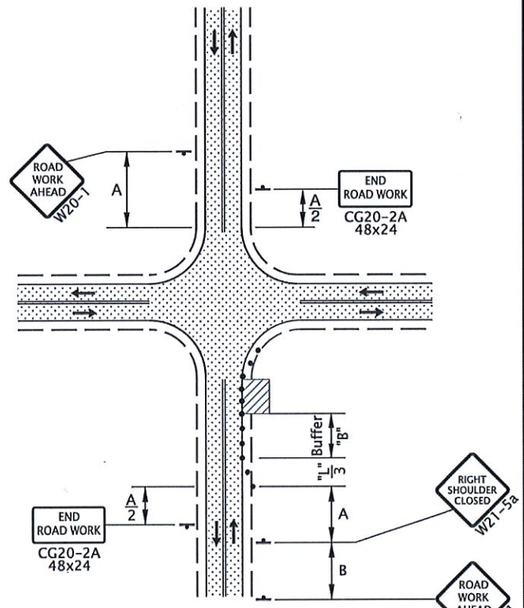

2-Lane, 2-Way
SHOULDER CLOSURE

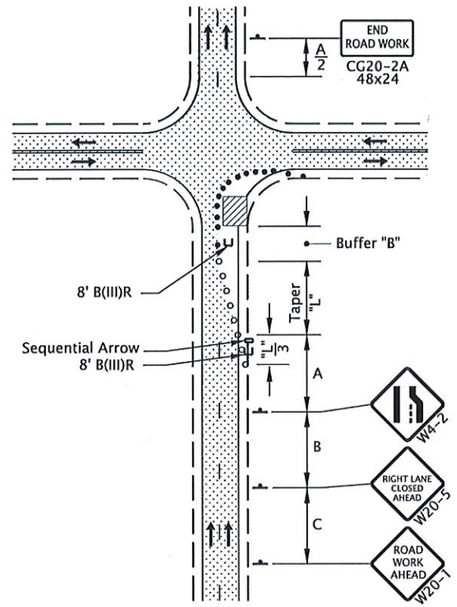

2-LANE, 1-WAY
RIGHT LANE CLOSURE

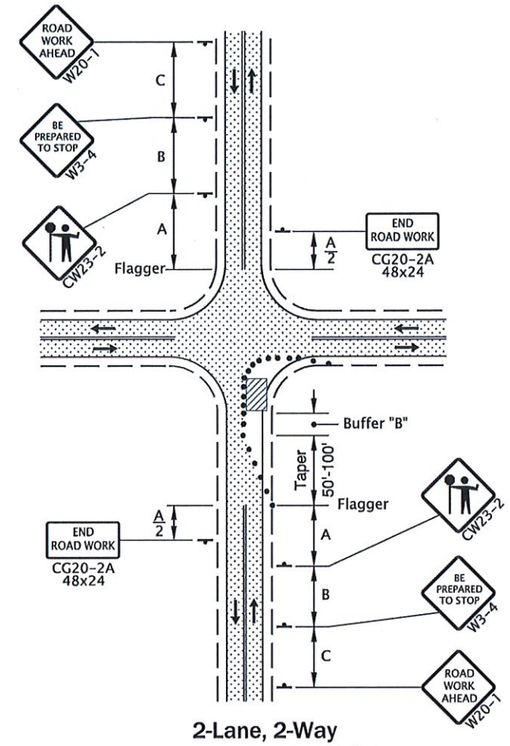

2-Lane, 2-Way
ONE LANE CLOSURE

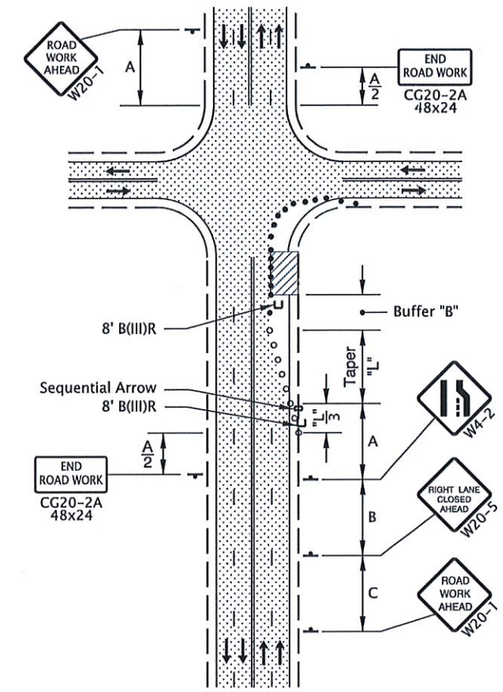

4-Lane, 2-Way
RIGHT LANE CLOSURE, NEAR SIDE

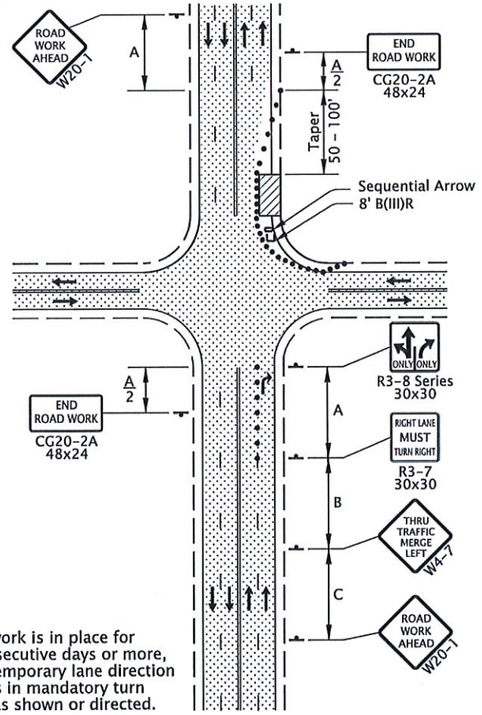

NOTES:
- When work is in place for 14 consecutive days or more, place temporary lane direction legends in mandatory turn lanes, as shown or directed.

4-Lane, 2-Way
RIGHT LANE CLOSURE, FAR SIDE

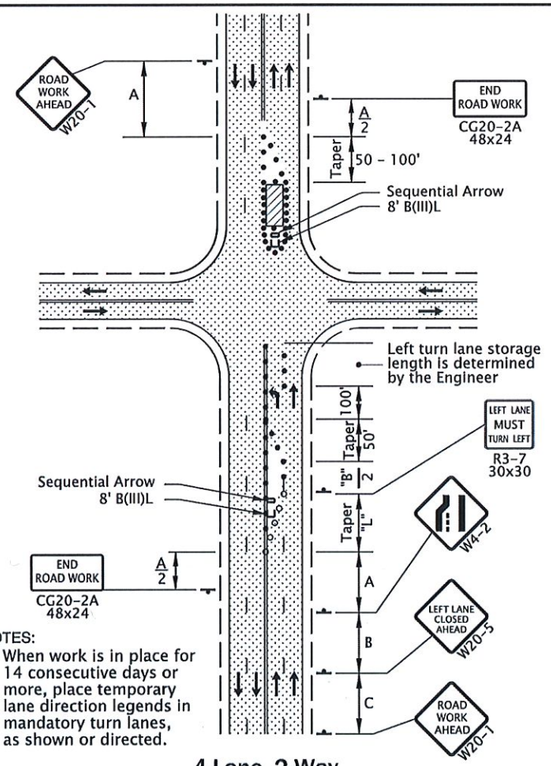

NOTES:
- When work is in place for 14 consecutive days or more, place temporary lane direction legends in mandatory turn lanes, as shown or directed.

4-Lane, 2-Way
LEFT LANE CLOSURE, FAR SIDE

GENERAL NOTES FOR ALL DETAILS:
- Additional Traffic Control Measures (TCM) may be required for all legs of the intersection.
- The "FLAGGER" (CW23-2) symbol sign shall be used only in conjunction with the "BE PREPARED TO STOP" (W3-4) sign.
- To determine Taper Length ("L") and Buffer Length ("B"), use the "MINIMUM LENGTHS TABLE" on Dwg. TM800.
- For left lane or shoulder work, place TCD to close left lane or shoulder. Use "LEFT LANE CLOSED AHEAD" (W20-5) sign, "LEFT LANE ENDS" (W4-2L) symbol sign, or "LEFT SHOULDER CLOSED" (W21-5a) sign, where applicable.
- To determine sign spacing A, B, and C, use "TRAFFIC CONTROL DEVICES (TCD) SPACING TABLE" on Dwg. TM800.
- When a through road intersects within the work zone, place a "ROAD WORK AHEAD" (W20-1) sign in advance of the intersection at sign spacing A.
- Tubular markers may be used in lane closure tapers where posted speed is 40 mph or less.
- Where shoulder width is limited, Sequential Arrow may be placed within the lane closure taper.
- Place channelizing devices around intersection radii, business accesses and driveways at 10' spacing.
- Install a "BICYCLES ON ROADWAY" (CW11-1) sign in advance of the closure when a bike lane is closed, or when the shoulder is closed and bikes are expected.
- To be accompanied by Dwg. Nos. TM820, TM821 & TM840.

• • • • • 28" Tubular Markers See TCD Spacing Table on TM800 for max. spacing.

○ ○ ○ ○ ○ Temp. Plastic Drums See TCD Spacing Table on TM800 for max. spacing.

UNDER TRAFFIC

UNDER CONSTRUCTION

CALC. BOOK NO. N/A

SDR DATE 01-JUL-2020

NOTE: All material and workmanship shall be in accordance with the current Oregon Standard Specifications

The selection and use of this Standard Drawing, while designed in accordance with generally accepted engineering principles and practices, is the sole responsibility of the user and should not be used without consulting a Registered Professional Engineer.

OREGON STANDARD DRAWINGS

INTERSECTION WORK ZONE DETAILS

2021

DATE	REVISION DESCRIPTION

tm841.dgn 01-JUL-2020

TM841

Effective Date: June 1, 2021 - November 30, 2021

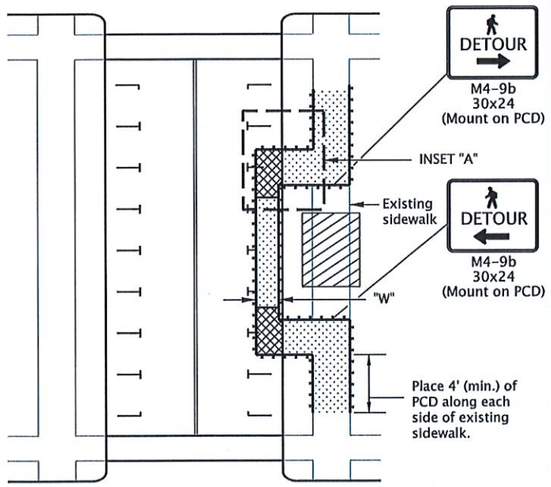

Within Roadway
SIDEWALK DIVERSION

NOTES:

- Place or construct temp. sidewalk ramp, as needed.
- For roadways with a pre-construction posted speed of 40 mph or less.
- See inset "A" for Temp. Sidewalk Ramp details.
- "W" = 60", or, where 60" width cannot be maintained through the entire route, provide 48" min. width with 60" x 60" passing spaces every 200 ft.
- Use temporary ADA compliant surfaces to cross planter strips or other non-traversable surfaces.

NOTES:

- Ramp size will vary. Ramp must meet ADA requirements incl. max design grade of 7.5% and max design cross slope of 1.5%.

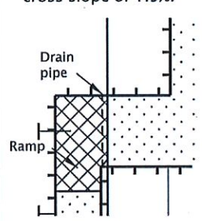

INSET "A"
(Temp. Sidewalk Ramp)

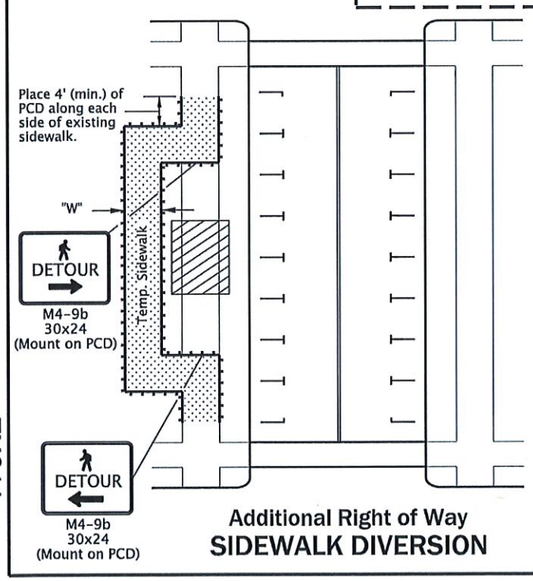

Additional Right of Way
SIDEWALK DIVERSION

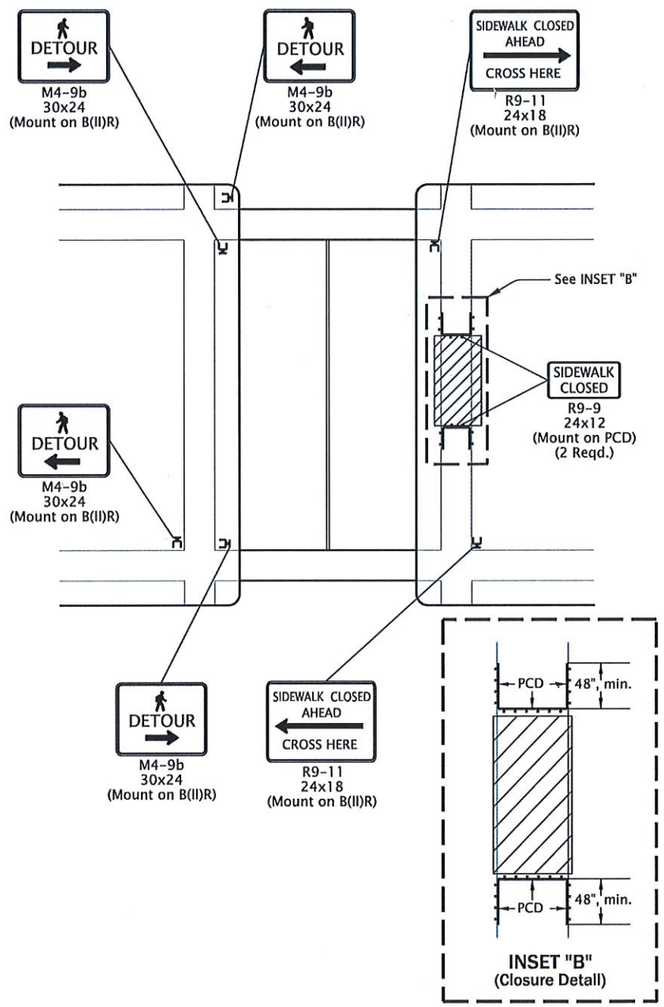

INSET "B"
(Closure Detail)

SIDEWALK CLOSURE, MIDBLOCK

NOTE:

- Limit work to one corner at a time to minimize pedestrian distruption and detour length.

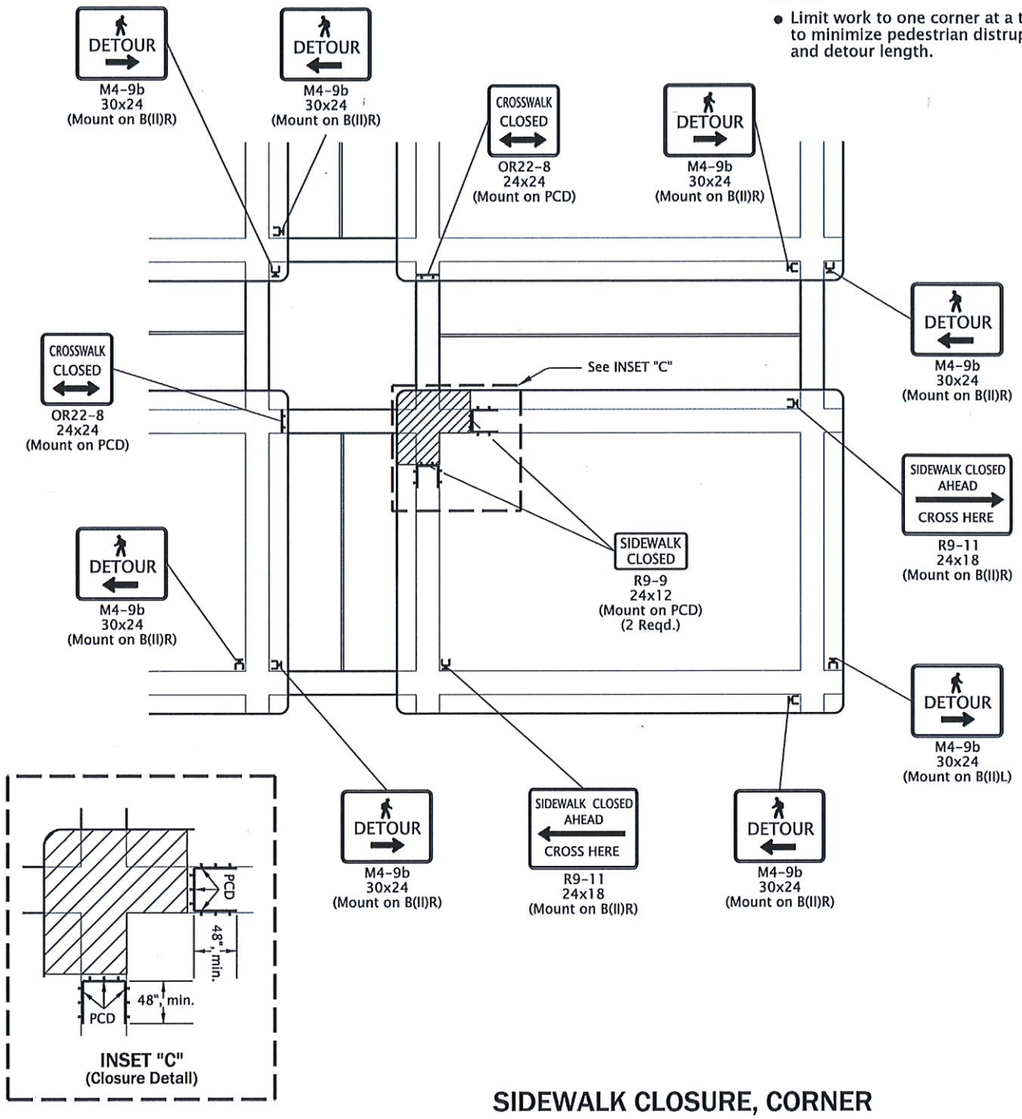

INSET "C"
(Closure Detail)

SIDEWALK CLOSURE, CORNER

GENERAL NOTES FOR ALL DETAILS:

- When closing or relocating crosswalks or other pedestrian facilities provide ADA compliant facilities. Include accessibility features consistent with existing pedestrian facilities by providing adequate slope transitions and surfacing.
- Provide non-slip, 60 inch minimum wide surface through entire pedestrian route. If not possible, provide 48" min. width with 60" x 60" passing spaces every 200 feet along the route.
- Only TCD for pedestrians are shown. Other devices may be necessary to control vehicular traffic.
- Stage work, as necessary, to provide a temporary pedestrian access route at all times. For roadways with no available detours, maintain one open sidewalk at all times.
- Minimize pedestrian out-of-direction travel.
- To be accompanied by Dwg. Nos. TM820 & TM821.

UNDER PEDESTRIAN TRAFFIC
UNDER CONSTRUCTION
PEDESTRIAN CHANNELIZING DEVICE (PCD)

CALC. BOOK NO. N/A

SDR DATE 01-JUL-2020

NOTE: All material and workmanship shall be in accordance with the current Oregon Standard Specifications

The selection and use of this Standard Drawing, while designed in accordance with generally accepted engineering principles and practices, is the sole responsibility of the user and should not be used without consulting a Registered Professional Engineer.

OREGON STANDARD DRAWINGS

TEMPORARY PEDESTRIAN ACCESSIBLE ROUTES

2021

DATE	REVISION DESCRIPTION

tm844.dgn 01-JUL-2020

TM844

Effective Date: June 1, 2021 - November 30, 2021

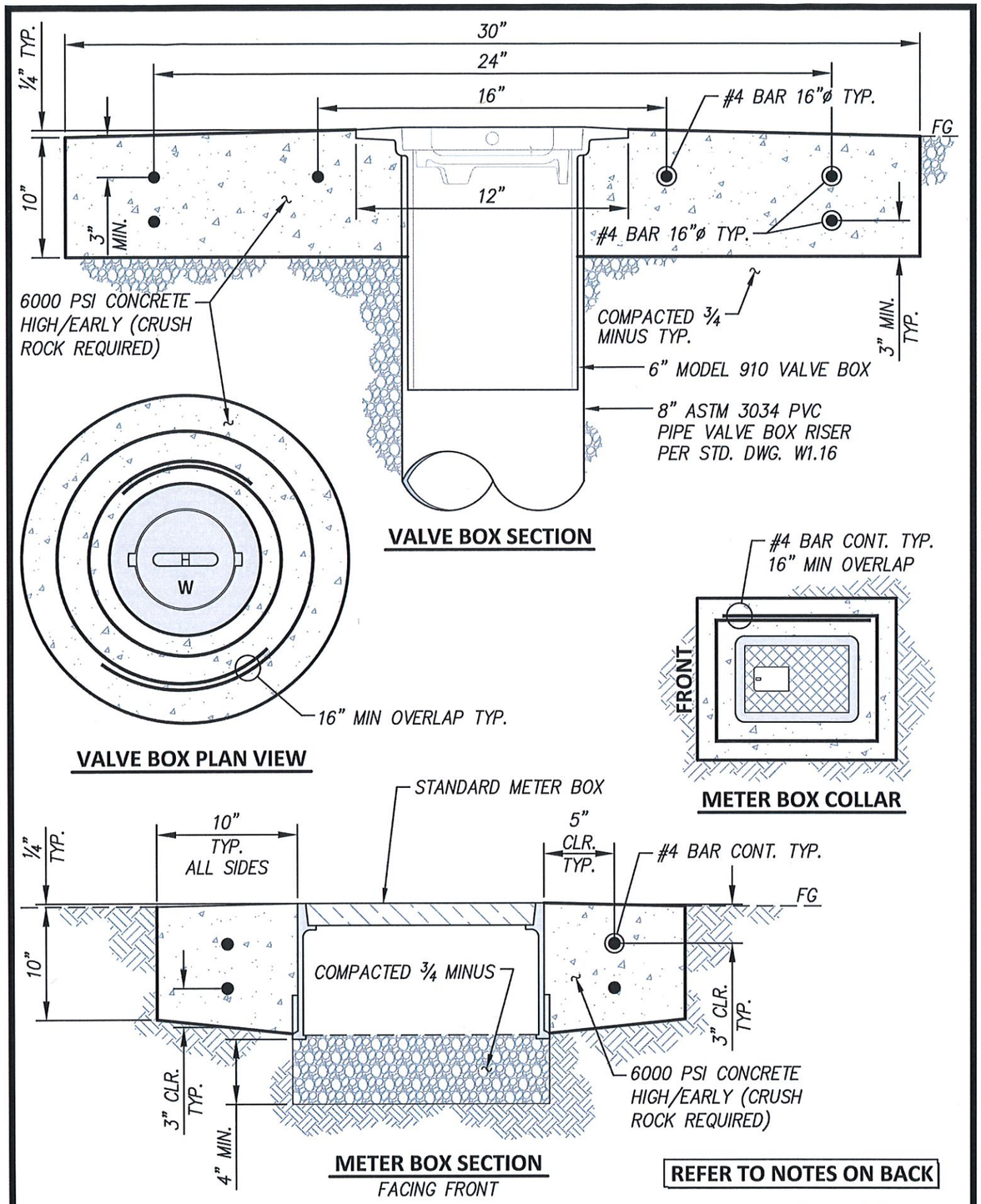

REFER TO NOTES ON BACK

SCALE: N.T.S.	SUB SPRINGFIELD UTILITY BOARD	WATER DIVISION STANDARD DRAWING	DRAWING NUMBER
DRAWN BY: LSB		VALVE LID AND METER BOX CONCRETE COLLARS	W1.16.1
CONSTRUCTION:			REVISED: 03-18-2021
ENGINEERING: KPL			

S:\Engineering\Standards\Drawings\W1.16.1.dwg – Mar 23, 2021 – 2:24pm Plotted by: Laddb FF DWG. No.: N/A

SPECIFICATION NOTE:

THE SPECIFICATION REFERENCE(S), IF PROVIDED, IN THIS STANDARD ARE FOR INFORMATIONAL PURPOSES ONLY AND MAY NOT BE COMPLETE. IT IS THE CONTRACTORS RESPONSIBILITY TO ENSURE THAT ANY INSTALLATION PERFORMED MEETS THE REQUIREMENTS SET FORTH IN THE STANDARD CONSTRUCTION SPECIFICATIONS AND ANY OTHER APPLICABLE STANDARD.

NOTES:

1. *MODIFICATIONS TO CONCRETE VALVE COLLARS MAY BE REQUIRED FOR VALVES IN CLUSTERS. ANY MODIFICATION TO CONCRETE COLLARS SHALL BE APPROVED BY WSC ENGINEERING PRIOR TO PLACEMENT.*

S:\Engineering\Standards\Drawings\W1.16.1.dwg – Mar 23, 2021 – 2:24pm Plotted by: Laddb FF DWG. No.: N/A

CITY OF SPRINGFIELD
DEVELOPMENT & PUBLIC WORKS

Project P21182
MEADOW PARK RAMP

CONSTRUCTION OF NEW ADA RAMP
ACCESS TO MEADOW PARK AREA.

PROJECT LOCATION

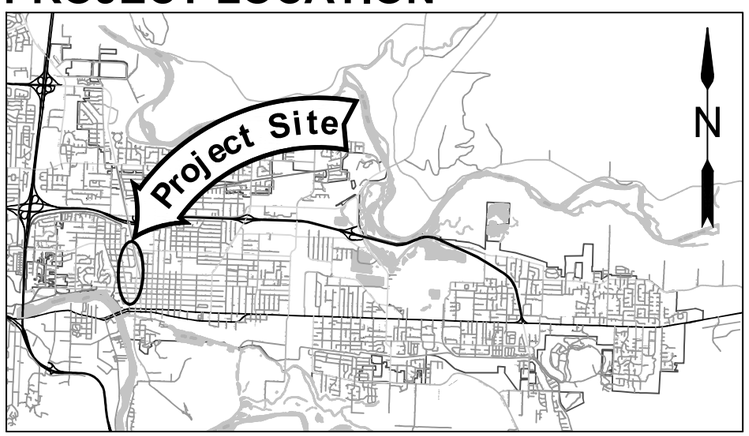

VICINITY MAP

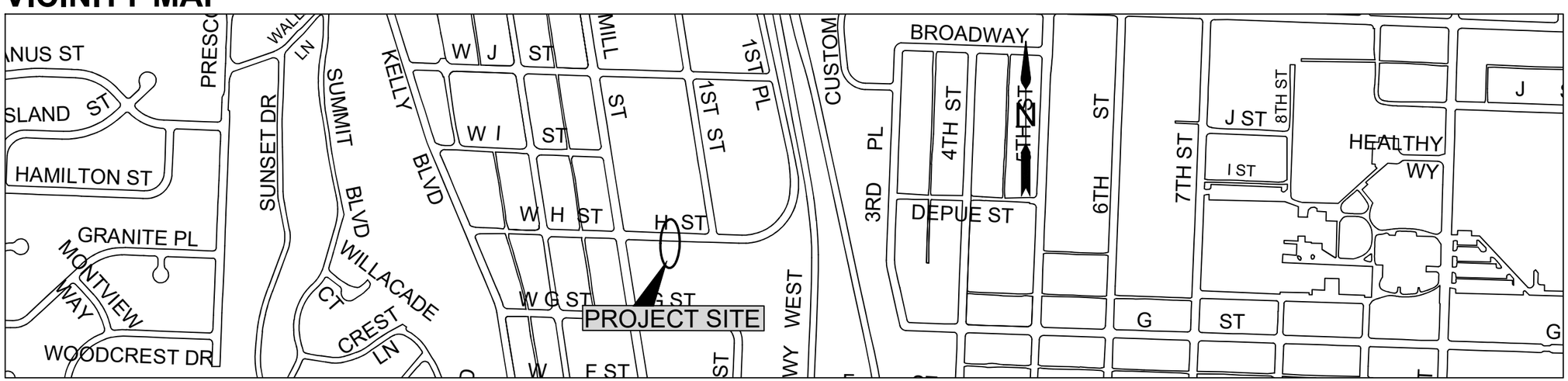

SHEET INDEX	
SHEET NO.	**DESCRIPTION**
A01-A04	TITLE, LEGEND, ABBR., LAYOUT, GEN NOTES
B01-B02	CURB RAMP PAY LIMITS AND DETAILS
C01	GENERAL CONSTRUCTION DETAILS
E01-E02	TEMPORARY TRAFFIC CONTROL DETAILS
F01-F02	EROSION AND SEDIMENT CONTROL DETAILS
L01	SIGN INSTALLATION PLAN

STANDARD DRAWINGS	
DWG NO.	DESCRIPTION
3-8	CURB AND GUTTER REMOVAL AND REPLACEMENT
3-12	SIDEWALK CONSTRUCTION
5-18	ROADSIDE SIGN INSTALLATION DETAIL

No.	Revision/Issue	Date

811
Know what's **below.**
Call before you dig.

UTILITY LOCATIONS ARE APPROXIMATE. THE CONTRACTOR SHALL BE RESPONSIBLE FOR DETERMINING UTILITY LOCATIONS PRIOR TO BEGINNING OF CONSTRUCTION. THESE PLANS MAY NOT SHOW ALL UTILITIES OR THE CORRECT LOCATIONS.

Project P21182
MEADOW PARK RAMP

City of Springfield
PUBLIC WORKS / ENGINEERING
225 FIFTH STREET, SPRINGFIELD, OR 97477
PHONE (541) 726-3753 FAX (541) 726-3689
INTERNET www.springfield-or.gov

SPRINGFIELD OREGON

REGISTERED PROFESSIONAL ENGINEER
58377PE
Kristi Krueger
P.E.
OREGON
JULY 15, 2003
KRISTI S. KRUEGER

Digitally signed by Kristi Krueger P.E.
DN: cn=Kristi Krueger P.E., o=City of Springfield, ou=Engineering, email=kkrueger@springfield-or.gov, c=US
Date: 2022.10.24 08:54:08 -07'00'

EXP DATE: 06-30-2023

TITLE SHEET

NO SCALE	SHEET A01 OF 13
DRAWN BY: J. GRASSETH	
DESIGNED BY: K. KRUEGER	
CHECKED BY: J. PASCHALL	

October 18, 2022

C:\Users\jgrasseth\City Of Springfield, OR\DPW-CMD-Engineering - Capital Projects\Projects Folders\TRAFFIC\P21182 Meadow Park Ramp\02-Design\Eng Tech Working Folder (OPTIONAL)\A_ Title Sheets_.dwg

ABBREVIATIONS

AB	AGGREGATE BASE	DET	DETAIL	IN	INCH, INCHES	RAD	RADIUS
ABAN	ABANDON(ED)	DI	DUCTILE IRON	INV	INVERT	RCP	REINFORCED CONCRETE PIPE
ACP	ASPHALTIC CONCRETE PAVEMENT	DIA	DIAMETER	LAT	LATERAL	RD	ROAD
AD	AREA DRAIN	DR	DRIVE	LDAP	LAND DRAINAGE & ALTERATION PERMIT	REINF	REINFORCE(D)(ING)(MENT)
ADA	AMERICANS WITH DISABILITIES ACT	DWG	DRAWING	LF	LINEAL FEET	REQ'D	REQUIRED
ADJ	ADJUST	DWY	DRIVEWAY	LP	LOW POINT	RESTR	RESTRAINED
AL	ALUMINUM	EA	EACH	LPR	LOW PRESSURE	ROW	RIGHT-OF-WAY
APPROX	APPROXIMATELY	EC	END CURVE	LT	LEFT	RRFB	RECTANGULAR RAPID FLASHING BEACON
APPVD	APPROVED	EDOP	EDGE OF PAVEMENT	MATL(S)	MATERIALS	RT	RIGHT
ARV	AIR RELEASE VALVE	EG	EXISTING GRADE	MAX	MAXIMUM	S/W	SIDEWALK
ASSY	ASSEMBLY	EL	ELEVATION	MFR(S)	MANUFACTURER(S)	S	SLOPE
ATB	ASPHALT TREATED BASE	ELEC	ELECTRIC, ELECTRICAL	MH(S)	MANHOLE(S)	SCHED	SCHEDULE
APPROX	APPROXIMATELY	EOP	END OF PROJECT	MHSD	MANHOLE STORM DRAIN	SD	STORM DRAIN
APVD	APPROVED	EP	EDGE OF PAVEMENT	MHSS	MANHOLE SANITARY SEWER	SDMH	STORM DRAIN MANHOLE
BC	BEGIN CURVE	EQ	EQUAL	MIN	MINIMUM	SERV	SERVICE
BLDG	BUILDING	EQUIP	EQUIPMENT	MISC	MISCELLANEOUS	SHT(S)	SHEET(S)
BM	BENCHMARK	ESMT	EASEMENT	MJ	MECHANICAL JOINT	SL	SLOPE
BO	BLOWOFF	EVC	END VERTICAL CURVE	MON	MONUMENT	SPECS	SPECIFICATIONS
BOP	BEGINNING OF PROJECT	EX	EXISTING	MUTCD	MANUAL ON UNIFORM TRAFFIC CONTROL DEVICES	SQ	SQUARE
BSW	BACK OF SIDEWALK	EXCAV	EXCAVATION	NO	NUMBER	SQFT	SQUARE FOOT, SQUARE FT
BTM	BOTTOM	FAB	FABRICATE	NTS	NOT TO SCALE	SS	SANITARY SEWER
BVC	BEGIN VERTICAL CURVE	FD	FLOOR DRAIN	OC	ON CENTER	SST	STAINLESS STEEL
C/G	CURB & GUTTER	FH	FIRE HYDRANT	OD	OUTSIDE DIAMETER	ST	STREET
CB	CATCH BASIN	FI	FIELD INLET	ODOT	OREGON DEPARTMENT OF TRANSPORTATION	STA	STATION
CCP	CONCRETE CULVERT PIPE	FIN GR	FINISHED GRADE	OVHD	OVERHEAD UTILITY	STD	STANDARD
CFFL	CURB FACE FLOW LINE	FL	FLOW LINE	P	POWER	STL	STEEL
CI	CURB INLET	FLG	FLOW LINE OF GUTTER	P/L	PROPERTY LINE	SUB	SPRINGFIELD UTILITY BOARD
CIP	CAST IN PLACE	FM	FORCE MAIN	PC	POINT OF CURVATURE	SW	SIDEWALK
CL	CENTER LINE	FT	FOOT, FEET	PCCP	PORTLAND CEMENT CONCRETE	TB	THRUST BLOCK
CLS	CLASS	FTG	FITTING	PERM	PERMANENT	TCP	TRAFFIC CONTROL PLAN
CO	CLEANOUT	G	GAS	PI	POINT OF INTERSECTION	TEL	TELEPHONE
CONC	CONCRETE	GB	GRADE BREAK	POLY	POLYETHYLENE	TEMP	TEMPORARY
CONST	CONSTRUCT, CONSTRUCTION	GALV	GALVANIZED	PRC	POINT OF REVERSE CURVATURE	TFC	TOP FACE OF CURB
CONT	CONTINUOUS	GR	GRADE	PRESS	PRESSURE	THK	THICK
COP	COPPER	GRVL	GRAVEL	PROP	PROPOSED	THRU	THROUGH
COR	CORNER	GV	GATE VALVE	PS	PUMP STATION	TOC	TOP OF CURB
COS	CITY OF SPRINGFIELD	HMAC	HOT MIX ASPHALT CONCRETE	PT	POINT OF TANGENCY	TV	TELEVISION
CPLG	COUPLING	HORIZ	HORIZONTAL	PUGD	UNDERGROUND POWER	TYP	TYPICAL
CR	CRUSHED ROCK	HP	HIGH POINT	PV	PLUG VALVE	VERT	VERTICAL(LY)
CTB	CONCRETE TREATED BASE	HPR	HIGH PRESSURE	PVC	POLYVINYL CHLORIDE	W	WATER
CV	CHECK VALVE	HWY	HIGHWAY	PVI	POINT OF VERTICAL INTERSECTION	WM	WATER METER
CY	CUBIC YARD	ID	INSIDE DIAMETER	PVMT	PAVEMENT	WWMH	WASTEWATER MANHOLE
D	DRAIN	IE	INVERT ELEVATION	R	RATE	VC	VERTICAL CURVE

SECTION, MATCHLINE, AND DETAIL DESIGNATIONS

SECTION DESIGNATIONS

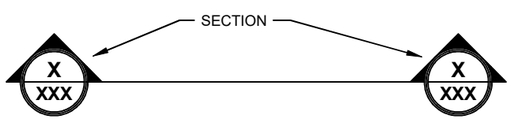

DETAIL DESIGNATIONS

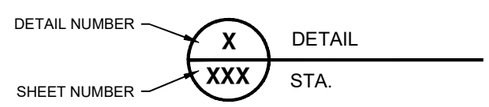

MATCHLINE DESIGNATIONS

MATCH LINE	SEE SHEET
STA XX+XX	XXX

LEGEND

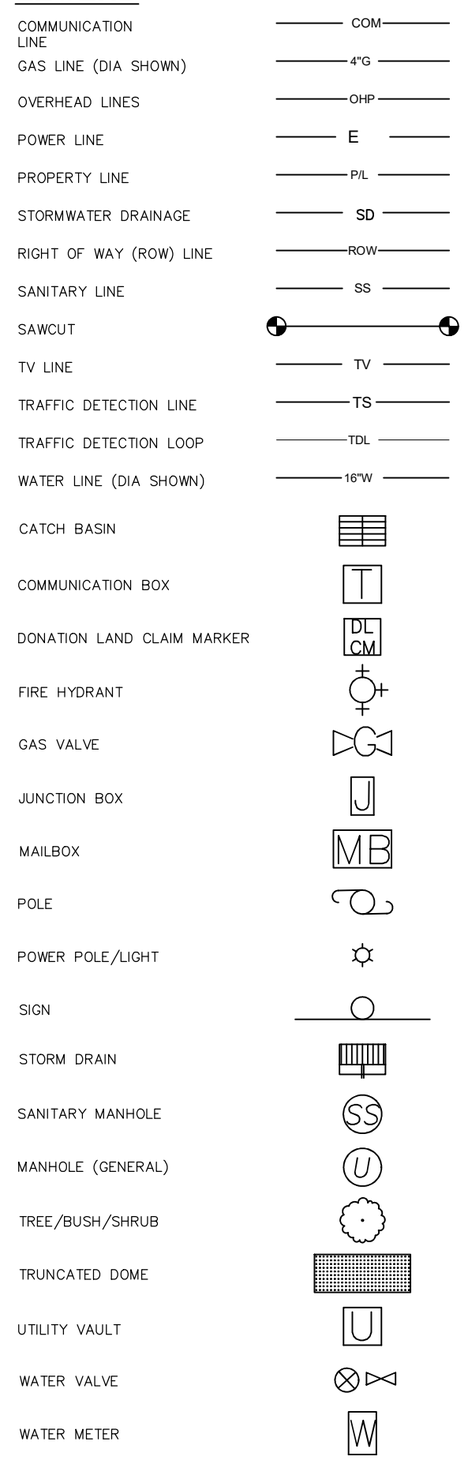

No.	Revision/Issue	Date

811
Know what's **below.**
Call before you dig.

UTILITY LOCATIONS ARE APPROXIMATE. THE CONTRACTOR SHALL BE RESPONSIBLE FOR DETERMINING UTILITY LOCATIONS PRIOR TO BEGINNING OF CONSTRUCTION. THESE PLANS MAY NOT SHOW ALL UTILITIES OR THE CORRECT LOCATIONS.

Project P21182
MEADOW PARK RAMP

City of Springfield

PUBLIC WORKS / ENGINEERING
225 FIFTH STREET, SPRINGFIELD, OR 97477
PHONE (541) 726-3753 FAX (541) 726-3689
INTERNET www.springfield-or.gov

SPRINGFIELD OREGON

REGISTERED PROFESSIONAL ENGINEER
58377PE
Kristi Krueger P.E.
Digitally signed by Kristi Krueger P.E.
DN: cn=Kristi Krueger P.E., o=City of Springfield, ou=Engineering, email=kkrueger@springfield-or.gov, c=US
Date: 2022.10.24 08:54:42 -07'00'
OREGON
JULY 15, 2003
KRISTI S. KRUEGER

EXP DATE: 06-30-2023

ABBREVIATIONS, LEGEND

NO SCALE	SHEET A02 OF 13
DRAWN BY: J. GRASSETH	
DESIGNED BY: K. KRUEGER	
CHECKED BY: J. PASCHALL	

October 18, 2022

C:\Users\jgrasseth\City Of Springfield, OR\DPW-CMD-Engineering - Capital Projects\Projects Folders\TRAFFIC\P21182 Meadow Park Ramp\02-Design\Eng Tech Working Folder (OPTIONAL)\A_ Title Sheets_.dwg

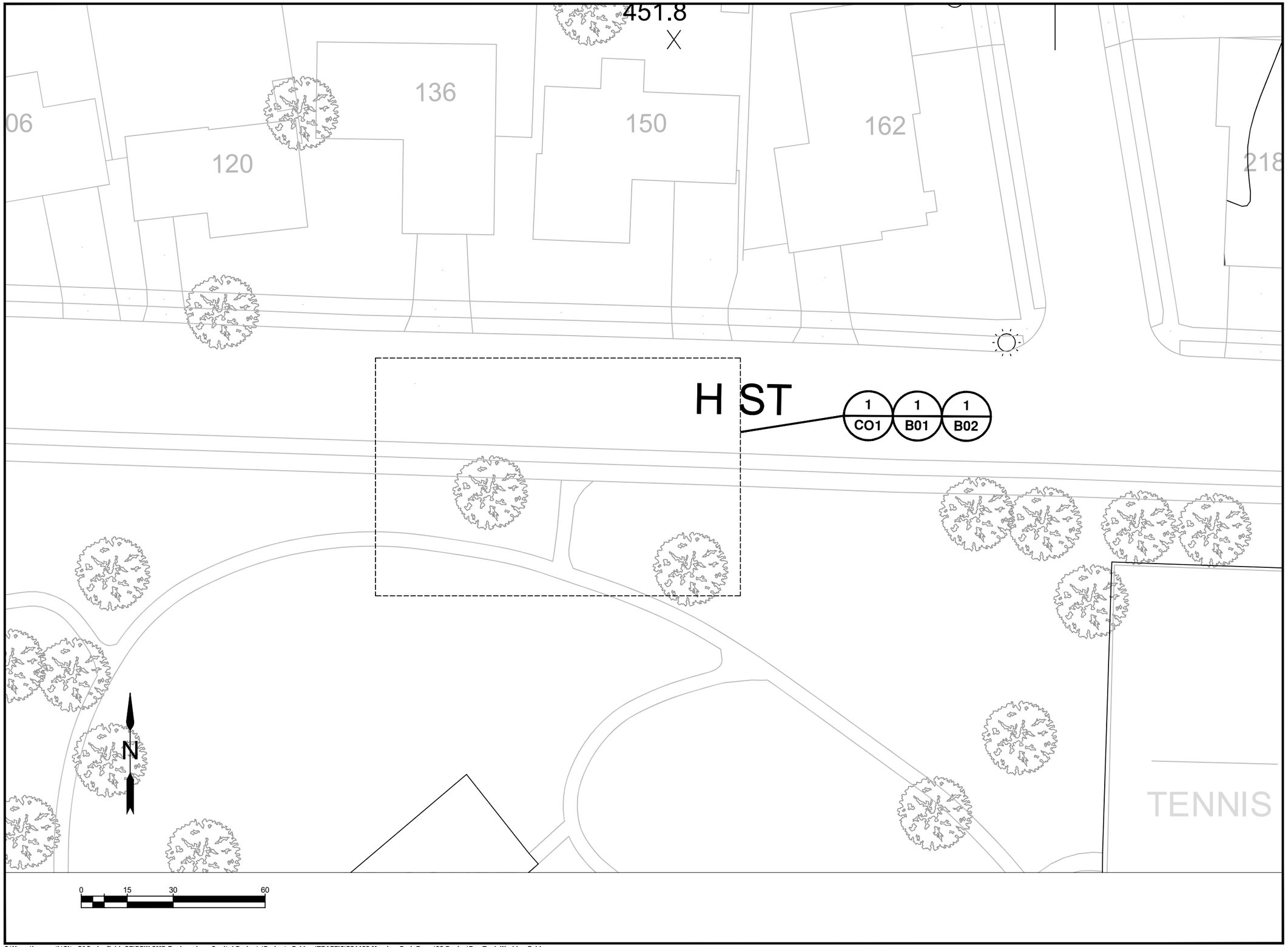

No.	Revision/Issue	Date

Know what's **below.**
Call before you dig.

UTILITY LOCATIONS ARE APPROXIMATE. THE CONTRACTOR SHALL BE RESPONSIBLE FOR DETERMINING UTILITY LOCATIONS PRIOR TO BEGINNING OF CONSTRUCTION. THESE PLANS MAY NOT SHOW ALL UTILITIES OR THE CORRECT LOCATIONS.

Project P21182
MEADOW PARK RAMP

City of Springfield
PUBLIC WORKS / ENGINEERING
225 FIFTH STREET, SPRINGFIELD, OR 97477
PHONE (541) 726-3753 FAX (541) 726-3689
INTERNET www.springfield-or.gov

REGISTERED PROFESSIONAL ENGINEER
58377PE
Kristi Krueger P.E.
OREGON
JULY 15, 2003
KRISTI S. KRUEGER

Digitally signed by Kristi Krueger P.E.
DN: cn=Kristi Krueger P.E., o=City of Springfield, ou=Engineering, email=kkrueger@springfield-or.gov, c=US
Date: 2022.10.24 08:55:11 -07'00'

EXP DATE: 06-30-2023

GENERAL LAYOUT

SCALE: 1" = 30'	SHEET A03 OF 13
DRAWN BY: J. GRASSETH	
DESIGNED BY: K. KRUEGER	
CHECKED BY: J. PASCHALL	

October 18, 2022

C:\Users\jgrasseth\City Of Springfield, OR\DPW-CMD-Engineering - Capital Projects\Projects Folders\TRAFFIC\P21182 Meadow Park Ramp\02-Design\Eng Tech Working Folder (OPTIONAL)\A_ Title Sheets_.dwg

GENERAL CONSTRUCTION NOTES:

A. ALL MATERIALS AND WORKMANSHIP WITHIN THE PUBLIC RIGHT-OF-WAY OR PUBLIC EASEMENTS SHALL MEET STANDARD SPECIFICATIONS FOR CONSTRUCTION, AS SPECIFIED IN SECTION 'A' OF THE SPECIAL PROVISIONS IN ADDITION TO ALL OTHER SPECIFICATIONS REFERENCED OR INCLUDED, AND IN ADDITION TO THESE PLANS.

B. OREGON LAW REQUIRES THE CONTRACTOR TO FOLLOW RULES ADOPTED BY THE OREGON UTILITY NOTIFICATION CENTER. THOSE RULES ARE SET FORTH IN OAR 952-001-0010 THROUGH OAR 952-001-0100. THE CONTRACTOR MAY OBTAIN COPIES OF THE RULES BY CALLING THE CENTER. NOTE: THE TELEPHONE NUMBER FOR THE OREGON UTILITY NOTIFICATION CENTER IS (800) 332-2344 OR 811.

C. LOCATION AND/OR DEPTH OF EXISTING UTILITIES SHOWN ON PLANS ARE APPROXIMATE. ALL UTILITIES MAY NOT APPEAR ON PLANS. IT IS THE CONTRACTOR'S RESPONSIBILITY TO CONTACT ALL UTILITY COMPANIES FOR UNDERGROUND LOCATION OF FACILITIES AT LEAST 48 HOURS PRIOR TO EXCAVATING OR "POTHOLING". THE "ONE-CALL" NUMBER (800) 332-2344 OR 811.

D. CONTRACTOR SHALL BE RESPONSIBLE FOR COORDINATION WITH UTILITY COMPANIES ON THE TIMING OF INSTALLATION OF THEIR FACILITIES.

E. ALL SANITARY AND STORM SEWER CONNECTIONS TO EXISTING CITY OWNED FACILITIES (PIPE, CATCH BASINS, MANHOLES, ETC.) SHALL BE INSPECTED BY THE CONTRACTOR AND THE CITY'S DEVELOPMENT AND PUBLIC WORKS OPERATIONS DEPARTMENT PRIOR TO HOOK UP. CONTACT OPERATIONS AT (541-726-3761) OR CITY CONSTRUCTION INSPECTOR NO LESS THAN 48 HOURS PRIOR TO DESIRED INSPECTION TIME.

F. WHERE CONNECTING TO AN EXISTING PIPE. THE CONTRACTOR SHALL EXPOSE THE END OF THE EXISTING PIPE AND ALLOW THE ENGINEER TO VERIFY EXACT LOCATION AND ELEVATION, CONDITION, AND POSITIVE FLOW BEFORE LAYING ANY NEW PIPE ON THAT SYSTEM.

G. THE SEWER GRADE SHALL BE PER THE PLANS SPECIFICATIONS AND WITH THE MINIMUM COVER AS SHOWN ON THE PLANS

H. THE CONTRACTOR SHALL INTERNALLY TELEVISION INSPECT THE SEWER AFTER ALL BACKFILL AND BEFORE THE FINAL LIFT OF ASPHALT PAVING. THE CONTRACTOR SHALL SUPPLY THE CITY WITH A WRITTEN T.V. REPORT AND VIDEO TAPE OR DVD FOR CITY APPROVAL AT LEAST 2 WORKING DAYS BEFORE THE PRE-PAVING MEETING.

I. CONTRACTOR TO SCHEDULE A PRE-PAVING CONFERENCE 24 HOURS PRIOR TO PAVING. CONTACT THE CONSTRUCTION INSPECTOR.

J. ALL JOINTS BETWEEN EXISTING and NEW ASPHALT PAVING SHALL BE SEALED WITH POLYMERIZED ASPHALT AND SANDED TO PREVENT PICK UP.

K. COMPACTION REQUIREMENTS:

LAYER	RATE	TEST
SUBGRADE	95%	T99
CRUSHED ROCK	95%	T180
ASPHALT (LOCAL)	90%	RICE
ASPHALT (COLLECTOR/ARTERIAL)	92%	RICE

L. CONCRETE COMPRESSIVE STRENGTH REQUIREMENTS (PSI):

CONCRETE USE	FIELD	LABORATORY
SIDEWALK/ADA RAMPS	3000	3450
CURBS/GUTTERS	3500	4025
DRIVEWAYS	3500	4025
PAVEMENT	4000	4600

M. CONCRETE TESTING TO BE PERFORMED BY AND COORDINATED WITH LANE COUNTY. FOUR (4) SETS ON CONCRETE CYLINDERS WILL BE COLLECTED FOR EACH POUR AS DETERMINED BY THE ENGINEER. TYPICALLY, TESTING WILL BE PERFORMED TO DETERMINE THREE (3)-DAY, SEVEN (7)-DAY, AND 28-DAY COMPRESSIVE STRENGTH OF CONCRETE SAMPLES; SCHEDULE MAY BE ALTERED BY THE ENGINEER. TESTING TO BE PERFORMED PER APWA STANDARD SPECIFICATIONS.

N. THIS PROJECT SHALL COMPLY WITH THE AMERICAN DISABILITIES ACT REQUIREMENTS SUCH AS INCORPORATION OF DESIGN CRITERIA FOR RAMPS, MAXIMUM PROFILE AND CROSS SECTION SLOPES FOR SIDEWALKS, UPGRADING EXISTING FACILITIES WHERE MAJOR CONSTRUCTION IS OCCURRING, AND BUILDING WARNING FOR OBJECTS IN SIDEWALK SUCH AS CURBING OR LANDSCAPING AROUND MAILBOXES.

O. CONTRACTOR IS RESPONSIBLE TO OBTAIN APPLICABLE PERMITS FROM OTHER AGENCIES WITH JURISDICTIONS SUCH AS LANE COUNTY, OREGON DEPARTMENT OF TRANSPORTATION, OREGON DIVISION OF STATE LANDS, THE ARMY CORPS OF ENGINEERS, OR THE DEPARTMENT OF ENVIRONMENTAL QUALITY.

P. ALL IMPROVEMENTS THAT WILL BE PRIVATELY OWNED AND MAINTAINED WILL BE BOUND BY THE CURRENT REQUIREMENTS OF THE STATE OF OREGON STRUCTURAL SPECIALTY CODE, PLUMBING SPECIALTY CODE, AND/OR CITY OF SPRINGFIELD BUILDING DIVISION REQUIREMENTS. CONTRACTOR IS RESPONSIBLE TO OBTAIN APPLICABLE PERMITS FROM OTHER CITY DEPARTMENTS PRIOR TO DOING PRIVATE WORK.

Q. EROSION CONTROL MEASURES SHALL BE IN PLACE PRIOR TO THE START OF CONSTRUCTION. SEE EROSION CONTROL PLAN.

R. STREET TREES: ONLY STREET TREES WITH A MINIMUM TRUNK CALIPER OF 2 IN. MEASURED 6 IN. ABOVE THE ROOT STEM SHALL BE SELECTED FOR PLANTING.

S. A PRE-CONSTRUCTION CONFERENCE IS REQUIRED BEFORE START OF CONSTRUCTION. ALL UTILITIES, CONTRACTORS and CITY REPRESENTATIVES SHALL HAVE RECEIVED THE FINAL APPROVED PLANS AT LEAST 5 WORKING DAYS PRIOR TO THE PRE CONSTRUCTION CONFERENCE.

T. THE ENGINEER AND/OR CITY HAVE THE RIGHT TO REQUIRE ADDITIONAL WORK NOT SHOWN HEREIN BUT NECESSARY FOR THE SUCCESSFUL COMPLETION OF THE PROJECT. STD.SPEC. 104.08.

U. REQUESTS BY THE CONTRACTOR FOR CHANGES SHALL BE APPROVED BY THE ENGINEER AND THE CITY IN WRITING PRIOR TO IMPLEMENTATION.

V. CONTRACTOR SHALL BE AWARE IF PAVING IS NOT SCHEDULED OR DOES NOT OCCUR PRIOR TO OCTOBER 15TH, WET WEATHER PROVISIONS INCLUDING ADDITIONAL ROCK SUBSTRUCTURE AND GEOTEXTILE FABRIC SHALL USED. REFER TO STANDARD SPECIFICATION SECTION 301.1.01 AND THE TYPICAL CROSS SECTIONS CONTAINED HEREIN FOR DETAILS.

W. THE CONTRACTOR SHALL VERIFY EACH EXISTING SANITARY AND STORM CONNECTION.

No.	Revision/Issue	Date

811 Know what's below. Call before you dig.

UTILITY LOCATIONS ARE APPROXIMATE. THE CONTRACTOR SHALL BE RESPONSIBLE FOR DETERMINING UTILITY LOCATIONS PRIOR TO BEGINNING OF CONSTRUCTION. THESE PLANS MAY NOT SHOW ALL UTILITIES OR THE CORRECT LOCATIONS.

Project P21182
MEADOW PARK RAMP

City of Springfield
PUBLIC WORKS / ENGINEERING
225 FIFTH STREET, SPRINGFIELD, OR 97477
PHONE (541) 726-3753 FAX (541) 726-3689
INTERNET www.springfield-or.gov

SPRINGFIELD OREGON

REGISTERED PROFESSIONAL ENGINEER
58377PE
Kristi Krueger P.E.
OREGON
JULY 15, 2003
KRISTI S. KRUEGER

Digitally signed by Kristi Krueger P.E.
DN: cn=Kristi Krueger P.E., o=City of Springfield, ou=Engineering, email=kkrueger@springfield-or.gov, c=US
Date: 2022.10.24 08:55:35 -07'00'

EXP DATE: 06-30-2023

GEN. CONSTRUCTION NOTES

NO SCALE

DRAWN BY: J. GRASSETH
DESIGNED BY: K. KRUEGER
CHECKED BY: J. PASCHALL

SHEET A04 OF 13

October 18, 2022

PAY LIMIT LEGEND:

- CONCRETE ADA RAMP BOUNDARY
- 4" CONCRETE SIDEWALK/TRANSITION PANEL PAY LIMIT BOUNDARY
- CONCRETE GUTTER PAY LIMIT BOUNDARY
- LEVEL 3 ½"DENSE ASPHALT CONCRETEPAVEMENT (ACP)
- TRUNCATED DOMES

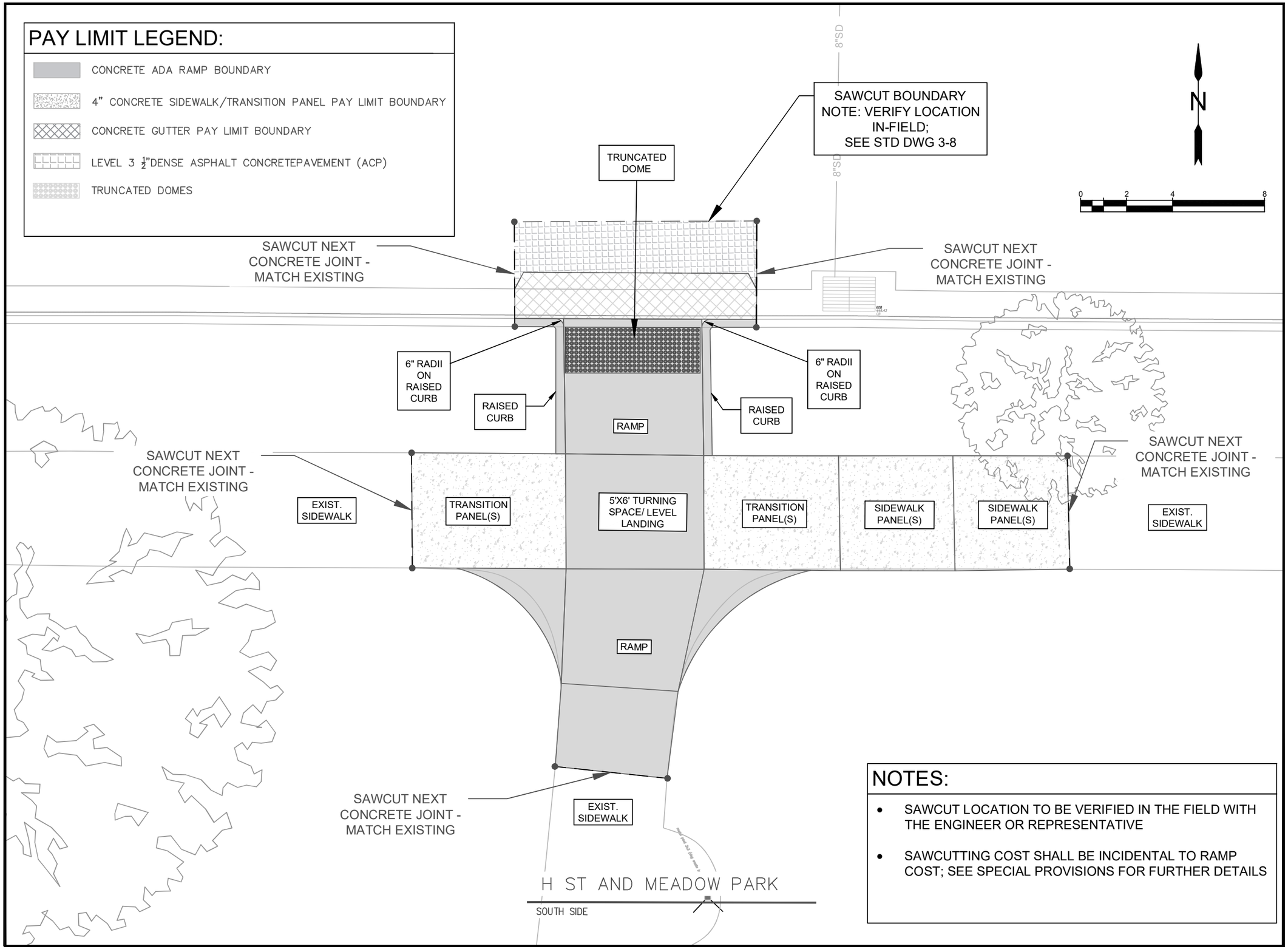

NOTES:

- SAWCUT LOCATION TO BE VERIFIED IN THE FIELD WITH THE ENGINEER OR REPRESENTATIVE
- SAWCUTTING COST SHALL BE INCIDENTAL TO RAMP COST; SEE SPECIAL PROVISIONS FOR FURTHER DETAILS

No.	Revisions/Issue	Date

811 Know what's below. Call before you dig.

UTILITY LOCATIONS ARE APPROXIMATE. THE CONTRACTOR SHALL BE RESPONSIBLE FOR DETERMINING UTILITY LOCATIONS PRIOR TO BEGINNING OF CONSTRUCTION. THESE PLANS MAY NOT SHOW ALL UTILITIES OR THE CORRECT LOCATIONS.

Project P21182
MEADOW PARK RAMP

City of Springfield
PUBLIC WORKS / ENGINEERING
225 FIFTH STREET, SPRINGFIELD, OR 97477
PHONE (541) 726-3753 FAX (541) 726-3689
INTERNET www.springfield-or.gov

SPRINGFIELD OREGON

REGISTERED PROFESSIONAL ENGINEER
58377PE
Kristi Krueger P.E.
OREGON
JULY 15, 2003
KRISTI S. KRUEGER

Digitally signed by Kristi Krueger P.E.
DN: cn=Kristi Krueger P.E., o=City of Springfield, ou=Engineering, email=kkrueger@springfield-or.gov, c=US
Date: 2022.10.24 08:56:39 -07'00'

EXP DATE: 06-30-2023

CURB RAMP PAY LIMIT

SCALE: 1" = 4'	SHEET B01 OF 13
DRAWN BY: J. GRASSETH	
DESIGNED BY: K. KRUEGER	
CHECKED BY: J. PASCHALL	

October 18, 2022

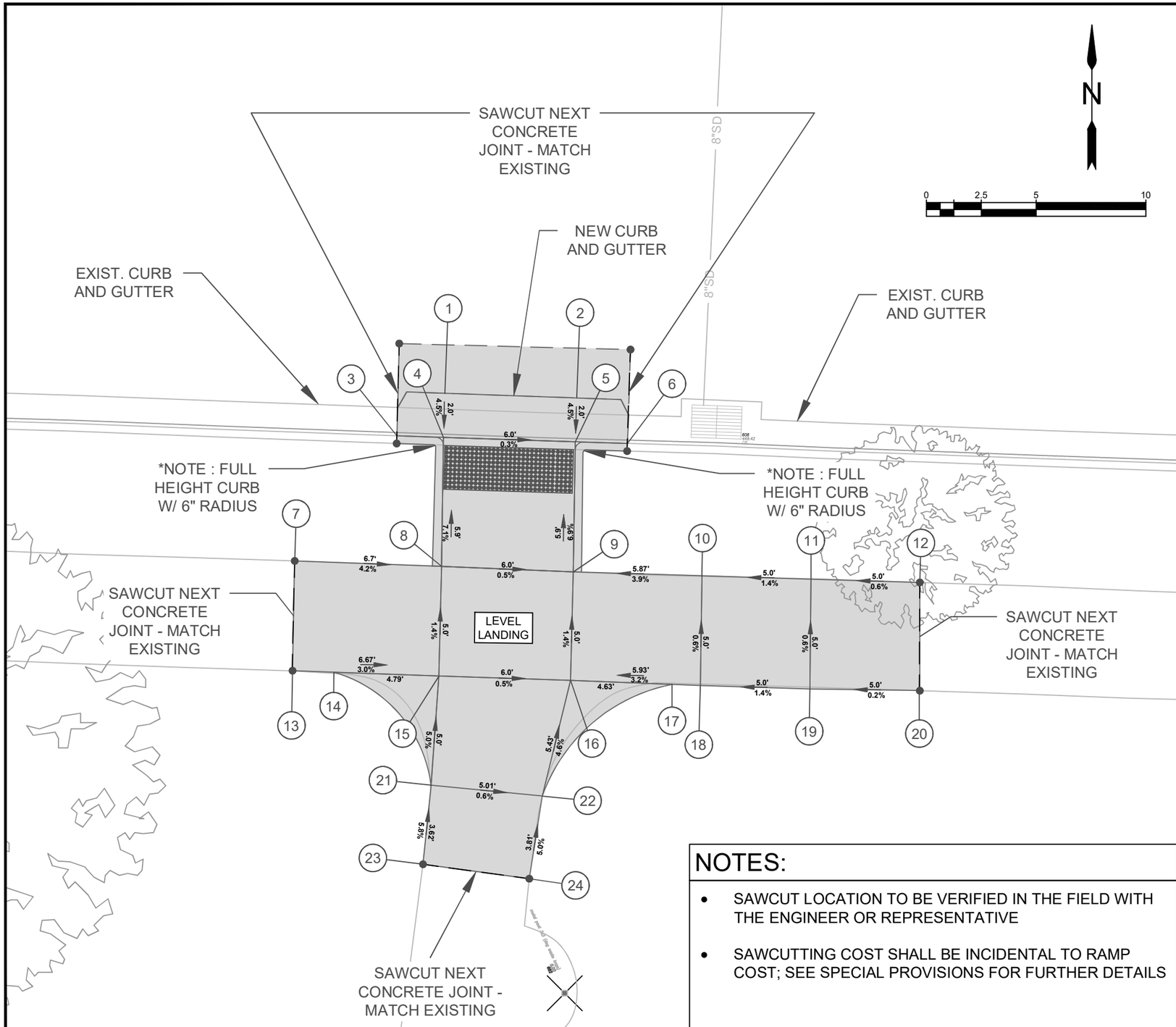

H ST AND MEADOW PARK

SOUTH SIDE

POINT TABLE

POINT #	ELEVATION (FT)	DESCRIPTION
1	449.57	GUTTER
2	449.55	GUTTER

POINT #	CFFL ELEVATION (FT)	TFC ELEVATION (FT)
3	449.48	449.96
4	449.48	449.98
5	449.46	449.96
6	449.43	449.91

POINT #	ELEVATION (FT)	DESCRIPTION
7	450.18	FSW
8	449.90	FSW/ LEVEL LANDING/ CURB
9	449.87	FSW/ LEVEL LANDING/ CURB
10	450.10	FSW
11	450.17	FSW
12	450.20	FSW
13	450.17	BSW
14	450.12	BSW/ WING
15	449.97	BSW/ LEVEL LANDING/ WING
16	449.94	BSW/ LEVEL LANDING/ WING
17	450.09	BSW/ WING
18	450.13	BSW
19	450.20	BSW
20	450.21	BSW
21	450.22	WING/ RAMP
22	450.19	WING/ RAMP
23	450.43	BACK OF RAMP
24	450.38	BACK OF RAMP

NOTES:

- SAWCUT LOCATION TO BE VERIFIED IN THE FIELD WITH THE ENGINEER OR REPRESENTATIVE
- SAWCUTTING COST SHALL BE INCIDENTAL TO RAMP COST; SEE SPECIAL PROVISIONS FOR FURTHER DETAILS

No.	Revision/Issue	Date

811 Know what's **below.** **Call** before you dig.

UTILITY LOCATIONS ARE APPROXIMATE. THE CONTRACTOR SHALL BE RESPONSIBLE FOR DETERMINING UTILITY LOCATIONS PRIOR TO BEGINNING OF CONSTRUCTION. THESE PLANS MAY NOT SHOW ALL UTILITIES OR THE CORRECT LOCATIONS.

Project P21182
MEADOW PARK RAMP

City of Springfield

PUBLIC WORKS / ENGINEERING
225 FIFTH STREET · SPRINGFIELD, OR 97477
PHONE (541) 726-3753 · FAX (541) 726-3689
INTERNET: www.springfield-or.gov

SPRINGFIELD OREGON

REGISTERED PROFESSIONAL ENGINEER
58377PE
Kristi Krueger P.E.
OREGON
JULY 15, 2003
KRISTI S. KRUEGER

EXP DATE: 06-30-2023

CURB RAMP DETAILS

SCALE: 1" = 5'

DRAWN BY: J. GRASSETH
DESIGNED BY: K. KRUEGER
CHECKED BY: J. PASCHALL

SHEET **B02** OF **13**

C:\Users\jgrasseth\City Of Springfield, OR\DPW-CMD-Engineering - Capital Projects\Projects Folders\TRAFFIC\P21182 Meadow Park Ramp\02-Design\Eng Tech Working Folder (OPTIONAL)\BA_BB_Curb Ramp Detail Sheets_.dwg

October 19, 2022

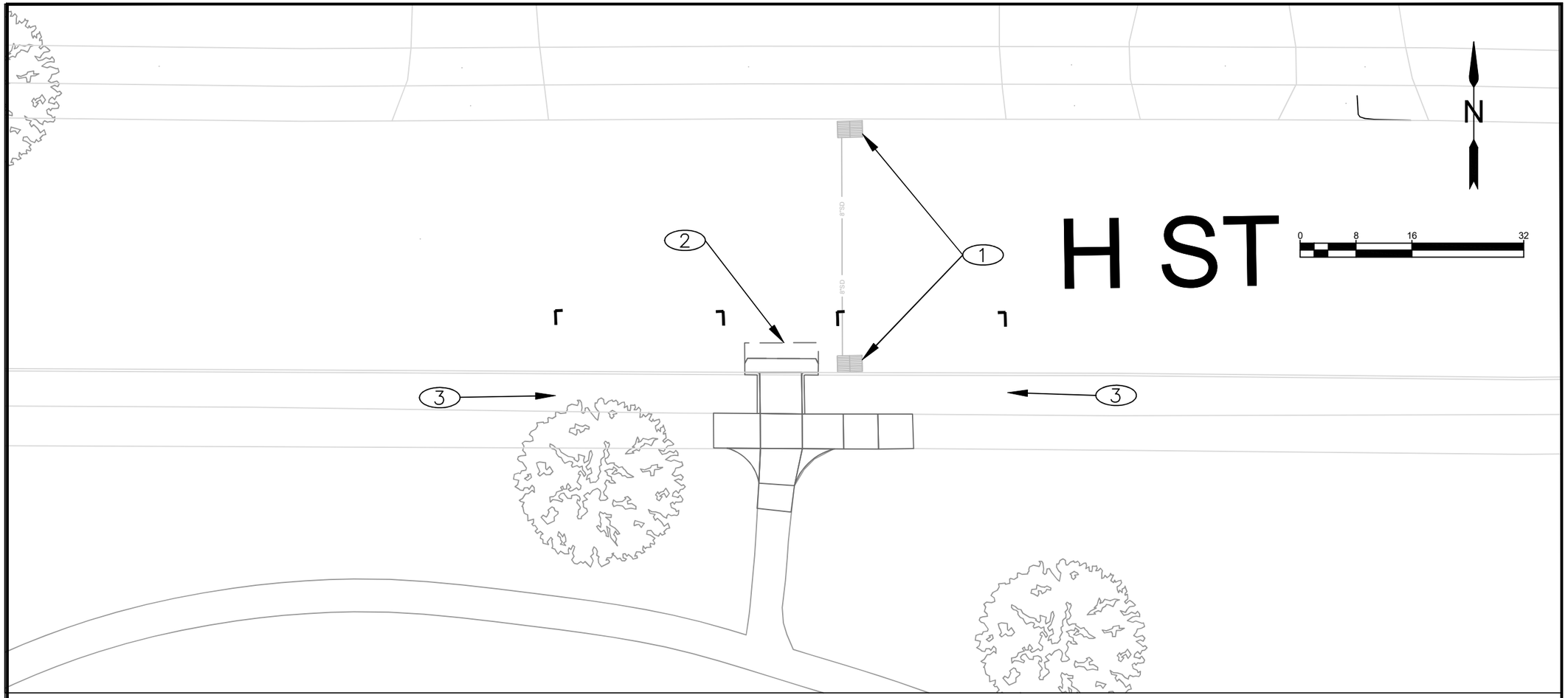

CONSTRUCTION NOTES:

1. INSTALL EROSION CONTROL DRAINAGE INLET PROTECTION TYPE 10– FOR DETAILS SEE F SHEETS
2. REMOVE AND REPLACE ADA CURB RAMP, SIDEWALK, & CURB & GUTTER AS REQUIRED – FOR DETAILS SEE B01–B02
3. INSTALL SIGN SUPPORTS. VERIFY LOCATIONS WITH ENGINEER IN–FIELD – FOR DETAILS SEE L01 SHEET

No.	Revision/Issue	Date

Know what's **below.**
Call before you dig.

UTILITY LOCATIONS ARE APPROXIMATE. THE CONTRACTOR SHALL BE RESPONSIBLE FOR DETERMINING UTILITY LOCATIONS PRIOR TO BEGINNING OF CONSTRUCTION. THESE PLANS MAY NOT SHOW ALL UTILITIES OR THE CORRECT LOCATIONS.

Project P21182
MEADOW PARK RAMP

City of Springfield
PUBLIC WORKS / ENGINEERING
225 FIFTH STREET, SPRINGFIELD, OR 97477
PHONE: (541) 726-3753 FAX (541) 726-3689
INTERNET www.springfield-or.gov

REGISTERED PROFESSIONAL ENGINEER
58377PE
Kristi Krueger P.E.
OREGON
JULY 15, 2003
KRISTI S. KRUEGER

Digitally signed by Kristi Krueger P.E.
DN: cn=Kristi Krueger P.E., o=City of Springfield, ou=Engineering, email=kkrueger@springfield-or.gov, c=US
Date: 2022.10.24 08:58:26 -07'00'

EXP DATE: 06-30-2023

GEN CONSTRUCTION DETAILS

SCALE: 1" = 16'	SHEET C01 OF 13
DRAWN BY: J. GRASSETH	
DESIGNED BY: K. KRUEGER	
CHECKED BY: J. PASCHALL	

October 18, 2022

GENERAL NOTES:

1. PRIOR TO ANY WORK, TRAFFIC CONTROL SIGNS AND DEVICES SHALL BE IN PLACE AND APPROVED BY THE ENGINEER.
2. MAINTAIN 10 FT MINIMUM TRAVEL LANE WIDTH.
3. USE FLUORESCENT ORANGE SHEETING FOR THE BACKGROUND OF ALL TEMPORARY WARNING SIGNS.
4. WHEN NECESSARY, SIGN SPACING ADJUSTMENTS TO 30% OF THE "A" DIMENSION FOR ALL SPEEDS.
5. SIGNING AND OTHER TCD SHOWN TO BE INSTALLED IN CONJUNCTION WITH THE WORK AREAS, SHALL MOVE WITH THE WORK AREAS.
6. TO DETERMINE TAPER LENGTH "L" AND "BUFFER" LENGTH SHOWN ON EACH TRAFFIC CONTROL PLAN, USE "THE MINIMUM LENGTHS TABLE".
7. TO DETERMINE SIGN SPACING A, B AND C, USE "TRAFFIC CONTROL DEVICES (TCD) SPACING TABLE".
8. CHANNELIZATION DEVICES MAY BE PLACED AT 10' SPACING AROUND THE WORK AREA FOR EMPHASIS IF THE AREA IS EXPOSED TO TRAFFIC BOTH SIDES SIMULTANEOUSLY.
9. DO NOT LOCATE SIGNS IN LOCATIONS DESIGNATED FOR BICYCLE OR PEDESTRIAN TRAFFIC.
10. INSTALL A "BICYCLES ON ROADWAY" (CW11-1) SIGN IN ADVANCE OF THE CLOSURE WHEN A BIKE LANE IS CLOSED, OR WHEN THE SHOULDER IS CLOSED AND BIKES ARE EXPECTED.
11. SEE STANDARD DRAWING TM844 FOR PEDESTRIAN TRAFFIC CONTROL DURING RAMP RECONSTRUCTION AND FOR MISCELLANEOUS TRAFFIC CONTROL APPLICATIONS.

SYMBOL LEGEND

- TEMPORARY SIGN
- WORK ZONE
- TYPE III BARRICADE
- DIRECTION OF TRAVEL
- CONE OR TUBULAR MARKER
- LONGITUDINAL CHANNELIZATION DEVICE

No.	Revision / Issue	Date

811 Know what's below. Call before you dig.

UTILITY LOCATIONS ARE APPROXIMATE. THE CONTRACTOR SHALL BE RESPONSIBLE FOR DETERMINING UTILITY LOCATIONS PRIOR TO BEGINNING OF CONSTRUCTION. THESE PLANS MAY NOT SHOW ALL UTILITIES OR THE CORRECT LOCATIONS.

Project P21182
MEADOW PARK RAMP

City of Springfield
SPRINGFIELD OREGON
PUBLIC WORKS / ENGINEERING
225 FIFTH STREET SPRINGFIELD, OR 97477
PHONE (541) 726-4600 FAX (541) 726-3689
INTERNET www.springfield-or.gov

REGISTERED PROFESSIONAL ENGINEER
74462PE
OREGON
SEPT. 13, 2011
MICHAEL T. LIEBLER

EXP DATE: 12-31-2022

TEMPORARY TRAFFIC CONTROL DETAIL

NO SCALE

DRAWN BY: J. GRASSETH
DESIGNED BY: J. GRASSETH
CHECKED BY: B. BARNETT

SHEET E01 OF 13

October 18, 2022

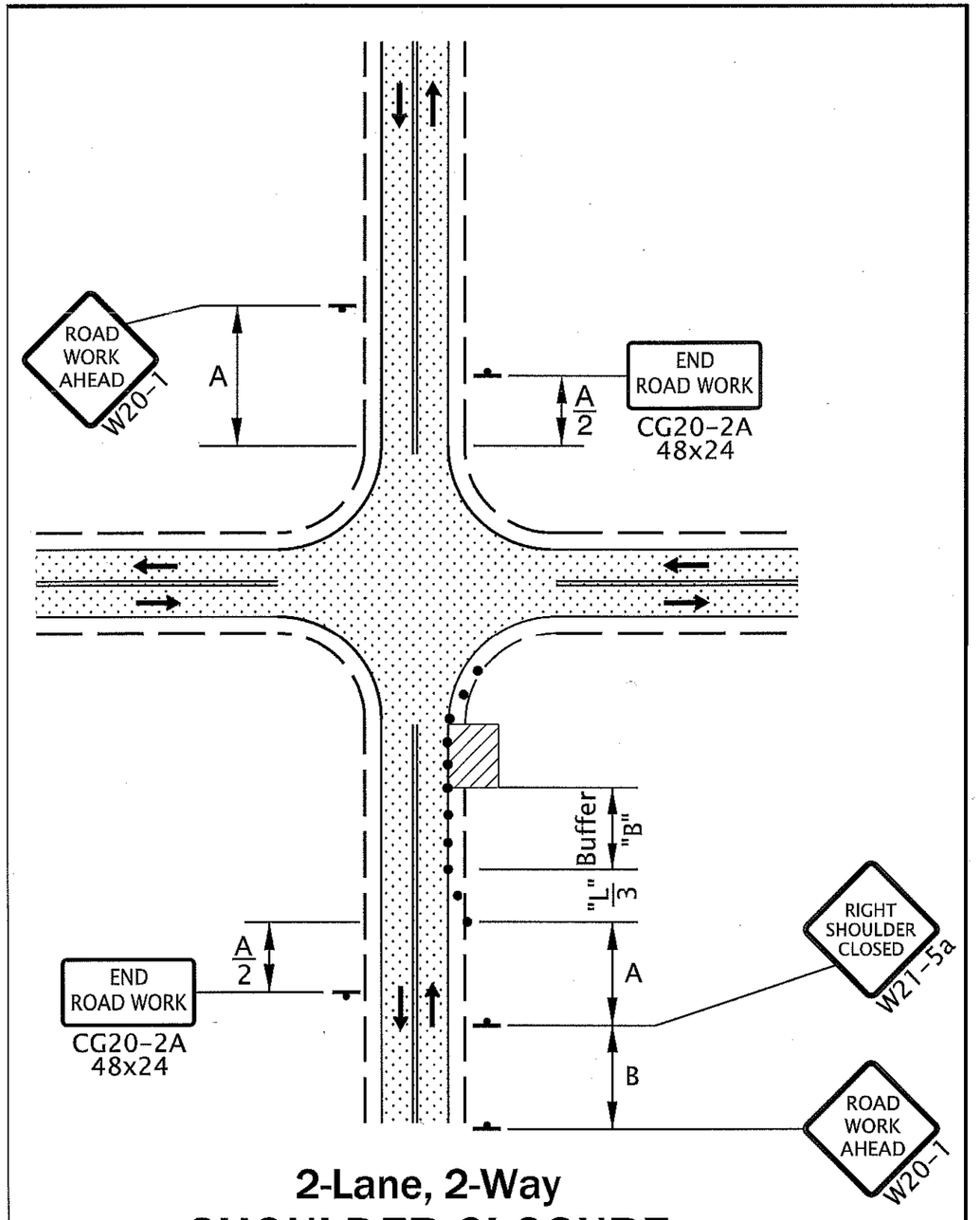

2-Lane, 2-Way
SHOULDER CLOSURE

No.	Revision/Issue	Date

Know what's **below.**
Call before you dig.

UTILITY LOCATIONS ARE APPROXIMATE. THE CONTRACTOR SHALL BE RESPONSIBLE FOR DETERMINING UTILITY LOCATIONS PRIOR TO BEGINNING OF CONSTRUCTION. THESE PLANS MAY NOT SHOW ALL UTILITIES OR THE CORRECT LOCATIONS.

Project P21182
MEADOW PARK RAMP

City of Springfield

PUBLIC WORKS / ENGINEERING
225 FIFTH STREET, SPRINGFIELD, OR 97477
PHONE: (541) 726-3753 FAX: (541) 726-3689
INTERNET: www.springfield-or.gov

SPRINGFIELD OREGON

REGISTERED PROFESSIONAL ENGINEER
74462PE
OREGON
SEPT. 13, 2011
MICHAEL T. LIEBLER

EXP DATE: 12-31-2022

TEMPORARY TRAFFIC CONTROL DETAIL

NO SCALE

DRAWN BY: J. GRASSETH
DESIGNED BY: J. GRASSETH
CHECKED BY: B. BARNETT

SHEET **E02** OF **13**

October 18, 2022

C:\Users\jgrasseth\City Of Springfield, OR\DPW-CMD-Engineering - Capital Projects\Projects Folders\TRAFFIC\P21182 Meadow Park Ramp\02-Design\Eng Tech Working Folder (OPTIONAL)\E_Temp Traffic Control_.dwg

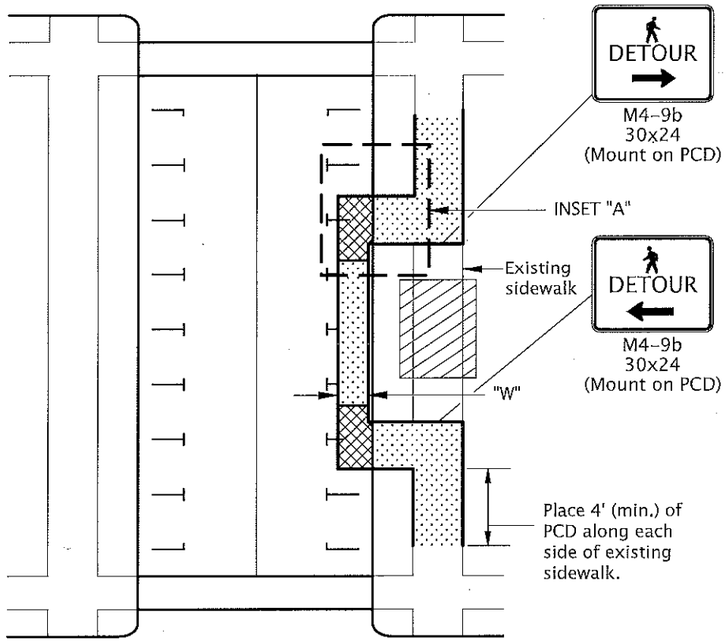

Within Roadway
SIDEWALK DIVERSION

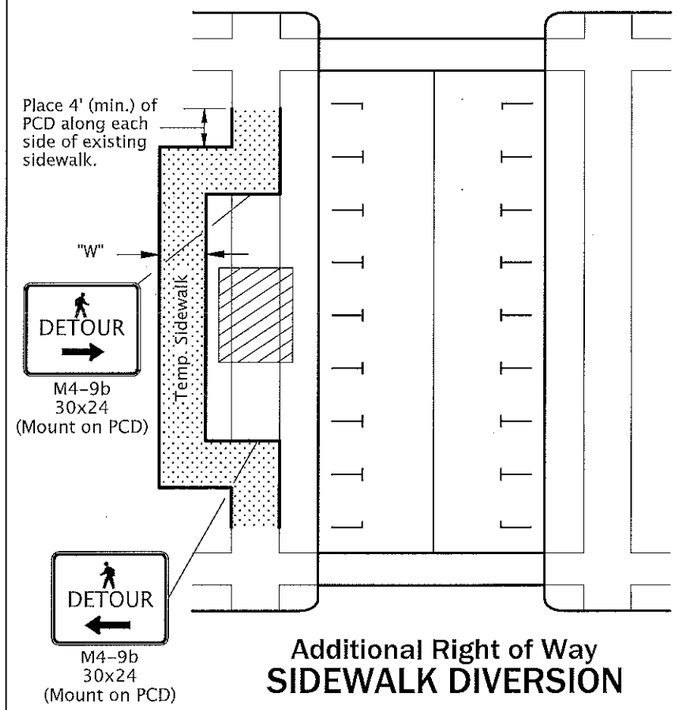

Additional Right of Way
SIDEWALK DIVERSION

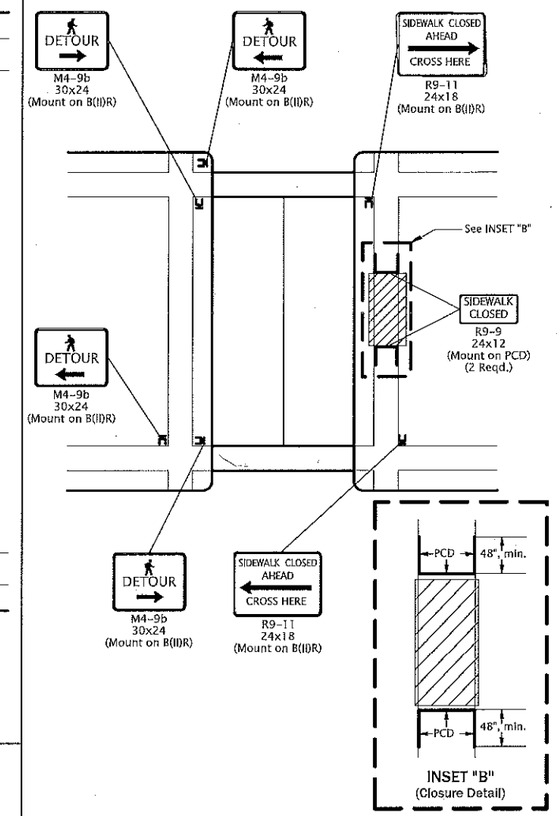

SIDEWALK CLOSURE, MIDBLOCK

NOTES:

- Ramp size will vary. Ramp must meet ADA requirements incl. max. finished surf. slope of 8.3% and max. finished cross slope of 2.0%.

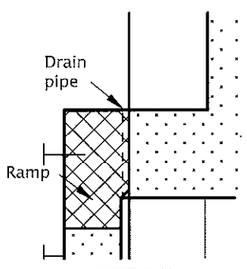

INSET "A"
(Temp. Sidewalk Ramp)

NOTES:

- Place or construct temp. sidewalk ramp, as needed.
- For roadways with a pre-construction posted speed of 40 mph or less.
- See inset "A" for Temp. Sidewalk Ramp details.
- "W" = 60", or, where 60" width cannot be maintained through the entire route, provide 48" min. width with 60" x 60" passing spaces every 200 ft.
- Use temporary ADA compliant surfaces to cross planter strips or other non-traversable surfaces.

GENERAL NOTES FOR ALL DETAILS:

- When closing or relocating crosswalks or other pedestrian facilities provide ADA compliant facilities. Include accessibility features consistent with existing pedestrian facilities by providing adequate slope transitions and surfacing.
- Provide non-slip, 60 inch minimum wide surface through entire pedestrian route. If not possible, provide 48" min. width with 60" x 60" passing spaces every 200 feet along the route.
- Only TCD for pedestrians are shown. Other devices may be necessary to control vehicular traffic.
- Stage work, as necessary, to provide a temporary pedestrian access route at all times. For roadways with no available detours, maintain one open sidewalk at all times.
- Minimize pedestrian out-of-direction travel.
- To be accompanied by Dwg. Nos. TM820 & TM821.

UNDER PEDESTRIAN TRAFFIC
UNDER CONSTRUCTION
PEDESTRIAN CANALIZING DEVICE (PCD)

DIAGRAM - SIDEWALK CLOSURE CORNER
(REF, SEE ODOT STD DWG TM844)

No.	Revision/Issue	Date

811
Know what's **below.**
Call before you dig.

UTILITY LOCATIONS ARE APPROXIMATE. THE CONTRACTOR SHALL BE RESPONSIBLE FOR DETERMINING UTILITY LOCATIONS PRIOR TO BEGINNING OF CONSTRUCTION. THESE PLANS MAY NOT SHOW ALL UTILITIES OR THE CORRECT LOCATIONS.

Project P21182
MEADOW PARK RAMP

City of Springfield

PUBLIC WORKS / ENGINEERING
225 FIFTH STREET, SPRINGFIELD, OR 97477
PHONE: (541) 726-3753 FAX: (541) 726-3689
INTERNET: www.springfield-or.gov

SPRINGFIELD OREGON

REGISTERED PROFESSIONAL ENGINEER
74462PE
OREGON
SEPT. 13, 2011
MICHAEL T. LIEBLER

EXP DATE: 12-31-2022

TEMPORARY TRAFFIC CONTROL DETAIL

NO SCALE	SHEET E03 OF 13
DRAWN BY: J. GRASSETH	
DESIGNED BY: J. GRASSETH	
CHECKED BY: B. BARNETT	

October 18, 2022

C:\Users\jgrasseth\City Of Springfield, OR\DPW-CMD-Engineering - Capital Projects\Projects Folders\TRAFFIC\P21182 Meadow Park Ramp\02-Design\Eng Tech Working Folder (OPTIONAL)\E_ Temp Traffic Control_ .dwg

NOTES:

1. PLACE INLET/CATCH BASIN PROTECTION AT EXISTING FIXTURES (SEE DETAILS ON SHEET F02.)

GENERAL NOTES:

1. CONCRETE WASHOUTS ARE NOT PROVIDED ON THIS PROJECT
2. SAW CUTTING SLURRY IS TO BE VACUMED
3. ANY AREAS OF EXPOSED SOILS. INCLUDING ROADWAY EMBANKMENTS, THAT WILL NOT BE DISTURBED FOR TWO DAYS DURING THE WET SEASON (OCTOBER 1 TO APRIL 30) OR SEVEN DAYS DURING THE DRY SEASON (MAY 1 TO SEPTEMBER 30) SHALL BE IMMEDIATELY STABILIZED WITH AN APPROVED ESC METHOD (SEEDING & MULCHING WITH STRAW, BARK, COMPOST, OR PLASTIC COVERING, ETC.).

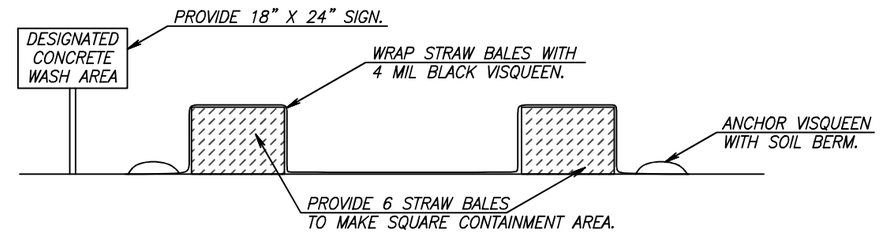

1 / F01 CONCRETE WASH AREA DETAIL

NOT TO SCALE

EROSION CONTROL STANDARD NOTES:

A. Approval of this Erosion and Sedimentation Control Plan (ESCP) does not constitute an approval of permanent road or drainage design (e.g., size and location of roads, pipes, restrictors, channels, retention facilities, utilities, etc.).

B. Approval of this ESCP does not relieve the permit holder and or the contractor from all other permitting requirements. Prior to beginning construction activities, all other necessary approvals shall be obtained.

C. An inspection of the erosion control measures by City LDAP staff is required prior to any ground disturbance on the site.

D. The erosion and sediment control measures shown on the plan are the minimum requirements for anticipated site conditions. During the construction period, these measures shall be upgraded as needed for unexpected storm events and to ensure that sediment and sediment-laden water does not leave the site.

E. The implementation of the ESCP and the construction, maintenance, replacement, and upgrading of the erosion and sediment control measures is the responsibility of the permit holder and or the contractor until all construction is completed and accepted by the City and vegetation/landscaping is established per the required warranty period.

F. In the event the ESC facilities identified on the ESCP are not functioning properly, the contractor is responsible for immediately implementing changes to the ESCP as directed by the ESCP engineer or his inspector. The engineer, his inspector or the City may stop all construction activity on site until the erosion problem is corrected and all ESC facilities are functioning properly. If the contractor does not immediately implement changes to the ESCP identified by the ESCP engineer or his inspector, the City may implement the necessary changes and require payment from the contractor prior to project acceptance by the City.

G. The boundaries of the clearing limits shown on this plan shall be clearly flagged in the field by the engineer prior to construction. During the construction period, no disturbance beyond the flagged clearing limits shall be permitted. The flagging shall be maintained by the permit holder and or the contractor for the duration of construction.

H. The erosion and sediment control measures on active sites shall be inspected and maintained daily and within the 24 hours after any storm event of greater than 0.5 inches of rain per 24 hour period. Measures shall be inspected by the permit holder and or the contractor after each rainfall and at least daily during prolonged rainfall. Any required repairs or adjustments shall be made immediately. The erosion and sediment control measures on inactive sites shall be inspected a minimum of once every two (2) weeks or within 48 hours following a storm event. Written records shall be kept of weekly reviews of the ESC facilities during the wet season (October 1 to April 30) and of monthly reviews during the dry season (May1 to September 30).

I. All erosion and sediment control measures shall be protected from damage at all times. Control measures shall remain in place until permanent or temporary re-vegetation has been stabilized. Any measure that is damaged or destroyed shall be repaired or replaced immediately.

J. Any areas of exposed soils, including roadway embankments, that will not be disturbed for two days during the wet season (October 1 to April 30) or seven days during the dry season (May 1 to September 30) shall be immediately stabilized with an approved ESC method (seeding & mulching with straw, bark, compost, or plastic covering, etc.).

K. A supply of materials necessary to meet compliance and implement the LDAP or other best management erosion practices under all weather conditions shall be maintained at all times on the construction site.

L. No hazardous substances, such as paints, thinners, fuels and other chemicals shall be released onto the site, adjacent properties, or into water features, the City's storm water system, or related natural resources.

M. Street sweeping shall be performed as needed or when directed by the City inspector to ensure public right-of-ways are kept clean and free of debris. Street flushing is prohibited.

N. When trucking saturated soils from the site, either water-tight trucks shall be used or loads shall be drained on site until dripping has been reduced to no more than one gallon per hour. Sediment laden water will not be allowed to enter the storm water system

O. Extracted ground water from excavated trenches shall be disposed of in a suitable manner without damage to adjacent property, public storm water system, water features, and related natural resources. Approval of a dewatering system does not guarantee that it will meet compliance or be acceptable for use in all situations. Modifications to the dewatering system will be required if compliance can not be met. At no time will sediment laden water be allowed to leave the construction site.

P. At no time shall more than one foot of sediment be allowed to accumulate within a catch basin. All catch basins and conveyance lines shall be cleaned prior to paving. The cleaning operation shall not flush sediment laden water into the downstream system.

Q. Any required stabilized construction entrances and roads shall be installed at the beginning of construction and maintained for the duration of the project. Additional measures, such as wash pads, may be required to ensure that all paved areas are kept clean for the duration of the project.

R. Any permanent flow control facility used as a temporary settling basin shall be modified with the necessary erosion control measures and shall provide adequate storage capacity.

S. Where straw mulch for temporary erosion control is required, it shall be applied at a minimum thickness of two to three inches.

T. In preparation of the wet season, all disturbed areas shall be reviewed to identify which ones can be seeded in preparation for the winter rains. A sketch map of those areas to be seeded and those areas to remain uncovered shall be submitted to the City by September 15. The City can require seeding of additional areas in order to protect surface waters, adjacent properties, or drainage facilities. Disturbed areas identified for seeding shall be seeded prior to the beginning of the wet season (October 1).

No.	Revision/Issue	Date

811 Know what's below. Call before you dig.

UTILITY LOCATIONS ARE APPROXIMATE. THE CONTRACTOR SHALL BE RESPONSIBLE FOR DETERMINING UTILITY LOCATIONS PRIOR TO BEGINNING OF CONSTRUCTION. THESE PLANS MAY NOT SHOW ALL UTILITIES OR THE CORRECT LOCATIONS.

Project P21182
MEADOW PARK RAMP

City of Springfield

PUBLIC WORKS / ENGINEERING
225 FIFTH STREET, SPRINGFIELD, OR 97477
PHONE (541) 726-3753 FAX (541) 726-3689
INTERNET www.springfield-or.gov

SPRINGFIELD OREGON

REGISTERED PROFESSIONAL ENGINEER 58377PE OREGON JULY 15, 2003 KRISTI S. KRUEGER

Kristi Krueger P.E.

Digitally signed by Kristi Krueger P.E.
DN: cn=Kristi Krueger P.E., o=City of Springfield, ou=Engineering, email=kkrueger@springfield-or.gov, c=US
Date: 2022.10.24 08:59:01 -07'00'

EXP DATE: 06-30-2023

EROSION AND SEDIMENT CONTROL DETAILS

NO SCALE

DRAWN BY:	J. GRASSETH
DESIGNED BY:	K. KRUEGER
CHECKED BY:	J. PASCHALL

SHEET F01 OF 13

October 18, 2022

C:\Users\jgrasseth\City Of Springfield, OR\DPW-CMD-Engineering - Capital Projects\Projects Folders\TRAFFIC\P21182 Meadow Park Ramp\02-Design\Eng Tech Working Folder (OPTIONAL)\F-Erosion Control_.dwg

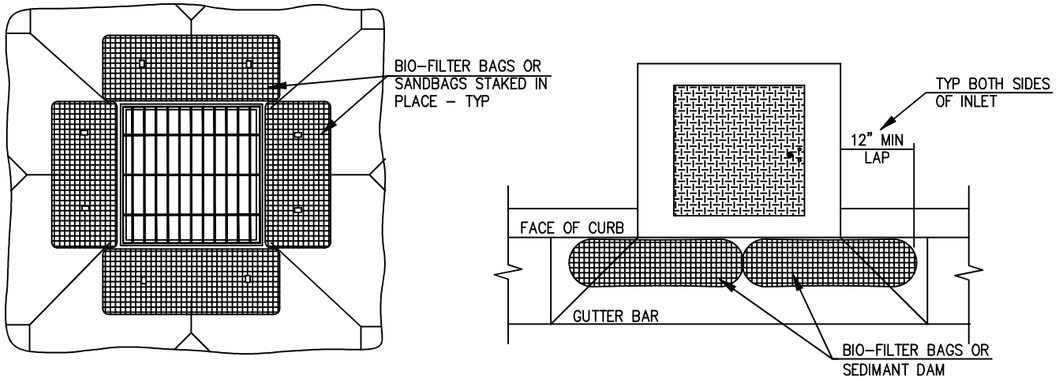

NOTES
1. PRIOR TO 1st PAVEMENT LIFT, REMOVE BIO-BAG/SANDBAG BARRIERS AND INSTALL BASIN INSERT BAG OR CURB INLET SEDIMENT DAM AT ALL INLET STRUCTURES.

1 / F02 DRAINAGE INLET STRUCTURE PROTECTION

NOT TO SCALE

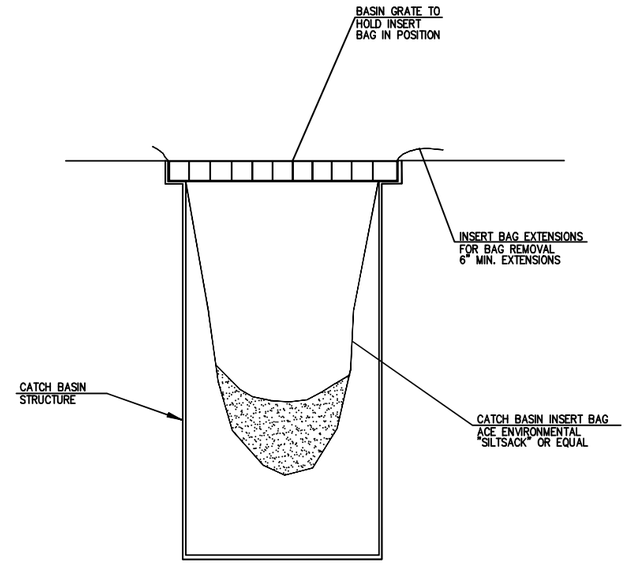

2 / F02 CATCH BASIN INSERT BAG

NOT TO SCALE

INLET PROTECTION

Notes:

1. Length:
   50' min. - for less than 1 acre exposed soil
   100' min. - for greater than 1 acre exposed soil
2. Width:
   20' - or width of extg. approach, whichever is greater.
3. Depth: 8" min

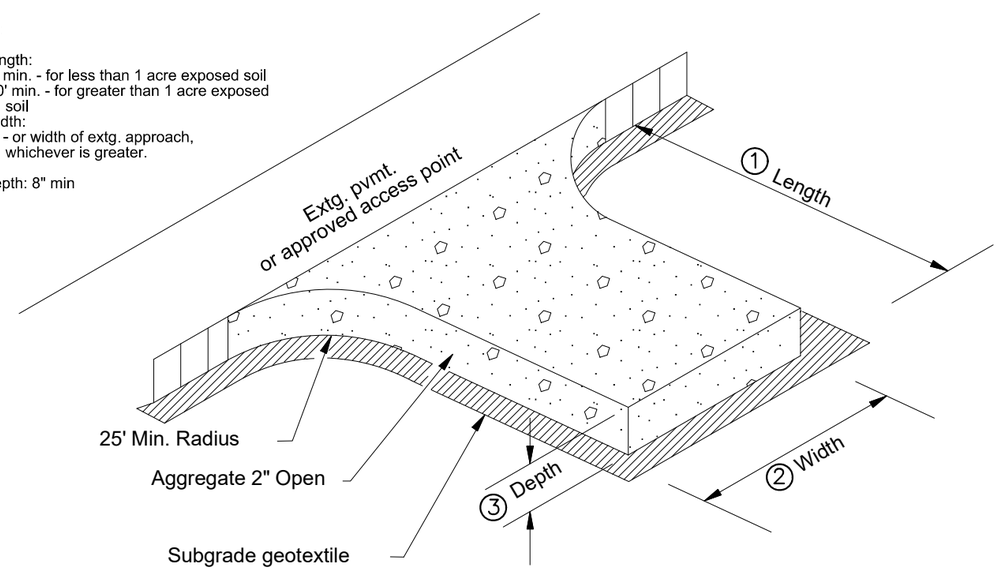

3 / F02 CONSTRUCTION ENTRANCE

NOT TO SCALE

No.	Revision/Issue	Date

811 Know what's **below.** **Call** before you dig.

UTILITY LOCATIONS ARE APPROXIMATE. THE CONTRACTOR SHALL BE RESPONSIBLE FOR DETERMINING UTILITY LOCATIONS PRIOR TO BEGINNING OF CONSTRUCTION. THESE PLANS MAY NOT SHOW ALL UTILITIES OR THE CORRECT LOCATIONS.

Project P21182
MEADOW PARK RAMP

City of Springfield

PUBLIC WORKS / ENGINEERING
225 FIFTH STREET, SPRINGFIELD, OR 97477
PHONE (541) 726-3753 FAX (541) 726-3689
INTERNET www.springfield-or.gov

SPRINGFIELD OREGON

REGISTERED PROFESSIONAL ENGINEER
58377PE
Kristi Krueger P.E.
OREGON
JULY 15, 2003
KRISTI S. KRUEGER

EXP DATE: 06-30-2023

EROSION AND SEDIMENT CONTROL DETAILS

NO SCALE

DRAWN BY:	J. GRASSETH
DESIGNED BY:	K. KRUEGER
CHECKED BY:	J. PASCHALL

SHEET F02 OF 13

October 18, 2022

C:\Users\jgrasseth\City Of Springfield, OR\DPW-CMD-Engineering - Capital Projects\Projects Folders\TRAFFIC\P21182 Meadow Park Ramp\02-Design\Eng Tech Working Folder (OPTIONAL)\F-Erosion Control_.dwg

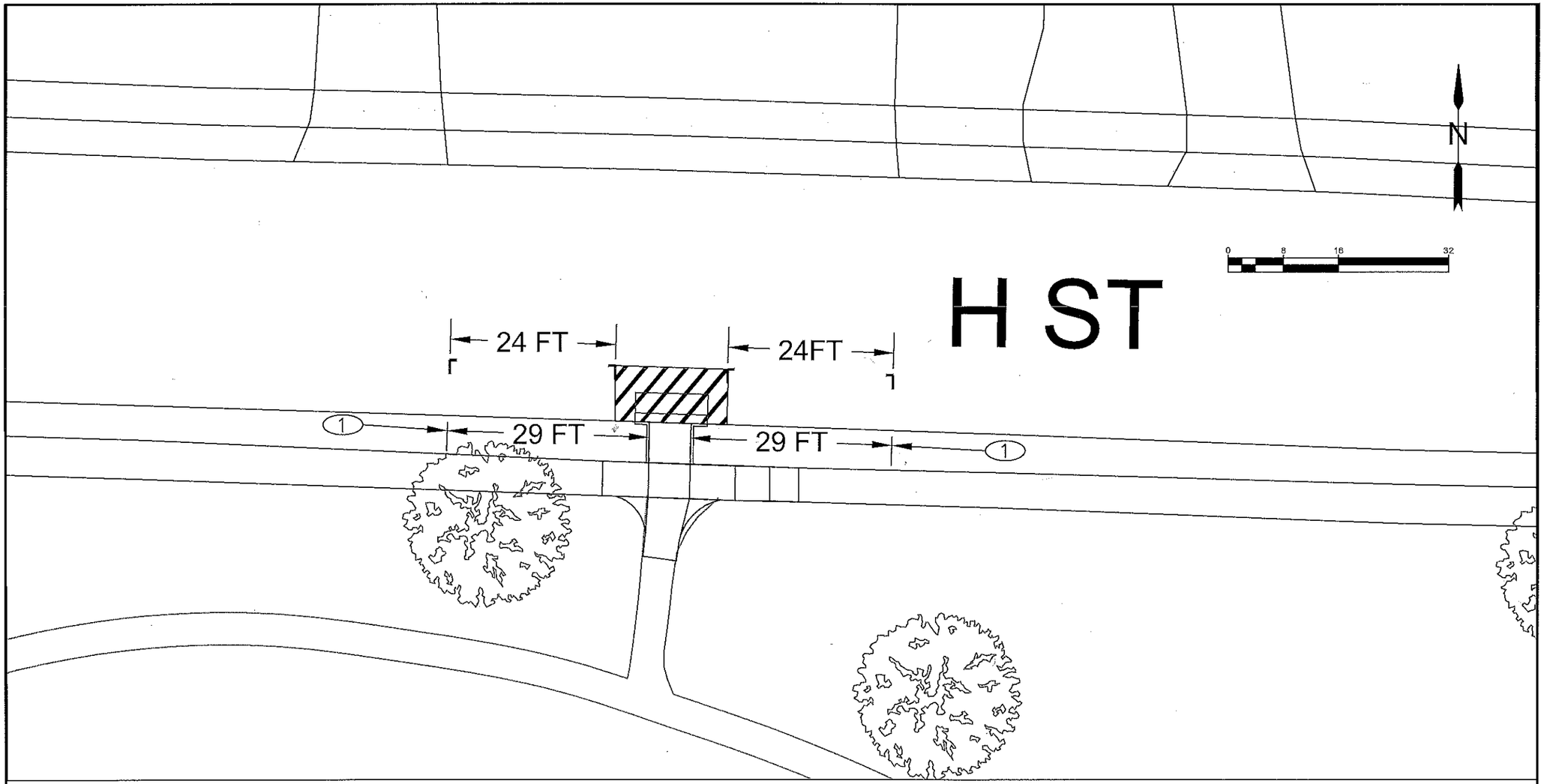

INSTALLATION NOTES:

(1) INSTALL SIGN SUPPORTS. VERIFY LOCATIONS WITH ENGINEER IN–FIELD AND SEE SD DWG 5–18

NOTES:

- Pavement markings for 24' parking spots will be done by City of Springfield Operations Department at a later date.
- Parking signs will be installed by City of Springfield Operations Department at a later date.

No.	Revision Details	Date

811 Know what's below. Call before you dig.

UTILITY LOCATIONS ARE APPROXIMATE. THE CONTRACTOR SHALL BE RESPONSIBLE FOR DETERMINING UTILITY LOCATIONS PRIOR TO BEGINNING OF CONSTRUCTION. THESE PLANS MAY NOT SHOW ALL UTILITIES OR THE CORRECT LOCATIONS.

Project P21182
MEADOW PARK RAMP

City of Springfield
PUBLIC WORKS / ENGINEERING
225 FIFTH STREET, SPRINGFIELD, OR 97477
PHONE (541) 726-3753 FAX (541) 726-3689
INTERNET www.springfield-or.gov

SPRINGFIELD OREGON

REGISTERED PROFESSIONAL ENGINEER
74462PE
OREGON
SEPT. 13, 2011
MICHAEL T. LIEBLER

EXP DATE: 12-31-2022

SIGNING PLAN

SCALE: 1" = 16'

DRAWN BY: J. GRASSETH
DESIGNED BY: J. GRASSETH
CHECKED BY: B. BARNETT

SHEET L01 OF 13

October 18, 2022

DO NOT USE THIS DETAIL FOR STANDARD CURB REMOVAL
REFER TO STANDARD DRAWING 3-7

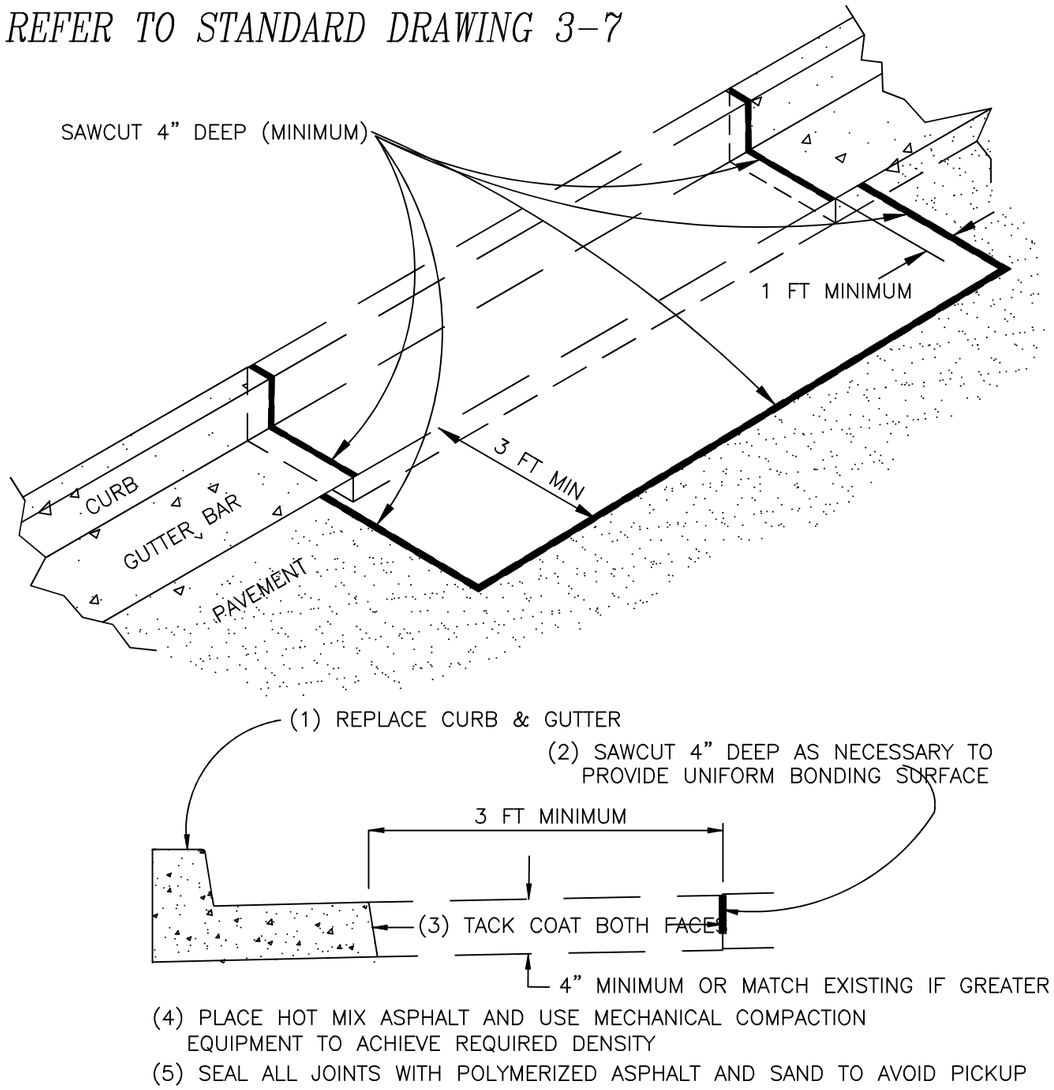

NOTES

* EXISTING GUTTER BAR SHALL NOT BE REMOVED WITHOUT PRIOR APPROVAL BY THE CITY
* CURB CUT WIDTH SHALL BE IN ACCORDANCE WITH PERMIT
* REFER TO SPRINGFIELD STANDARD SPECIFICATIONS FOR ROADWAY STRUCTURE COMPACTION REQUIREMENTS
* SIDEWALKS, ACCESS RAMPS, AND RESIDENTIAL DRIVEWAYS SHALL BE 3000 PSI FIELD STRENGTH (3450 PSI LAB STRENGTH) 6.0 SACK MIX CONCRETE
* CURBS & COMMERCIAL DRIVEWAYS SHALL BE 3500 PSI FIELD STRENGTH (4025 PSI LAB STRENGTH) 6.3 SACK MIX CONCRETE

NO	REVISION	DATE	BY	APPR.

CITY OF SPRINGFIELD
SPRINGFIELD
DEPT. OF PUBLIC WORKS

CURB & GUTTER
REMOVAL & REPLACEMENT

Al Peroutka City Engineer 2003

STANDARD DRAWING
3-8
2003

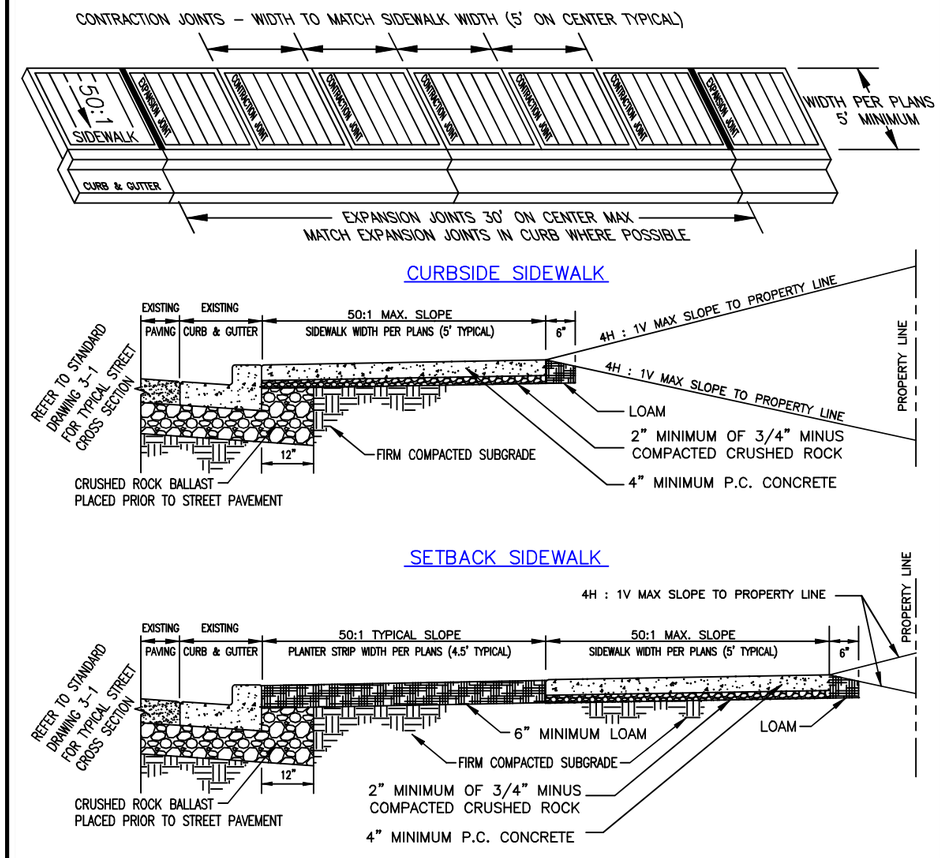

NOTES

* NO ABOVEGROUND FACILITIES (FIRE HYDRANTS, POWER POLES, CATCH BASINS, VALVES, J-BOXES, ETC.) SHALL BE PERMITTED WITHIN THE SIDEWALK AREA
* ALL SURFACES SHALL HAVE A BROOM FINISH.
* SIDEWALKS, ACCESS RAMPS, AND RESIDENTIAL DRIVEWAYS SHALL BE 3000 PSI FIELD STRENGTH (3450 PSI LAB STRENGTH) 6.0 SACK MIX CONCRETE
* CURBS & COMMERCIAL DRIVEWAYS SHALL BE 3500 PSI FIELD STRENGTH (4025 PSI LAB STRENGTH) 6.3 SACK MIX CONCRETE

NO	REVISION	DATE	BY	APPR.

CITY OF SPRINGFIELD
SPRINGFIELD
DEPT. OF PUBLIC WORKS

SIDEWALK CONSTRUCTION

Al Peroutka City Engineer 2003

STANDARD DRAWING
3-12
2003

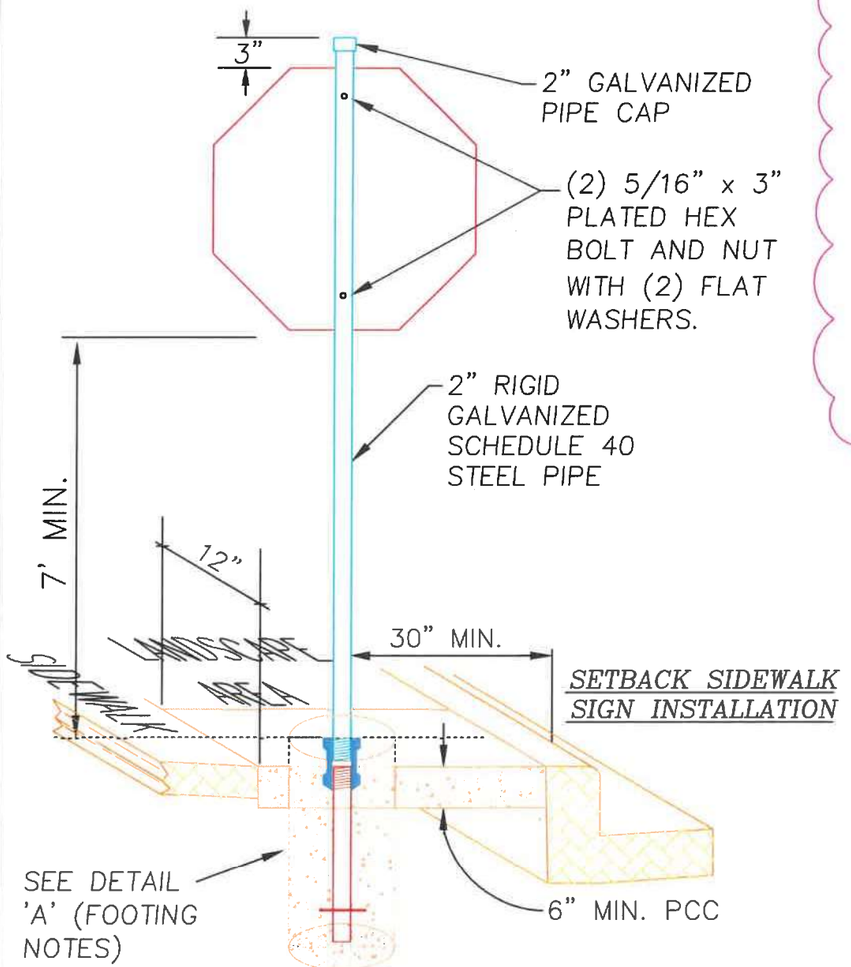

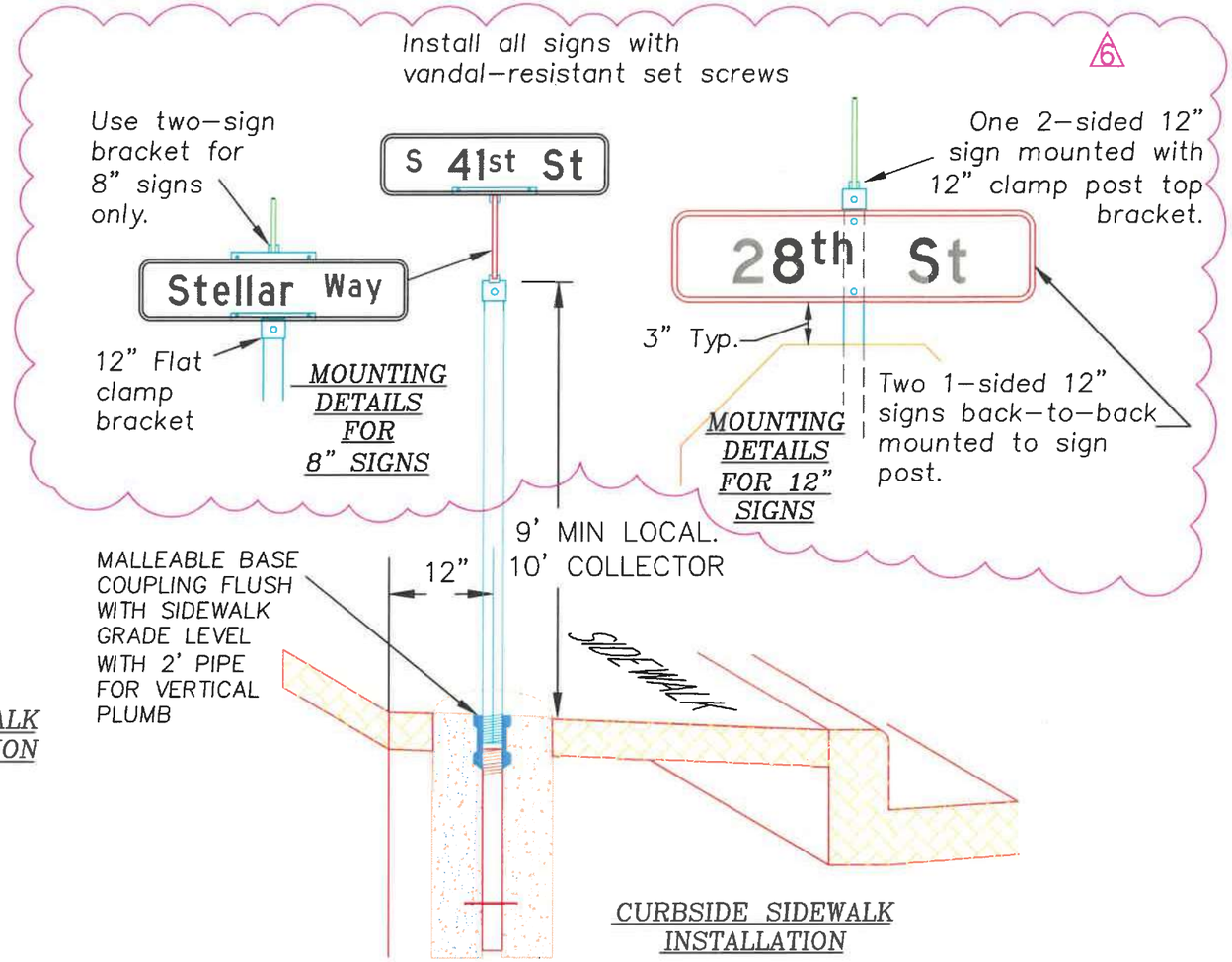

DETAIL 'A'
FOOTING INSTALLATION NOTES

1. INSTALL 2" SCHEDULE 40 RIGID GALVANIZED STEEL PIPE.
2. INSTALL 2" THREADED, GALVANIZED, MALLEABLE IRON PIPE COUPLING, (CLASS 150) WITH TOP SET FLUSH AT FINISHED GRADE.
3. INSTALL 2" RIGID GALVANIZED STEEL PIPE TACK WELDED TO COUPLING TO PREVENT TURNING.
4. INSTALL 1/4" X 8" STEEL PIN (Spike) THROUGH STEEL PIPE
5. INSTALL SIGN BASE ASSEMBLY IN CLASS 3300 PORTLAND CONCRETE USING 2' MIN. GUIDE ROD TO INSURE SIGN POST WILL BE VERTICAL.

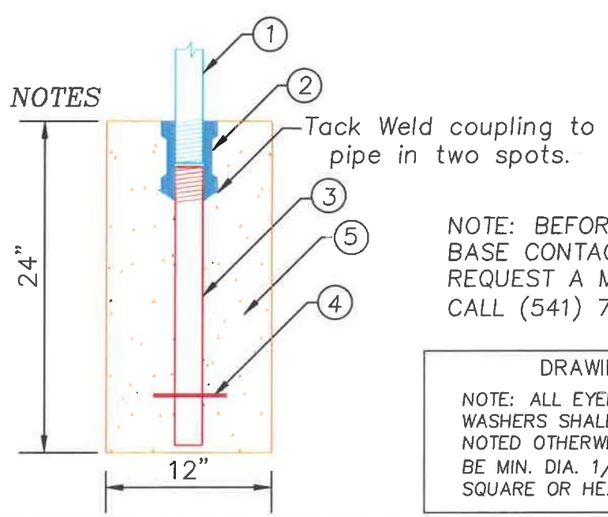

NOTE: BEFORE INSTALLING A SIGN BASE CONTACT CITY TRAFFIC TO REQUEST A MARKED SIGN LOCATION. CALL (541) 726-3753

DRAWING NOT TO SCALE

NOTE: ALL EYEBOLTS, BOLTS, NUTS, AND WASHERS SHALL BE GALV. STEEL UNLESS NOTED OTHERWISE, ALL SET SCREWS SHALL BE MIN. DIA. 1/4" STAINLESS STEEL WITH SQUARE OR HEX HEADS.

No.	Revision/Issue	Date	By
6	12" brackets, flat stock	4/21	CH

STANDARD DRAWING
TSD5_18

ROADSIDE SIGN INSTALLATION DETAIL

City of Springfield

SPRINGFIELD OREGON

REGISTERED PROFESSIONAL ENGINEER 19697PE OREGON MAY 5, 1998 BRIAN F. BARNETT

06 MAY 21

EXP DATE: 12-31-2021

May 5, 2021

NOT TO SCALE

DRAWN BY:	C. HANSEN
DESIGNED BY:	M. LIEBLER
CHECKED BY:	B. BARNETT

May 5, 2021

U:\Traffic\CAD_SPO\STANDARD_DRAWINGS\Springfield Traffic Standards\TSD5_18-R6.dwg