ATTACHMENT #1 - Radio System Diagrams

BASE STATION RADIO

RUGGEDCOM WIN7249-5 Small Form Factor Outdoor Base Station, includes power supply, 2x antenna cable 1.6 m, GPS receiver, GPS antenna and mounting kit; antenna and data cable ordered separately, 4900 MHz to 5000 MHz

P/N:RUM-WIN-7249

SUBSCRIBER RADIO

RUGGEDCOM WIN5249-5 High Gain Outdoor Subscriber unit, integrated directional dual slant antenna includes commercial grade power supply, 4900 MHz to 5000 MHz

P/N:RUM-WIN-5249

PoE Injector

RP100

RP100-HI-RM-C01- Single Port Power Injector (802.3af/802.3at)HI= Rated to 125- 250 VDC (88-300) or 100-240 VAC (85-264)RM = RuggedMax Power Delivery (RuggedMax devices only)C01 = Conformal Coating 2x 10/100TX ports

P/N:6GK6010-0AP01-2AA

RS910 Switch

RSL910

RUGGEDCOM RSL910 is a 10 port, industrially hardened, fully managed Ethernet switch with 128-bit encryption supporting 2 VDSL2 ports, 2 Gigabit Ethernet SFP ports and 6 Fast Ethernet RJ45 ports. The VDSL2 ports allow LAN segments up to 3km over telephone grade cable at up to 85 Mbps

P/N:6GK6491-0LB00-1CN0

RS900 Switch

RS900

RUGGEDCOM RS900 is a9-port, industrially hardened, fully managed Ethernet switch with 128-bit encryption supporting 6 Fast Ethernet RJ45 ports and up to 3 Fast Ethernet Fiber ports available over multiple fiber connector types and distances.

P/N:6GK6090-0AS23-0BA0-Z A00+B00

SECTOR ANTENNA

Sector Antenna 4.9 GHz, 90 degree sector antenna-16dBi, used at each base station radio

P/N:RUM-ANTN0074

Surge Protector

RJ-45 Surge Arrestor

P/N: RUM-99-55-0023-001

The reproduction, transmission or use of this document or its contents is not permitted without express written authority. Offenders will be liable for damages. All rights, including rights created by patent grant or registration of a utility model or design are reserved.

00	Released	04.06.19	VG	Design		City of Springfield	SIEMENS Ruggedcom Professional Services	Project: City of Springfield WiMAX Network Design	Doc Title: WiMAX Network Design	Sheet Title: Order Code			
Rev.	Revision	Date	Name	Released		Customer Reference	Siemens Order: TBD		Doc. / Format: 3 / Lang.: E			Sht.nr.: 3	Nr.shts.: 3 /41

Radio installation components for project P21137 Springfield Traffic Systems Moderization - Radio System

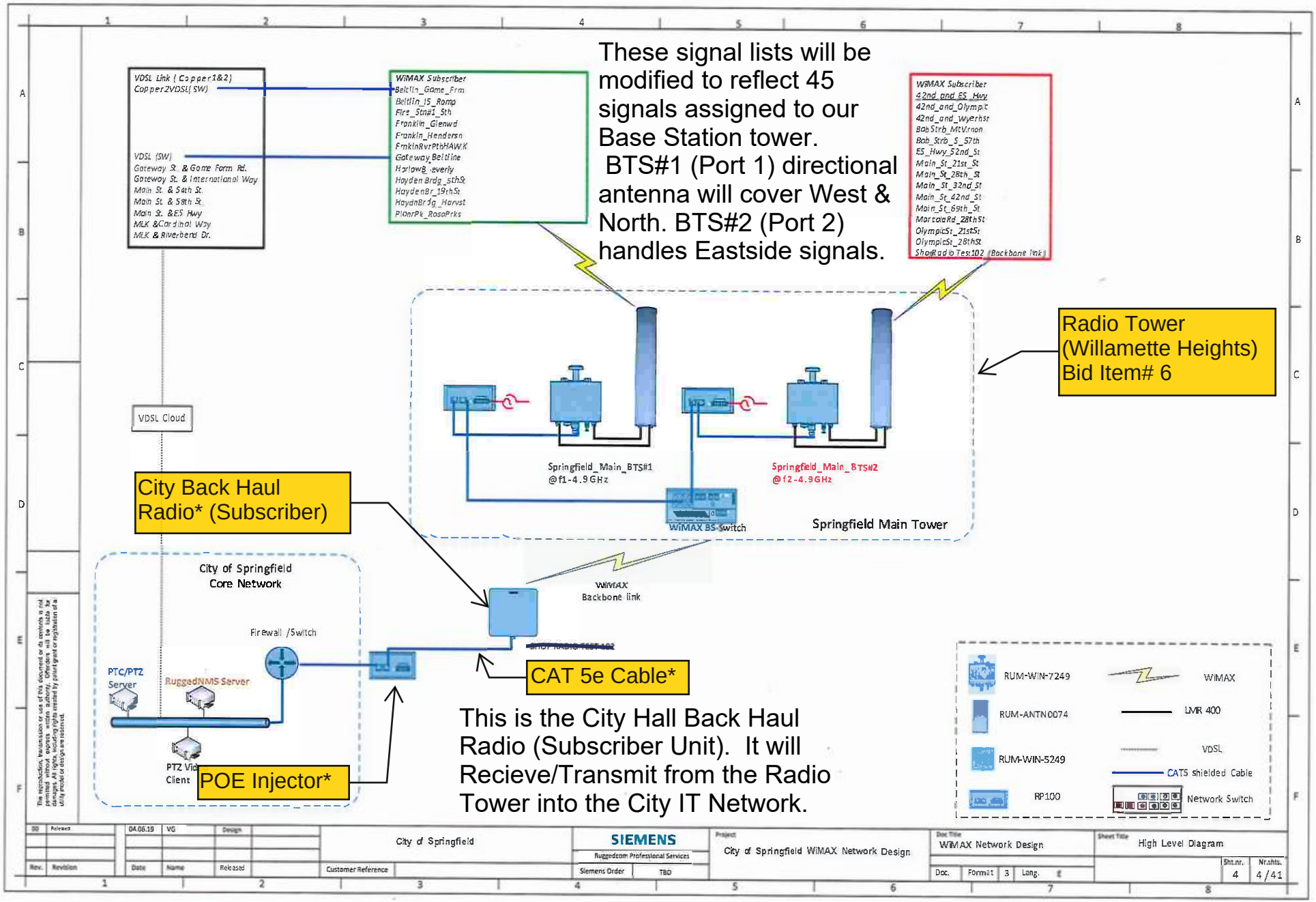

Radio configuration for the CITY BACK HAUL radio in BID ITEM# 1.
(*YELLOW highlighted text is bid item construction)

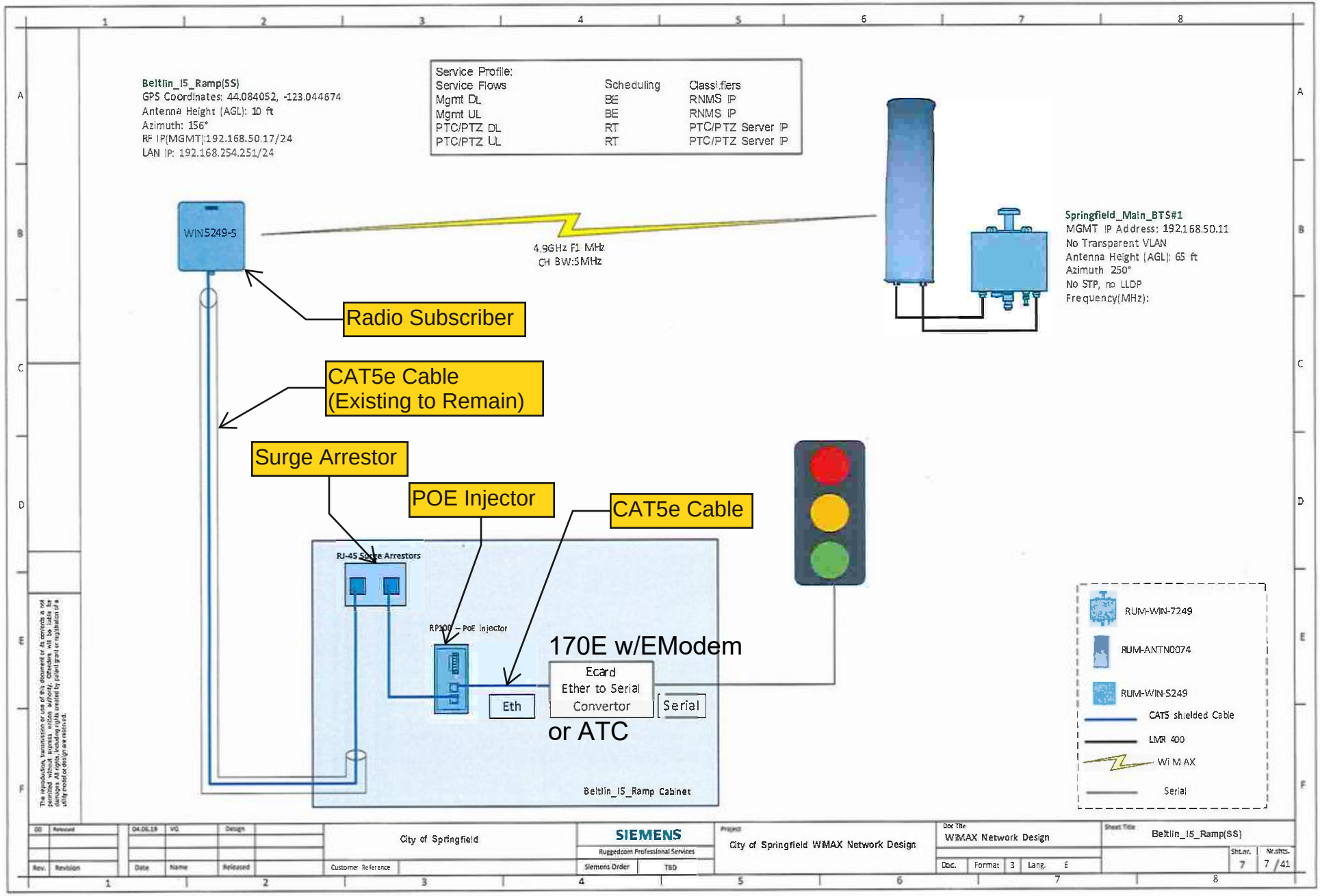

Radio configuration for the TRAFFIC SHOP subcriber radio in BID ITEM# 2.

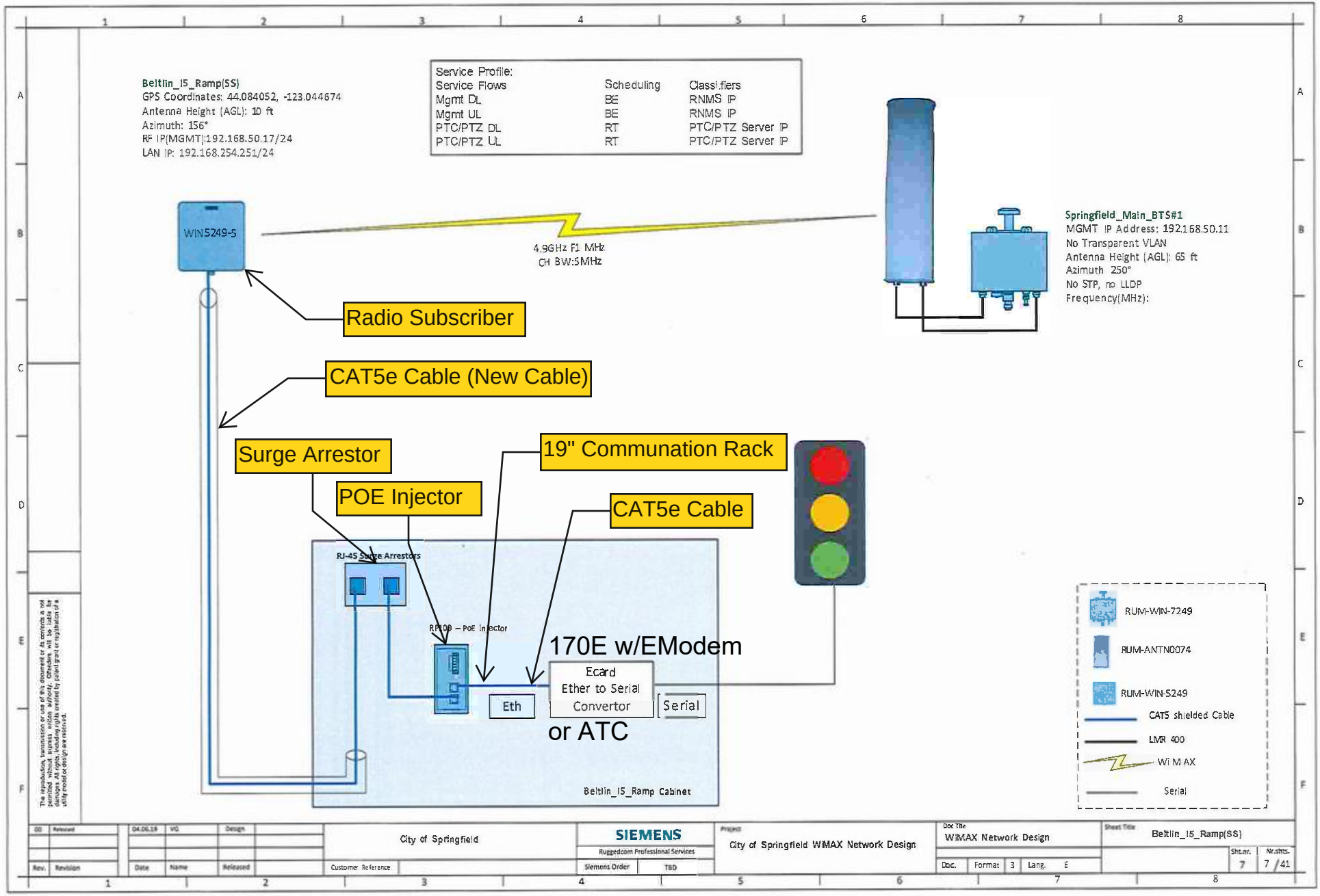

Radio configuration for the 40 TRAFFIC SIGNALS subcriber radios in BID ITEM# 3.

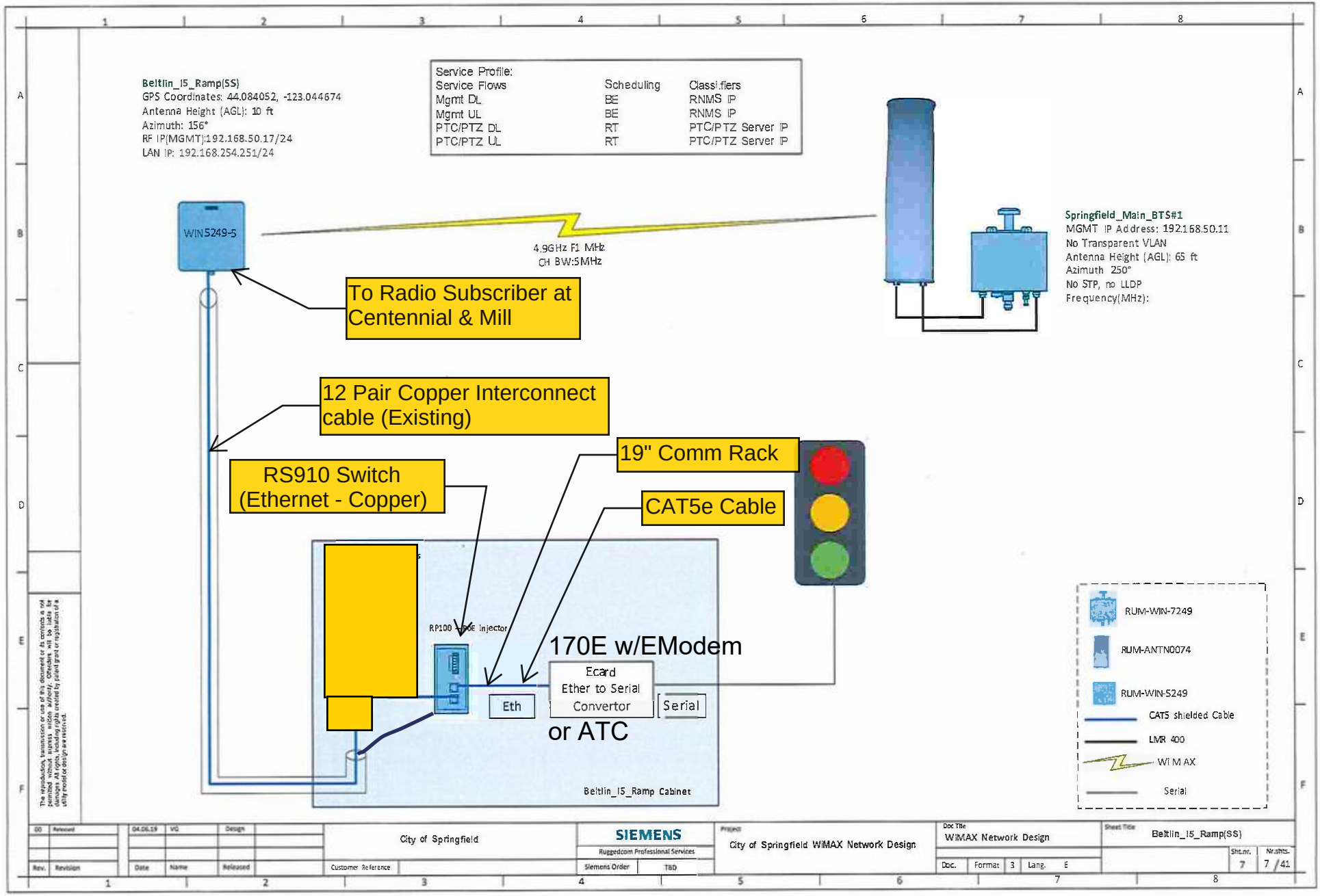

Radio configuration for the SWITCH install at the Centennial & Rainbow/Prescott signals in BID ITEM# 4. (These two signals have low RSSI (signal strenth) and require an Ethernet over Copper Switch (RS910) to utalize the existing interconnect cable and communicate to the radio at Centennail-Mill.)

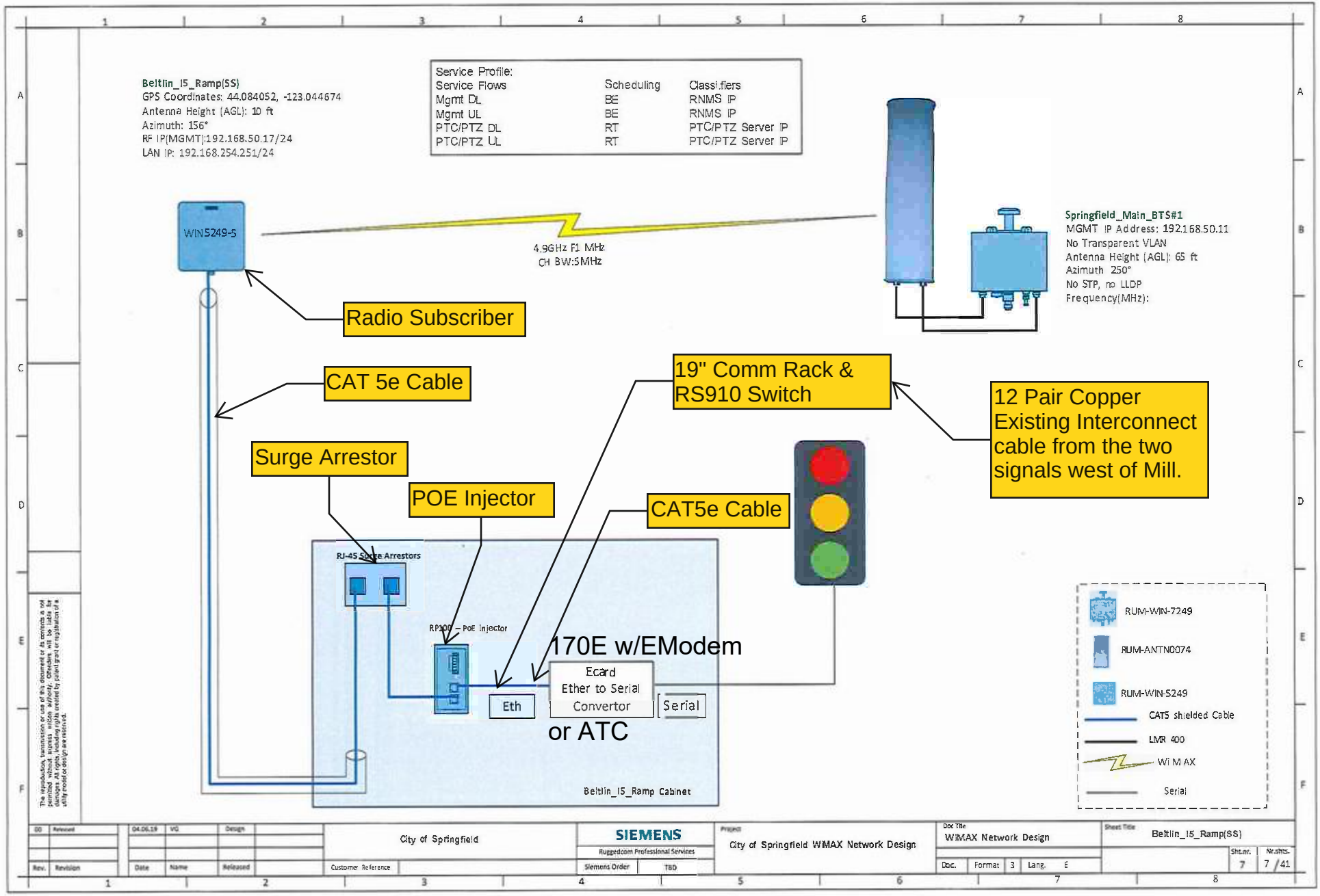

Radio configuration for the TRAFFIC SIGNAL at Centennial & Mill in BID ITEM# 5.

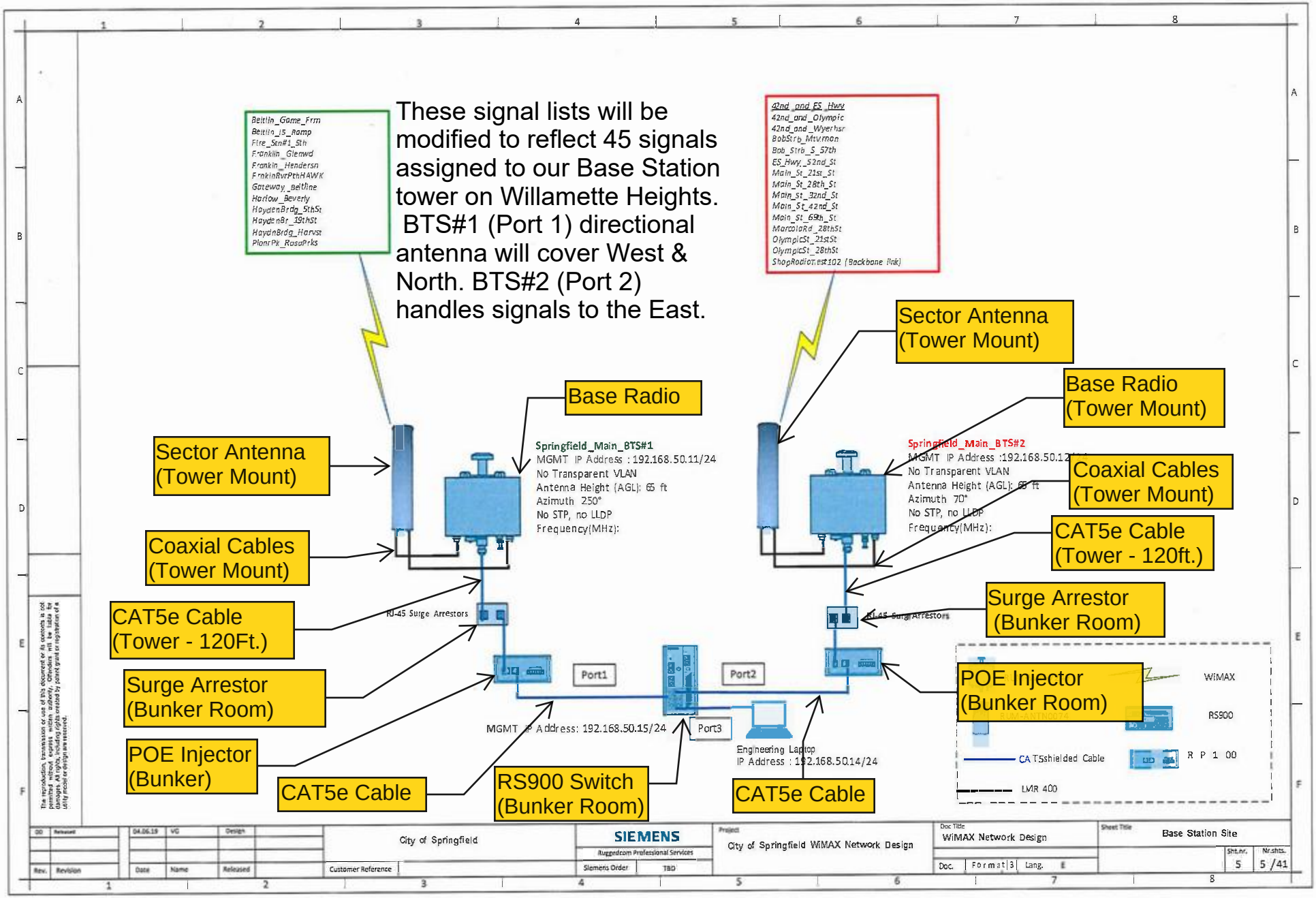

TOWER BASE STATION Radio(s) configuration for BID ITEM# 6.