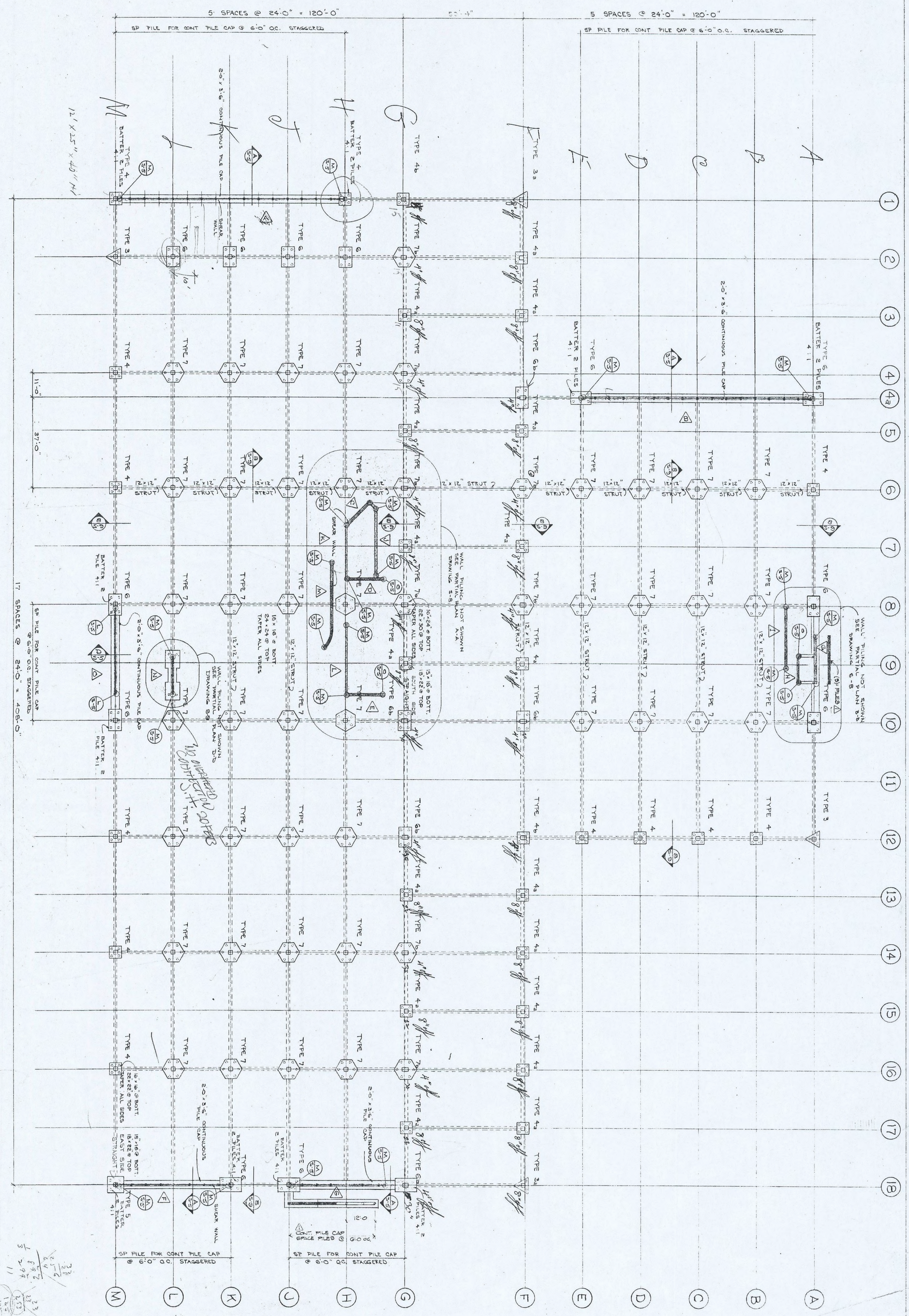

GENERAL NOTES

PRECAST - PRESTRESSED MEMBERS:

1. DOUBLE TEES AND GIRDERS DESIGNED IN ACCORDANCE WITH UBC 1970 AND ACI 318-71.
2. FABRICATE, TRANSPORT AND ERECT DOUBLE TEES AND GIRDER UNITS BY METHODS IN ACCORDANCE WITH PRESTRESSED CONCRETE INSTITUTE STANDARDS UNITS 103.
3. ACCORDANCE WITH PRESTRESSED CONCRETE INSTITUTE STANDARDS UNITS 103.
4. STRUCTURE TO BE ADEQUATELY BRACED FOR WIND AND SEISMIC LOADS UNTIL WALLS AND TOPPING SLABS ARE INSTALLED AND CURED TO REQUIRED STRENGTH.

DESIGN LOADS:

COLUMNS:	100 PSF	LIVE LOAD PUBLIC AREAS
	75 PSF	LIVE LOAD RETAIL SHOP AREAS
	75 PSF	RETAIL SHOPS BUILDINGS

PLATFORM:	100 PSF	LIVE LOAD } PUBLIC AREAS
	40 PSF	MISC
	75 PSF	LIVE LOAD } RETAIL SHOPS AREAS
	25 PSF	PARTITIONS + FIXTURES
	40 PSF	MISC.

	25 PSF	ASSUMED D.L. ROOF
	25 PSF	SNOW LOAD
	25 PSF	PARTITIONS + FIXTURES

5. CHAMFERS 3/4" TYP
6. 4 x 4 - 6/6 W.W.F. TYP IN SLAB TOPPING
7. TRANSVERSE = 4 x 6'-0" @ 12'-0" O.C. OVER GIRDERS
8. (2) #5 BAR TOP + BOTT ALL WALLS - UNLESS SHOWN OTHERWISE

Sheet	Title	Drawn	Checked	Date	Revised
S-1	PILING FOUNDATION PLAN	R. L.	J. H. H.	AUG. 25, 1972	Nov 7, 72

REGISTERED PROFESSIONAL ENGINEER 5742 OREGON July 8, 1969 JOHN H. HERRICK

SPRING VILLAGE

Springfield, Oregon

Architect: M. L. Rosenberg, A.I.A.
Owner: Springfield Development Corporation

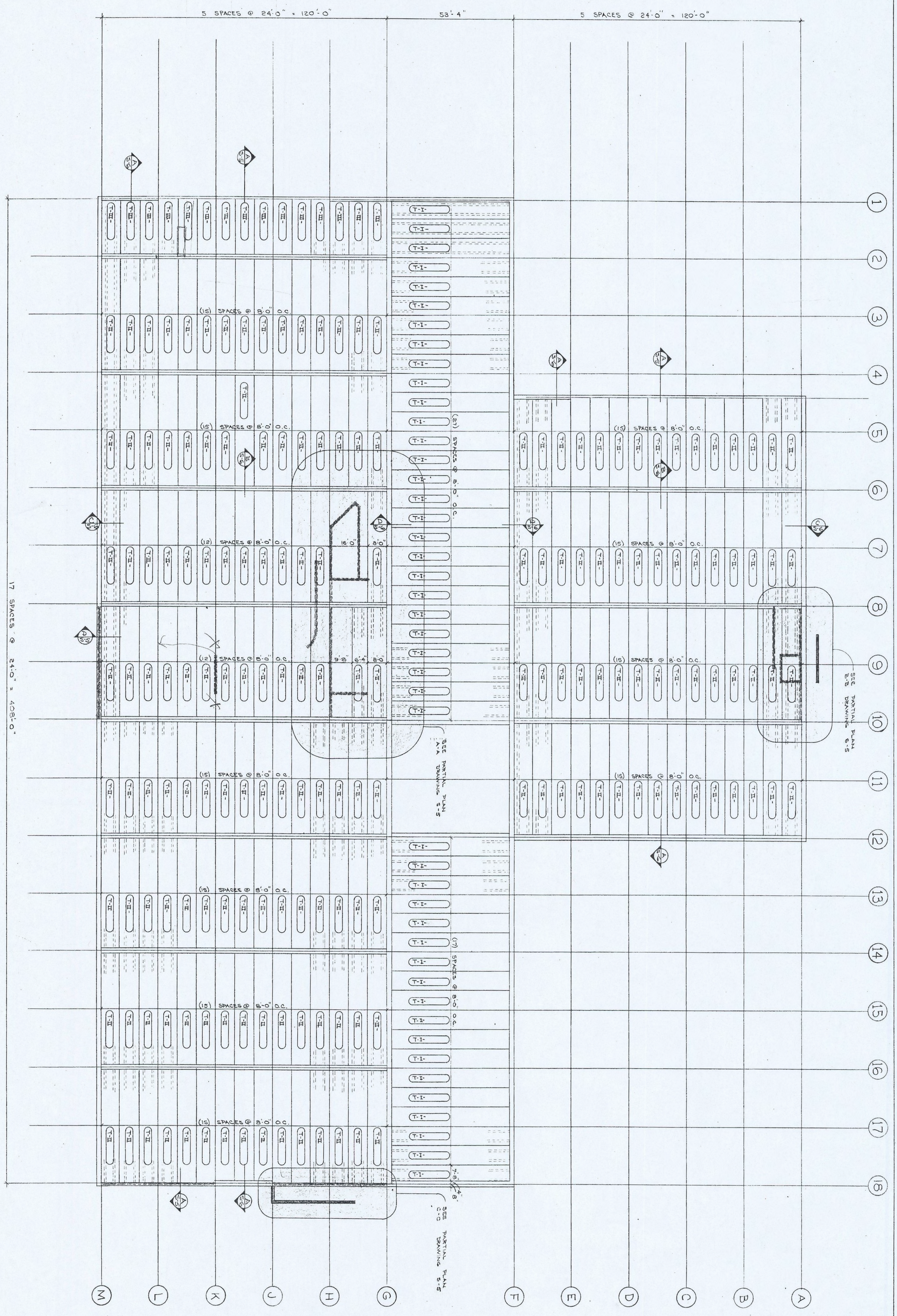

1ST FLOOR DOUBLE TEE LAYOUT

1/16" = 1'-0"

Sheet	Title	Drawn	Checked	Date	Revised
2	MALL LEVEL FRAMING PLAN	R.L	J.H.H	AUG 25, 1972	

REGISTERED PROFESSIONAL ENGINEER — OREGON — JOHN H. PRICK — July 8, 1968

SPRING VILLAGE

Springfield, Oregon

Architect: M. L. Rosenberg, A.I.A.

Owner: Springfield Development Corporation

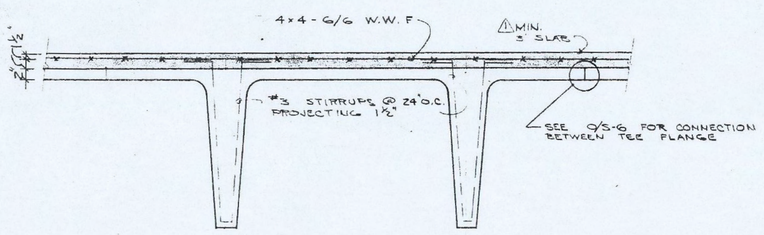

A/S-3 TYP SLAB TO TEE CONN.

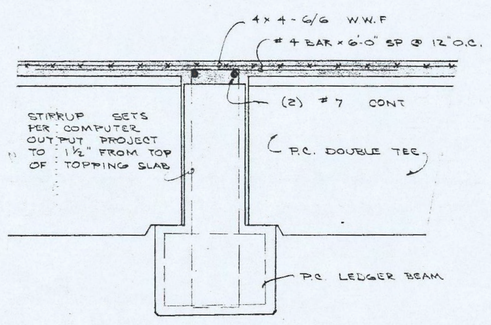

B/S-3 TYP SLAB TO LEDGER BEAM CONN.

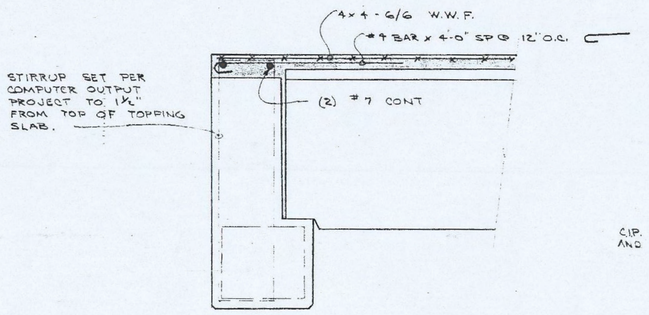

C/S-3 TYP SLAB TO L BEAM CONN

NOTE: SEE SHEET S-6 FOR MEMBER DIMENSIONS

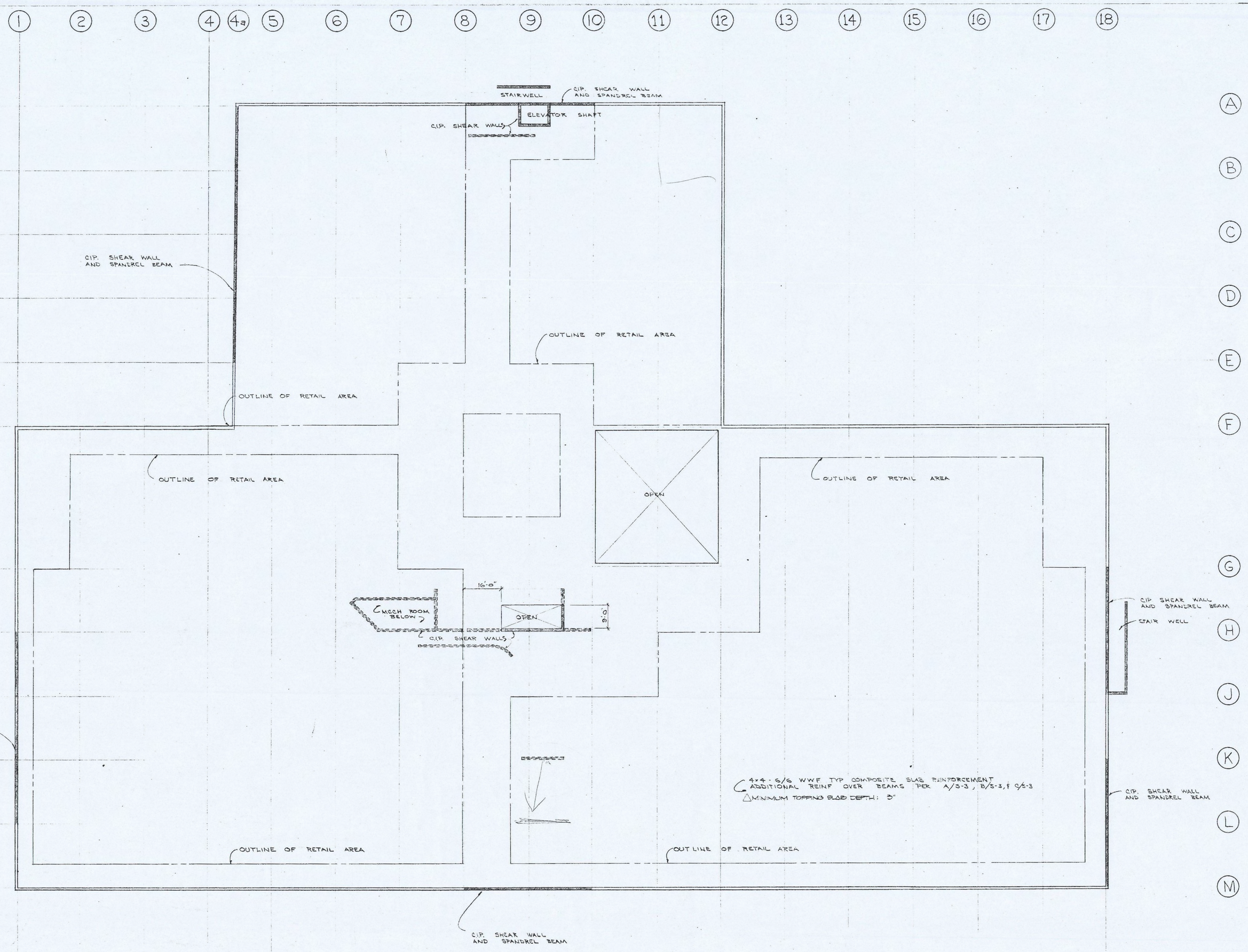

Springfield, Oregon

SPRING VILLAGE

Architect: M. L. Rosenbr / rg; A.I.A.
Owner: Springfield Dev lopment Corporation

REGISTERED PROFESSIONAL ENGINEER STEVEN A. MAHAN 21794 OREGON AUG 8 1989 EXPIRES 12-31-72

Drawn R.L.
Checked J.H.H.
Date AUG 25, 1972
Revised △ NOV 7, 72

Title MALL LEVEL PLAN

Sheet S-3

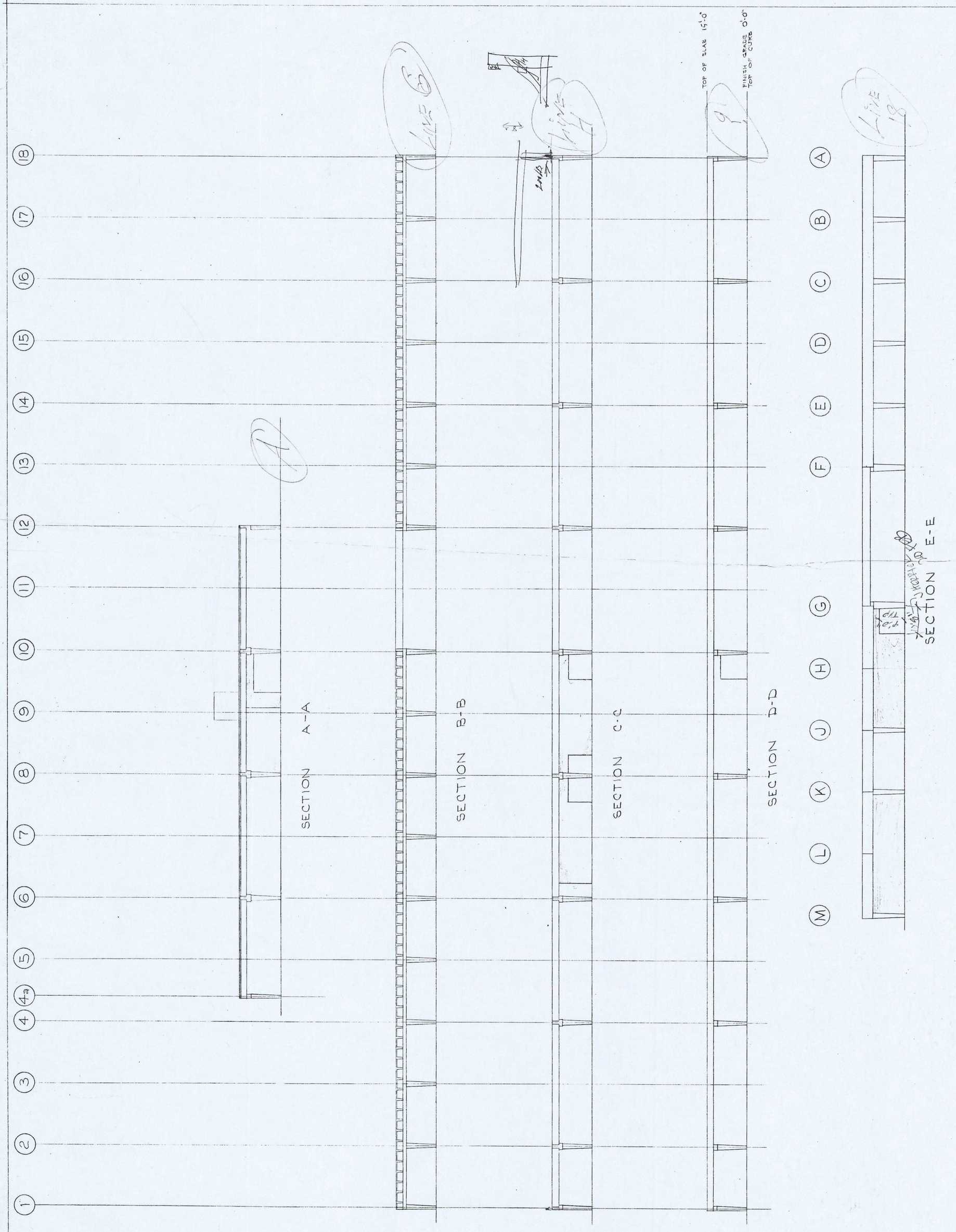

Sheet	Title	Drawn	Checked	Date	Revised
S-4	MALL SECTIONS	R.L.	J.H.H.	AUG 25, 1972	

REGISTERED PROFESSIONAL ENGINEER STATE OF OREGON JOHN H. HERRICK July 8, 1986

SPRING VILLAGE

Springfield, Oregon

Architect: M. L. Rosenberg, A.I.A.
Owner: Springfield Development Corporation

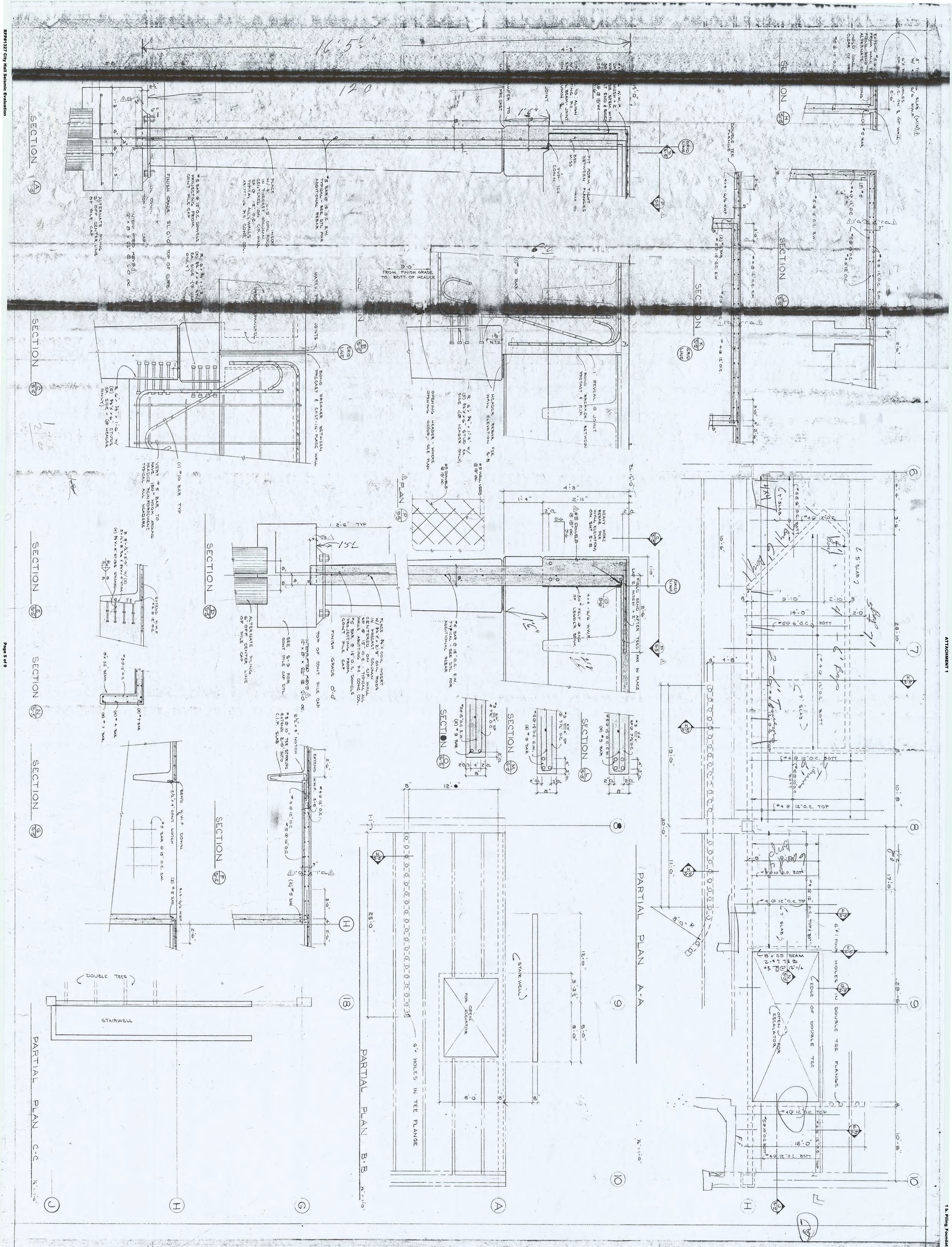

Sheet	Title	Drawn	Checked	Date	Revised
S-5	STRUCTURAL DETAILS	R.L.	J.H.H.	AUG 25, 1972	NOV 7, 1972

REGISTERED PROFESSIONAL ENGINEER — OREGON — JOHN H. HICK

SPRING VILLAGE

Springfield, Oregon

Architect: M. L. Rosenberg, A.I.A.
Owner: Springfield Development Corporation

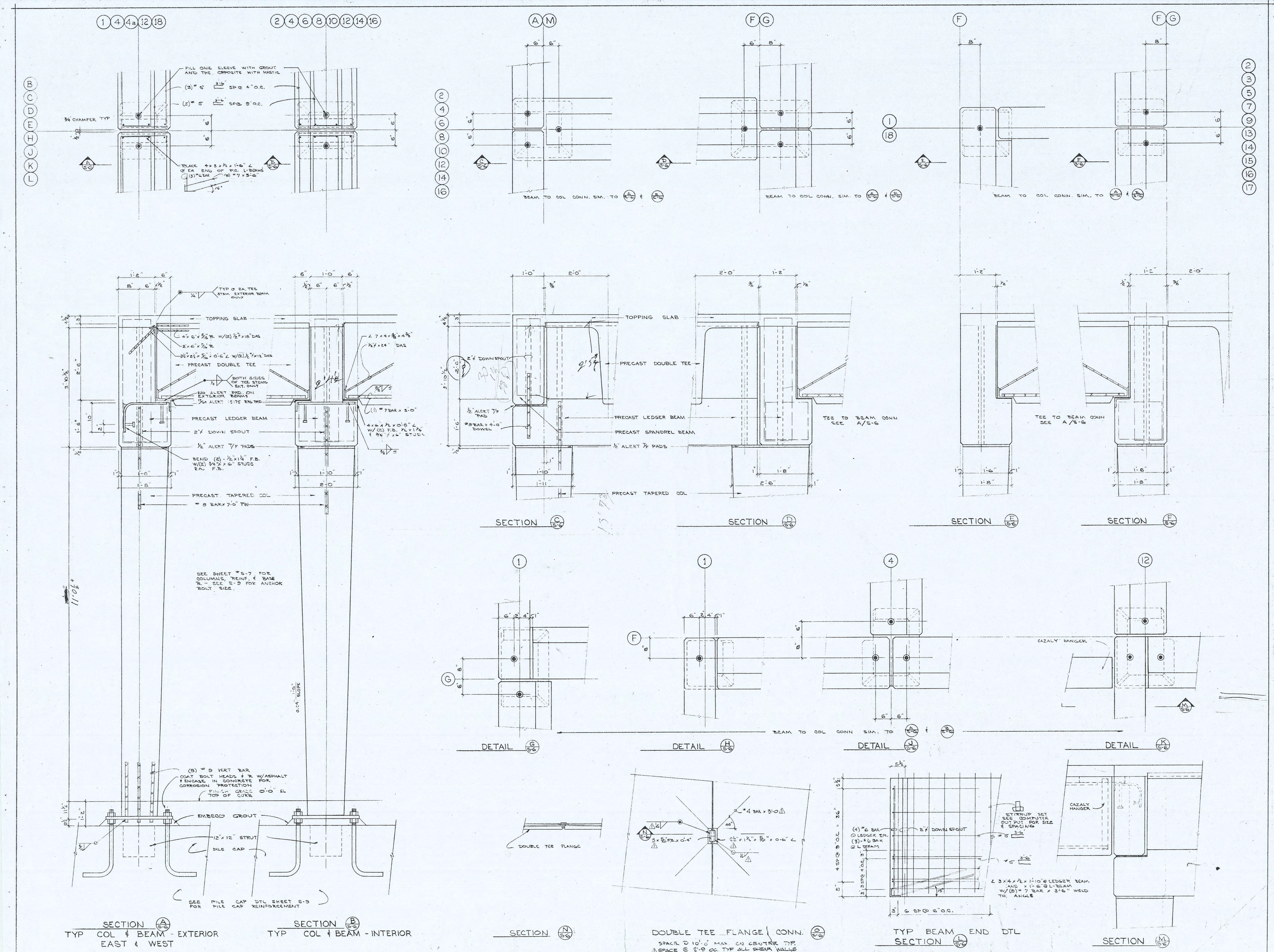

SECTION A/S-6 TYP COL & BEAM - EXTERIOR EAST & WEST

SECTION B/S-6 TYP COL & BEAM - INTERIOR

SECTION C/S-6

SECTION D/S-6

SECTION E/S-6

SECTION F/S-6

DETAIL G/S-6

DETAIL H/S-6

DETAIL J/S-6

DETAIL K/S-6

SECTION N/S-6

DOUBLE TEE FLANGE CONN. O/S-6

SECTION L/S-6

SECTION M/S-6

Springfield

Architect:
Owner

SPRING VILLAGE

Drawn R.L.
Checked J.H.H.
Date AUG. 25, 1972
Revised NOV 7, 1972

Title STRUCTURAL DETAILS

Sheet S-6

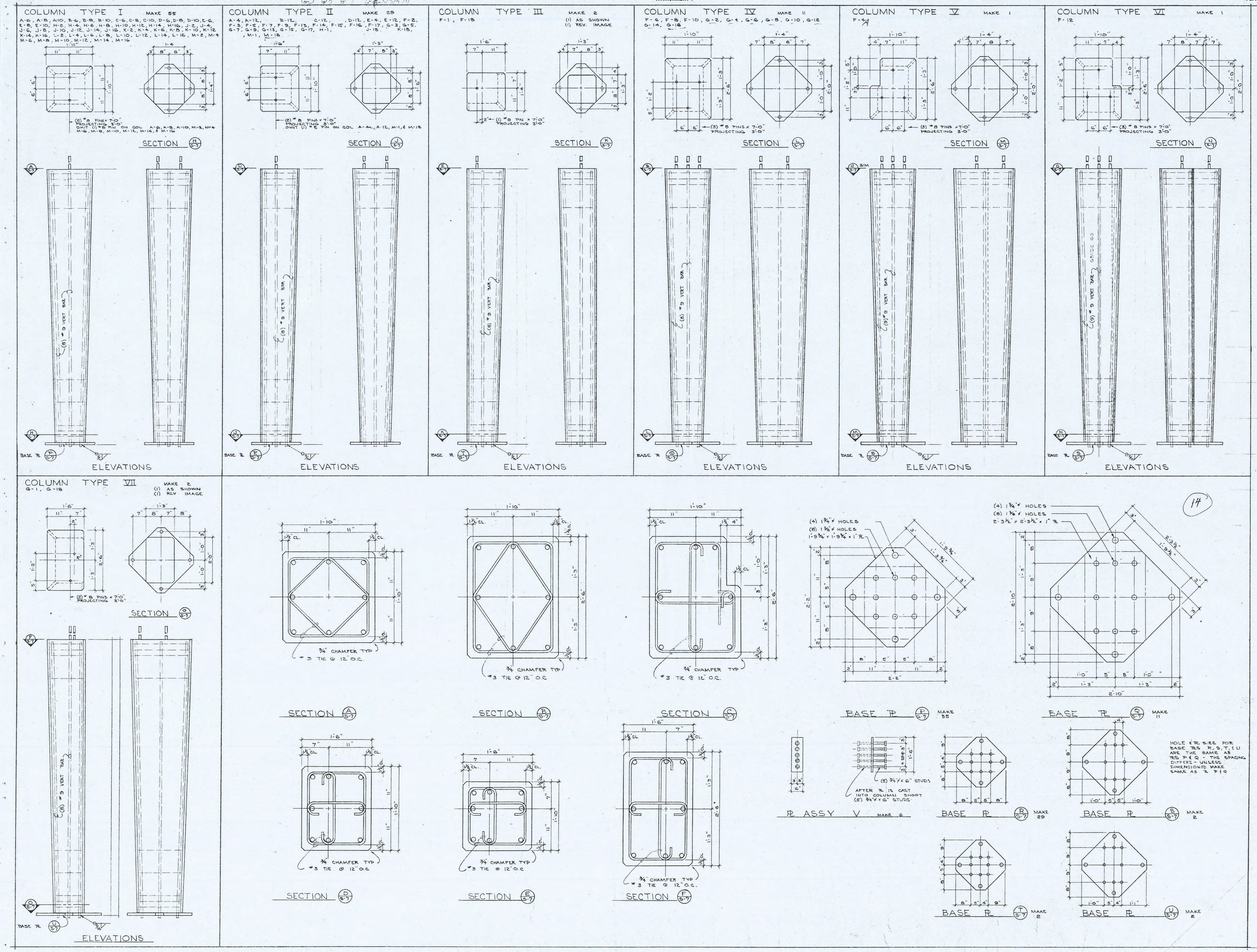

SPRING VILLAGE

Springfield, Oregon

Architect: M. L. Rosenberg, A.I.A.
Owner: Springfield Development Corporation

Drawn R. L.
Checked J. H. H.
Date AUG 25, 1972
Revised

Title PRECAST COLUMNS

Sheet S-7

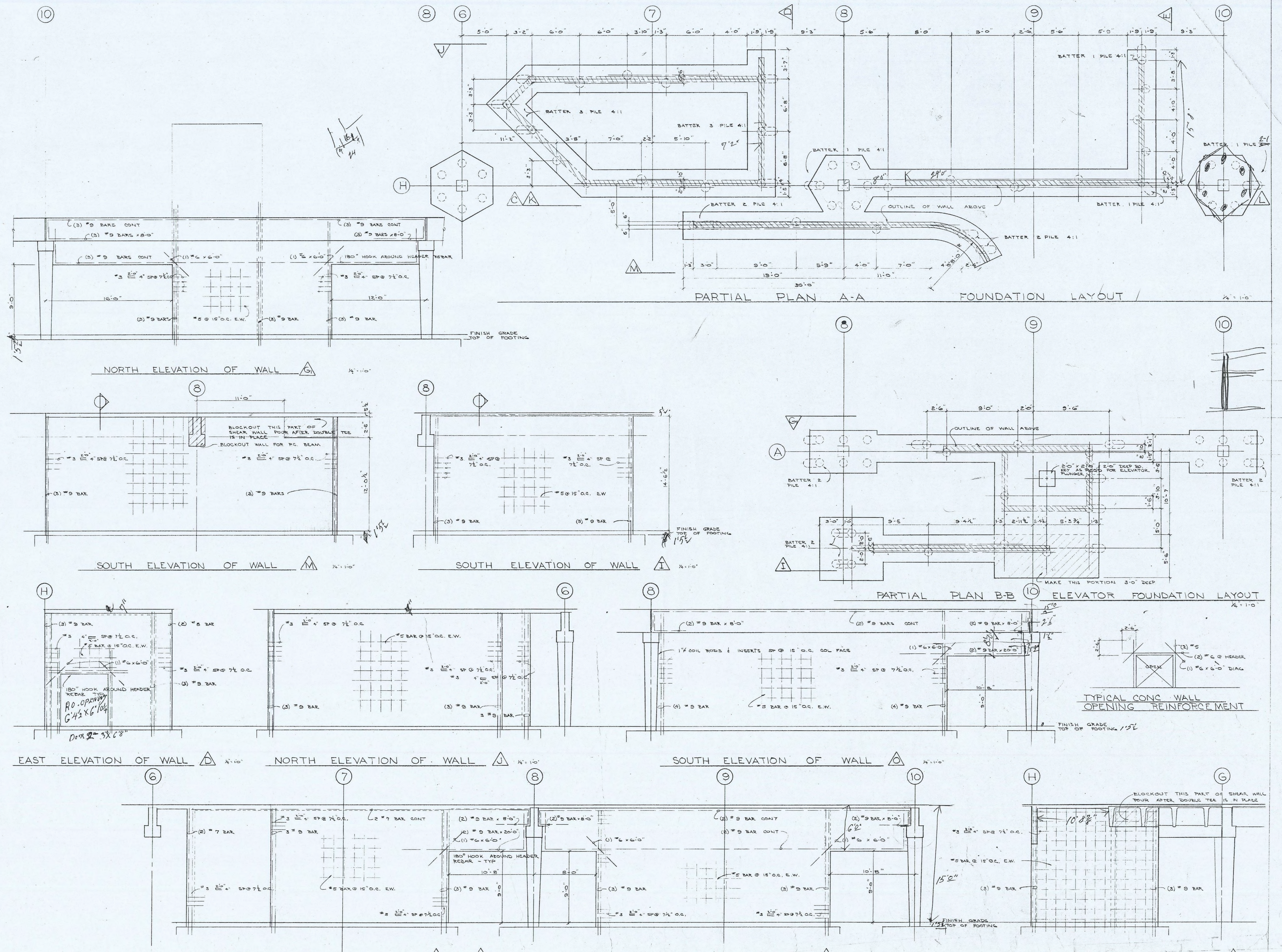

Springfield, Oregon

Architect: M. L. Rosenberg- A.I.
Owner: Springfield Developmen

SPRING VILLAGE

Drawn R. L.
Checked J. H. H.
Date AUG 25, 1972
Revised

Title PILING FOUNDATION DETAILS

Sheet S-8

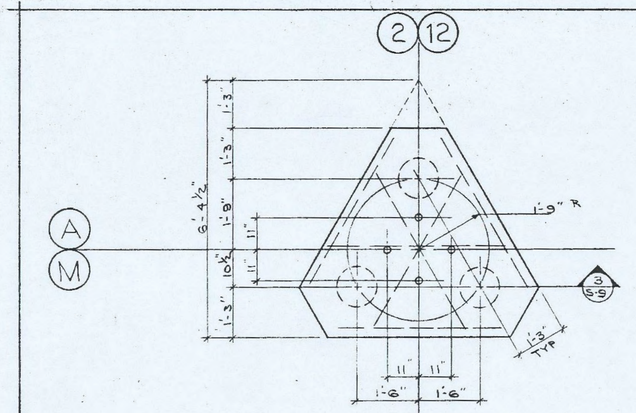

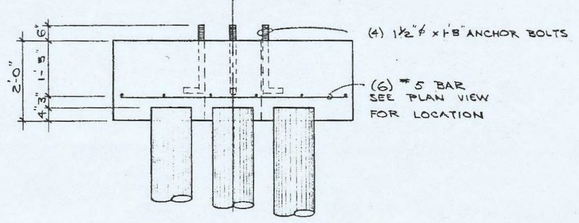

SECTION 3/S-9
PILE CAP TYPE 3

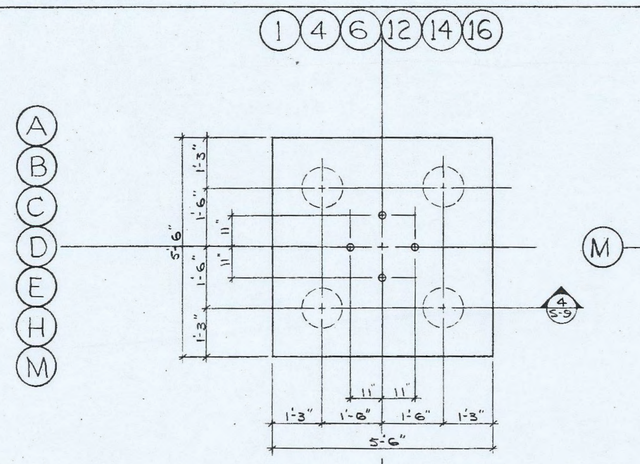

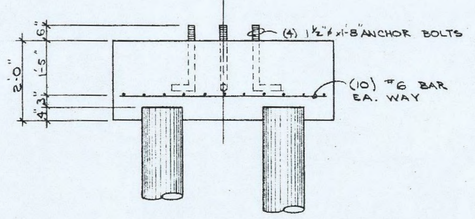

SECTION 4/S-9
PILE CAP TYPE 4

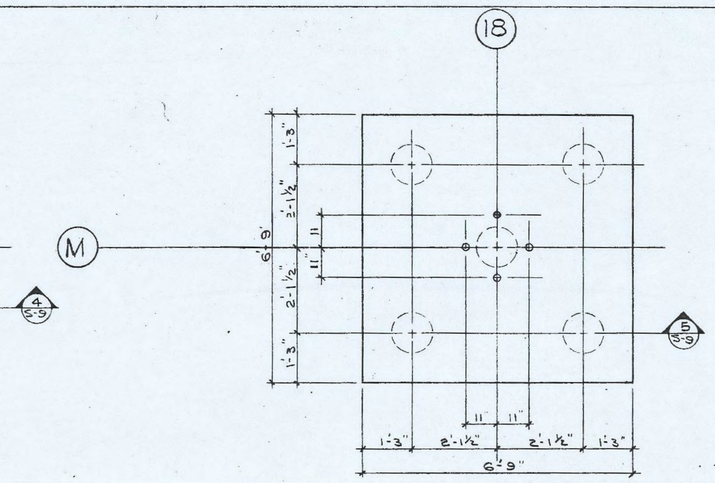

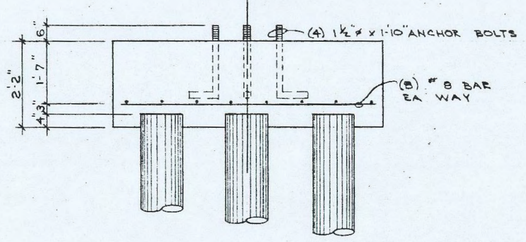

SECTION 5/S-9
PILE CAP TYPE 5

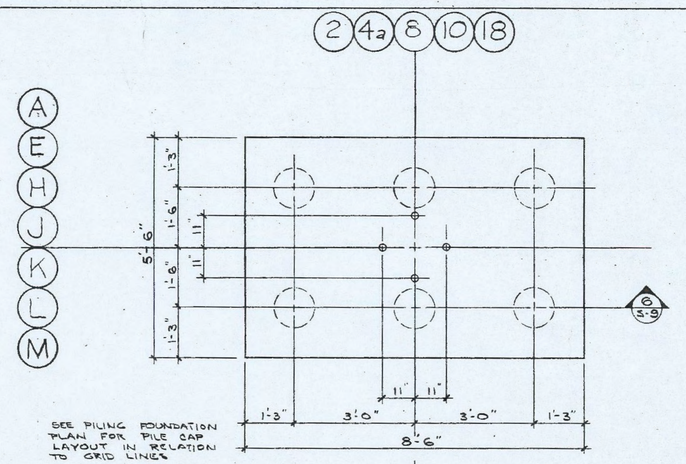

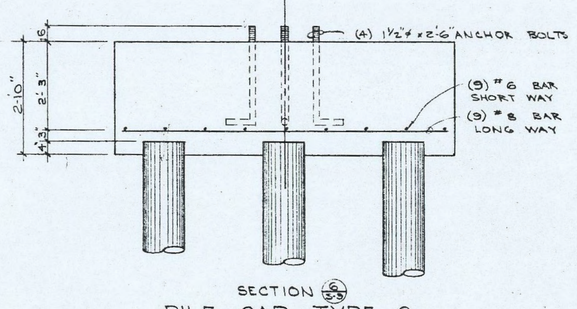

SECTION 6/S-9
PILE CAP TYPE 6

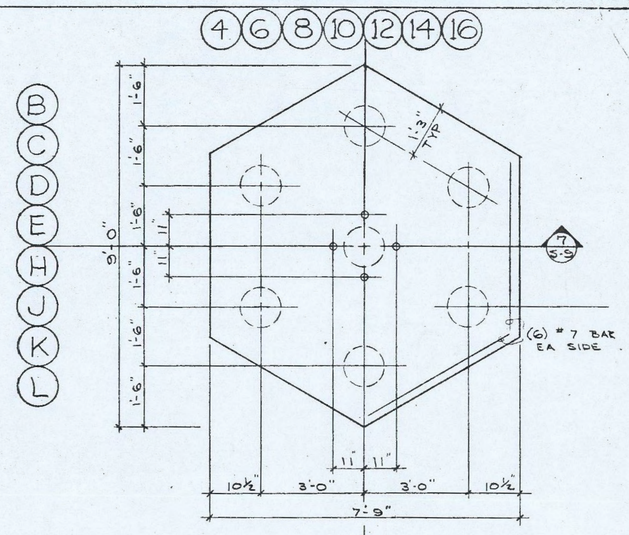

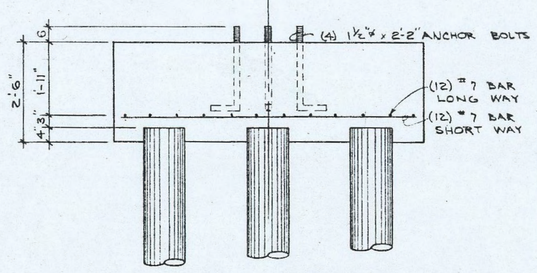

SECTION 7/S-9
PILE CAP TYPE 7

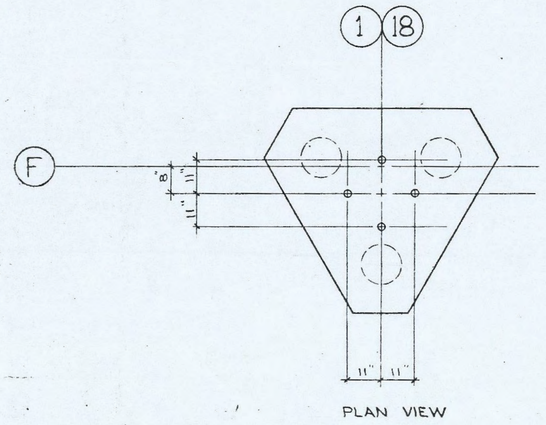

PILE CAP TYPE 3a

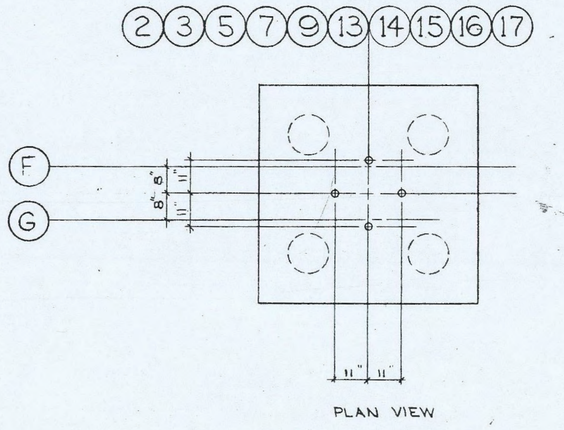

PILE CAP TYPE 4a

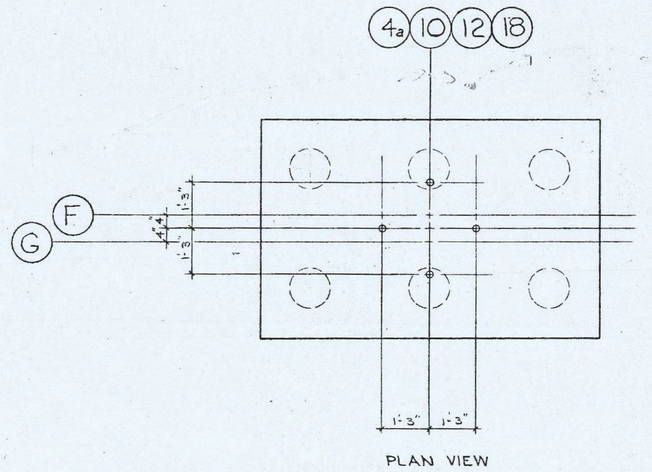

PILE CAP TYPE 6b

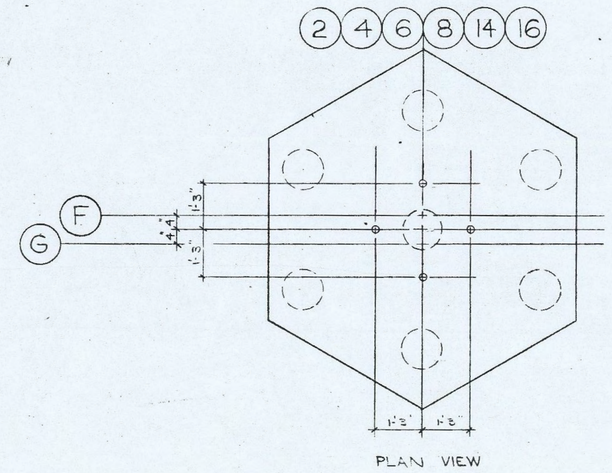

PILE CAP TYPE 7b

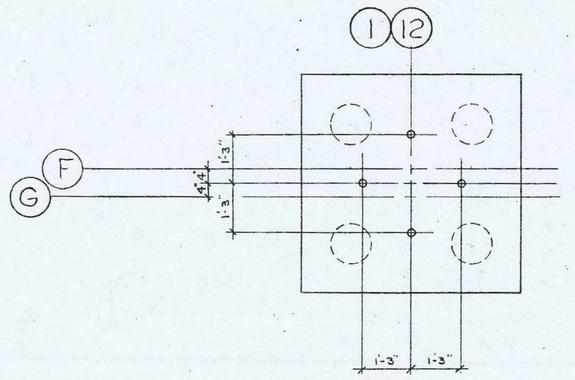

PILE CAP TYPE 4b

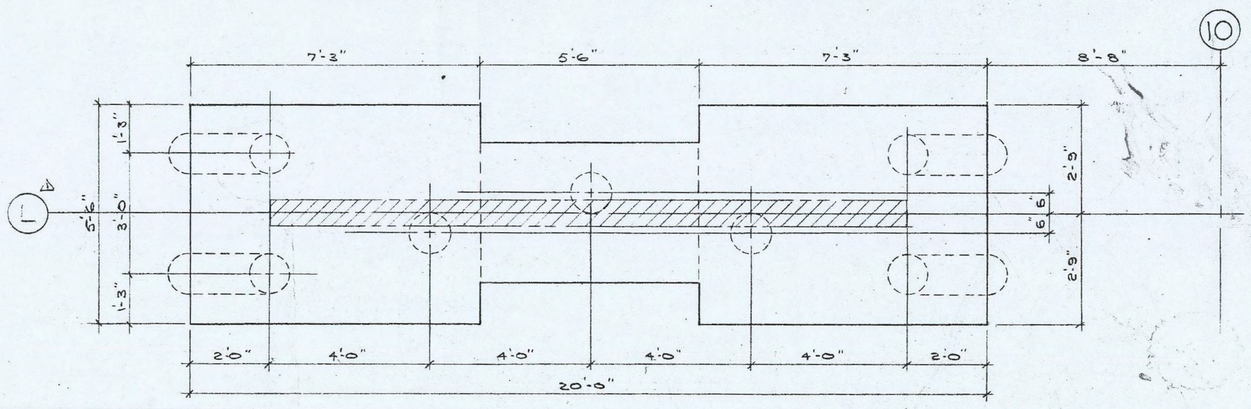

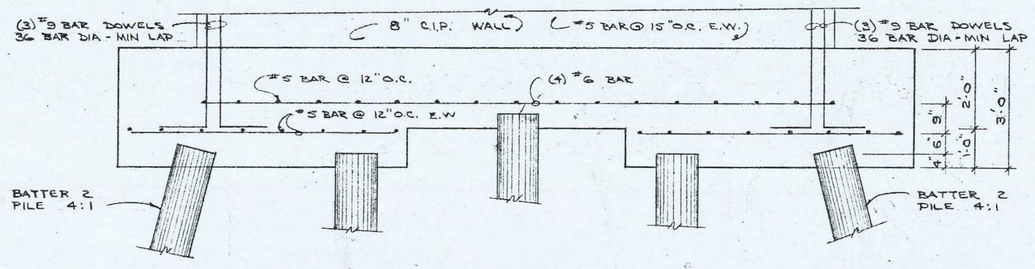

PARTIAL FOUNDATION PLAN D-D

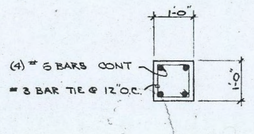

SECTION 8/S-9
TYPICAL STRUT

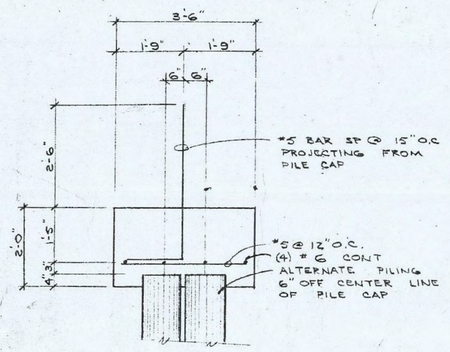

CONTINUOUS PILE CAP 9/S-9

SPRING VILLAGE

Springfield, Oregon

Architect: M. L. Rosenberg, A.I.A.
Owner: Springfield Development Corporation

Drawn R. L.
Checked J.H.H.
Date AUG 25 1972
Revised △ NOV 7 1972

Title PILE CAP DETAILS & PILING NOTES

Sheet S-9