City of Springfield
Public Improvement Project

Invitation to Bid for:

P21080
Franklin/McVay Sanitary Sewer Extension

The information provided is an abridged version of the complete Invitation to Bid and is provided for review and informational purposes only. To submit a bid for consideration, a complete set of bid documents is required.

A complete set of bid documents may be viewed or purchased at the address shown below:

City of Springfield
Development and Public Works Department
225 Fifth Street
SE Quad
Springfield, OR 97477

Contact: Terri White at 541-726-3628 or twhite@springfield-or.gov

City of Springfield
Community Development Division

SPECIFICATIONS
for

P21080

Franklin/McVay Sanitary Sewer Extension

MANDATORY PRE-BID MEETING		**BID OPENING**	
Date:	**June 5, 2014**	**Date:**	**June 18, 2014**
Time:	**9:00 am**	**Time:**	**2:00 pm**
Location:	**City of Springfield**	**Location:**	**City of Springfield**
	City Hall		**City Hall**
	Library Meeting Room		**Library Meeting Room**
	225 Fifth Street		**225 Fifth Street**
	Springfield, OR 97477		**Springfield, OR 97477**

The deadline for submission of project specific questions prior to bid opening is June 11, 2014 at 9:00 am as specified in Section 3.3 of the Instruction to Bidders.

This Project is funded in full or in part by:
State Funds
✓ **Neither State nor Federal Funds**

Please Take Note: All information required must be submitted as directed.

For your Bid to be considered responsive by the City of Springfield you must include all documents included in the Invitation to Bid with your Bid. Additionally, any addendums or revisions must be acknowledged and submitted with your Bid. *The only exception to this is any plans or drawings, which are not required to be submitted as a part of your Bid.*

All documents requesting information must be completed in full and signed where appropriate. *The only exceptions to this requirement are the sample Performance Bond, Payment Bond and Contract documents which are provided here as a reference. However, if you are awarded the Bid, you will be required to submit fully executed copies of these documents upon request.*

A complete description of submittal requirements can be found in the Instruction to Bidders document included in this request for bid under the heading; **5. Bid.**

TABLE OF CONTENTS

State and Local Funding

1. Invitation to Bidders
2. Bid Submittal, Terms and Declarations
3. Instruction to Bidders
4. Contract (Sample)
5. Prevailing Wage Rate Information
6. Special Provisions – Section A; General Requirements
7. Special Provisions – Section B; General Conditions
8. Special Provisions – Section C; Measurement and Payment
9. Special Provisions – Section D; Submittals
10. Special Provisions – Section E; Temporary Traffic Control
11. Special Provisions – Section F; Construction Survey Work
12. Special Provisions – Section G; Subsurface Investigations
13. Special Provisions – Section H; Dewatering
14. Special Provisions – Section I; Earthwork
15. Special Provisions – Section J; Pavement and Surface Restoration
16. Special Provisions – Section K; Pavement Markings
17. Special Provisions – Section L; Sanitary Sewer Main Cleaning and TV Inspection
18. Special Provisions – Section M; Sewage Diversion and Bypass Pumping
19. Special Provisions – Section N; Pumps, General
20. Special Provisions – Section O; Submersible Sewage Pumps
21. Special Provisions – Section P; Testing Training and System Startup

22. Special Provisions – Section Q; Piping, General

23. Special Provisions – Section R; General Electrical Provisions

24. Special Provisions – Section S; Basic Electrical Materials and Methods

25. Special Provisions – Section T; SUB Waterline and Electrical Facilities

26. Standard Drawings and Plans

27. Supplementary Information

    Appendix A – Reports Prepared by Others

    Prepared by Foundation Engineering, Inc. (FEI):

    - Phase II Geotechnical Investigation, Franklin/McVay Sanitary Sewer Extension, City of Springfield, Oregon, 11/13/13
    - Addendum to Phase II Geotechnical Investigation
    - Memorandum with Piezometer Readings 4/15/14

    Appendix B – Permits and Approvals

    - Union Pacific Railroad (UPRR)
      City of Springfield Pipeline Crossing Agreement dated 02-06-14
      Springfield Utility Board Water Crossing Permit (to follow)
      Springfield Utility Board Electrical Crossing Permit (to follow)
    - Lane County, Oregon
      Lane County Facilities Permit dated 05-14-14

    Appendix C – Record Drawings

    - Glenwood Wastewater Trunk Pipe, Selected Sheets
      Franklin Boulevard and McVay Highway, Prepared by EGR & Associates, Inc., 2004
    - Wildish Wastewater System, Selected Sheets
      Prepared by Poage Engineering & Surveying, Inc., 1995

28. First Tier Subcontractor Disclosure Form

29. Financial Responsibility Form

30. Minority, Women and Emerging Small Business/Disadvantaged Business

31. Bid Bond (Sample)

32. Performance Bond (Sample)

33. Payment Bond (Sample)

34. Addenda, if any

CITY OF SPRINGFIELD, OREGON
Invitation to Bidders

Public Works Improvement Project

Sealed bids will be received at the office of the Finance Director, Robert Duey at the City of Springfield Finance Department, 225 Fifth Street, Springfield, OR 97477, until, but no later than, 2:00 p.m. Local Time, the 18th day of June, 2014 and opened at 2:05 p.m. the same day at the same location, for the construction of the following public works improvement project in the City of Springfield:

Project No. P21080 **Title: Franklin/McVay Sanitary Sewer Extension**

Description:

Schedule A - Construction of approximately 4,000 linear feet of 18-inch diameter gravity sanitary sewer pipeline, approximately 5 to 20 feet deep, within the public right-of-way from the intersection of Franklin Blvd and the Franklin/McVay Highway to a location approximately 4,000 feet south of the intersection; 540 linear feet of 8-inch diameter PVC piping; fittings and appurtenances; manholes; connections to existing sanitary sewer systems, paving and striping; removal and replacement of existing sidewalk; surface restoration; and performance of additional and incidental work as called for by the project contract documents.

Schedule B - Approximately 350 linear feet of 16-inch DI waterline and electrical conduit ranging in size from 2-inch to 4-inch, including open trench installation of steel casings under the existing UPRR railroad trestle.

Schedule C (Additive Alternate) - Modifications to the existing Nugget Way sanitary sewage pump station and force main. Construction of approximately 900 linear feet of 12-inch diameter PVC gravity sanitary sewer pipeline, approximately 6 to 12 feet deep, within the public right-of-way from the intersection of Franklin/McVay Highway and 19th Avenue to the intersection of 19th Avenue and Nugget Way, fittings and appurtenances; manholes; paving and striping; surface restoration; and performance of additional and incidental work as called for by the project contract documents.

The above general outline of principal features of the work does not in any way limit the responsibility of the Contractor(s) to perform all work and furnish all equipment, labor and materials required by the contract documents.

Bid documents are available from the Department of Development and Public Works, City of Springfield, 225 Fifth Street, Springfield, OR 97477, for a non-refundable fee of $60 and are available for viewing at this location. Bid documents available on line at http://www.springfield-or.gov/DPW/InvitationBid.htm and those on file at plan centers are incomplete and cannot be used to submit bids. The 1994 edition, as most recently amended, of the City's Standard Construction Specifications, with subsequent revisions, are available for a fee of $40.00 or can be viewed on-line at http://www.springfield-or.gov/DPW/StandardConstructionSpecifications.htm.

A MANDATORY pre-bid meeting will be held on June 5, 2014 at 9:00 a.m. in the Library Meeting Room.

All questions should be addressed to Terri White, Engineering Assistant, at 541-726-3628 or twhite@springfield-or.gov. The deadline for submission of questions regarding this Invitation to Bid is June 11, 2014 at 9:00 a.m. Contact with any other City officials may be grounds for disqualification of bid.

No Bid will be received or considered by the City unless the bidder has a current, valid certificate of registration issued by the Construction Contractor's Board as defined in ORS 701.005 and/or a valid landscape contractors license as defined in ORS 671.520 by the State Landscape Contractor's Board, as applicable, at the time the Bid is made and unless the bid contains a statement by the bidder as part of his/her bid that the provisions required by ORS 279C.838 through ORS 279C.870 shall be included in his/her contract. In accordance with ORS 279C.365, the City of Springfield will require that each bid must contain a statement as to whether the bidder is a resident bidder, as defined in ORS 279A.120.

The City of Springfield encourages contractors, sub-contractors and vendors who are minority, woman-owned and emerging small businesses to participate in City projects.

The City of Springfield may reject any or all bids not in compliance with all prescribed public bidding procedures

and requirements, including the requirement to demonstrate the bidder's responsibility under ORS 279C.375, or waive minor irregularities not affecting substantial rights and may reject for good cause any or all bids upon a finding of the City of Springfield it is in the public interest to do so and accept such bids that in the opinion of the Springfield City Council are in the best interest of the City.

Bids will be accepted and awarded in accordance with the City of Springfield's document on general conditions and standard specifications for public works construction.

Note: If applicable to this project, the First-Tier Subcontractor Form must be completed in full and submitted by the specified deadline or the bid will be rejected.

ROBERT J. DUEY
Finance Director

Published: Daily Journal May 23, 2014 and May 30, 2014
Register Guard Publishing May 23, 2014 and May 30, 2014

City of Springfield
225 Fifth Street
Springfield, OR 97477

Bid Submittal

Project No. P21080
Project Title: Franklin/McVay Sanitary Sewer Extension

The lowest responsive bidder shall be determined based on the combined total of Schedules A, B and C. However, should the City determine it is not in the best interest of the City to award Schedule C, the lowest responsive bidder shall be determined based on the combined total of Schedules A and B.

SCHEDULE A - Franklin/McVay Sanitary Sewer Extension

Bid Items:

Item No.	Description	Approx. Quantity	Per	Unit Price	Total Price Extension
A-0006	Internal Sewer Video Inspection	1	LS	$	$
A-0046	Potholing for Fiber Optic Within the UPRR Right-of-Way	1	LS	$	$
A-0058	Contaminated Soil Excavation and Disposal	50	CY	$	$
A-0058a	Contaminated Groundwater Mitigation	1,000	GAL	$	$
A-0060	Mobilization, Demobilization, Bonds and Insurance	1	LS	$	$
A-0064	Erosion Control	1	LS	$	$
A-0061	Temporary Traffic Control	1	LS	$	$
A-0069	General Surface Restoration	1	LS	$	$
A-0072	Cold Plane Pavement Removal – 2-Inch Depth	3,800	SY	$	$
A-0072a	Cold Plane Pavement Removal – 0-Inch to 2-Inch Depth	2,050	SY	$	$
A-0073	Trench Foundation Over Excavation and Subgrade Stabilization	50	CY	$	$

Item No.	Description	Approx. Quantity	Per	Unit Price	Total Price Extension
A-0076	Trench Rock Excavation	300	CY	$	$
A-0121	Reinforced Concrete Commercial Driveway Apron	160	SY	$	$
A-0121a	Transition Behind Concrete Driveway	250	SY	$	$
A-0126	Asphalt Approach	21	EA	$	$
A-0132	Remove and Replace Existing Standard Concrete Curb and Gutter	680	LF	$	$
A-0142	Truncated Domes for Handicap Ramps	4	EA	$	$
A-0148	Remove and Replace Existing Concrete Sidewalk	500	SY	$	$
A-0197	Saw-Cutting Existing Surfacing - Saw-Cut First 4-Inch Depth	16,000	LF	$	$
A-0197a	Saw-Cutting Existing Surfacing - Saw-Cut per Inch Depth Beyond First 4 Inches	128,000	IN-LF	$	$
A-0257	Furnish and Install 8-Inch Diameter ASTM D3034 SDR 26 PVC Sewer Pipe	540	LF	$	$
A-0261	Furnish and Install 18-Inch Diameter ASTM F679 PS115 PVC Sewer Pipe	4,080	LF	$	$
A-0277	Furnish and Install New 48-Inch Diameter Sanitary Sewer Manholes (0 to 10 Feet Deep)	15	EA	$	$
A-0277a	Additional Depth of 48-Inch Diameter Manholes Beyond 10 Feet Deep	75	FT	$	$
A-0278	Furnish and Install New 60-Inch Diameter Sanitary Sewer Manholes (0 to 10 Feet Deep)	1	EA	$	$
A-0278a	Additional Depth of 60-Inch Diameter Manholes Beyond 10 Feet Deep	1	FT	$	$
A-0279	Furnish and Install New 72-Inch Diameter Sanitary Sewer Manholes (0 to 10 Feet Deep)	1	EA	$	$
A-0279a	Additional Depth of 72-Inch Diameter Manholes Beyond 10 Feet Deep	7	FT	$	$
A-0279b	Furnish and Install Outside Drop Structure at Manholes	1	EA	$	$
A-0360	Manhole Frame and Cover Adjustment (New and Existing)	13	EA	$	$

Item No.	Description	Approx. Quantity	Per	Unit Price	Total Price Extension
A-0542	Hot Mix Asphaltic Concrete (HMAC)Trench Pavement, 2-Inch Overlay and 2-Inch Inlay, Level 3, ½-Inch Dense Pavement Restoration	4,500	TON	$	$
A-0587	Hand Railing	122	LF	$	$
A-0617	Permanent Pavement Striping and Marking	1	LS	$	$
A-0861	Control Density Fill (CDF) Trench Backfill	500	CY	$	$
Schedule A Bid Item Total:				**$**	

SCHEDULE B - Springfield Utility Board Waterline and Electrical Facilities

Bid Items:

Item No.	Description	Approx. Quantity	Per	Unit Price	Total Price Extension
B-0007	Flushing/Testing/Chlorination	1	LS	$	$
B-0073	Trench Foundation Over Excavation and Subgrade Stabilization	10	CY	$	$
B-0076	Trench Rock Excavation	25	CY	$	$
B-0197	Saw-Cutting Existing Surfacing – Saw-Cut First 4-Inch Depth	850	LF	$	$
B-0197a	Saw-Cutting Existing Surfacing - Saw-Cut per Inch Depth Beyond First 4 Inches	3,400	IN-LF	$	$
B-0254	Furnish and Install 2-Inch and 4-Inch Conduit (Own Trench)	1,080	LF	$	$
B-0254a	Furnish and Install 2-Inch Conduit (Joint Trench With Water Line)	1,005	LF	$	$
B-0254b	Furnish and Install 4-Inch Conduit (Joint Trench With Water Line)	879	LF	$	$
B-0255	Furnish and Install UPRR Crossing (Electric)	1	LS	$	$
B-0706	Furnish and Install UPRR Crossing (Water)	1	LS	$	$
B-0707	Furnish and Install 16-Inch Ductile Iron Pipe	342	LF	$	$

Item No.	Description	Approx. Quantity	Per	Unit Price	Total Price Extension
B-0708	Furnish and Install 16-Inch Butterfly Valve	5	EA	$	$
B-0709	Furnish and Install 16-Inch 90 Degree Bend	2	EA	$	$
B-0710	Furnish and Install/Removal of 1-Inch Temporary Chlorination Point	1	EA	$	$
B-0711	Furnish and Install 16-Inch x 2-Inch Plug	1	EA	$	$
B-0712	Furnish and Install 16-Inch x 2-Inch Cap	1	EA	$	$
B-0713	Furnish and Install 6-Inch Flush Point	1	EA	$	$
B-0714	Furnish and Install 16-Inch x 16-Inch Tee	1	EA	$	$
B-0861	Control Density Fill (CDF) Trench Backfill	108	CY	$	$
Schedule B Bid Item Total:				**$**	

Schedule C - Additive Alternate – Work associated with the new sewer main on East 19th Ave., Station A0+00 to A9+73 and the modifications to the Nugget Way pump station and force main are included as an Additive Alternate.

Bid Items:

Item No.	Description	Approx. Quantity	Per	Unit Price	Total Price Extension
C-0006	Internal Sewer Video Inspection	1	LS	$	$
C-0058	Contaminated Soil Excavation and Disposal	15	CY	$	$
C-0058a	Contaminated Groundwater Mitigation	250	GAL	$	$
C-0064	Erosion Control	1	LS	$	$
C-0061	Temporary Traffic Control	1	LS	$	$
C-0069	General Surface Restoration	1	LS	$	$
C-0072a	Cold Plane Pavement Removal – 0-Inch to 2-Inch Depth	1,100	SY	$	$

Item No.	Description	Approx. Quantity	Per	Unit Price	Total Price Extension
C-0073	Trench Foundation Over Excavation and Subgrade Stabilization	15	CY	$	$
C-0076	Trench Rock Excavation	50	CY	$	$
C-0126	Asphalt Approach	6	EA	$	$
C-0197	Saw-Cutting Existing Surfacing - Saw-Cut First 4-Inch Depth	3,720	LF	$	$
C-0197a	Saw-Cutting Existing Surfacing - Saw-Cut per Inch Depth Beyond First 4 Inches	14,880	IN-LF	$	$
C-0251	Modifications to Nugget Way Pump Station and Force Main	1	LS	$	$
C-0256	Furnish and Install 6-Inch Diameter ASTM D3034, SDR 35 PVC Sewer Laterals	45	LF	$	$
C-0259	Furnish and Install 12-Inch Diameter ASTM D3034 SDR 26 PVC Sewer Pipe	933	LF	$	$
C-0277	Furnish and Install New 48-Inch Diameter Sanitary Sewer Manholes (0 to 10 Feet Deep)	4	EA	$	$
C-0277a	Additional Depth of 48-Inch Diameter Manholes Beyond 10 Feet Deep	1	FT	$	$
C-0278	Furnish and Install New 60-Inch Diameter Sanitary Sewer Manholes (0 to 10 Feet Deep)	1	EA	$	$
C-0360	Manhole Frame and Cover Adjustment (New and Existing)	5	EA	$	$
C-0457	6-Inch x 12-Inch x 12-Inch ASTM D3034 Tee	2	EA	$	$
C-0542	Hot Mix Asphaltic Concrete (HMAC) Trench Pavement, 2-Inch Overlay, Level 3, ½-Inch Dense Pavement Restoration	900	TON	$	$
C-0617	Permanent Pavement Striping and Marking	1	LS	$	$
Schedule C Bid Item Total:				**$**	
Total Combined Bid Amount (Schedules A + B + C)				**$**	

Terms, Declarations and Bid Submittal

Bidder's Understanding

Bidders shall determine for themselves all the conditions and circumstances affecting the projected cost of the proposed work by personal examination of the site, Contract documents, and by such other means they may deem to be necessary. It is understood and agreed that in the event the City has obtained information from data at hand regarding underground or other conditions or obstructions depicted in the Contract documents, there is no expressed or implied agreement that such conditions are fully or correctly shown, and

the Bidder must take into consideration the possibility that conditions affecting the cost or quantity of work may differ from those indicated.

The Bidder is familiar with and is satisfied as to all federal, state and local laws and regulations that may affect cost, progress, and performance of the work.

Bid

The undersigned Bidder having examined the Specifications and Contractual Documents and having satisfied themselves as to all conditions to be encountered, hereby proposes to furnish all labor, material and equipment and perform all work necessary to complete Project No P21080 in accordance with this bid, the Contract Plans, City of Springfield Standard Construction Specifications, 1994 Edition, and all subsequent modifications, the Special Provisions, and all other Contractual Documents at the prices and on the terms herein contained.

The unit price bids are submitted with the understanding that the quantities stated are approximate and are given only as the basis of calculation for comparison of bids and determining that the unit prices are balanced and that final payment for all unit price bid items will be based on actual quantities.

It is understood that in the instance of a discrepancy between the unit price and the extension (total price extension) the unit price shall govern. The extension shall be determined by multiplying the unit price by the number of units (approximate quantity).

Bid Guarantee

As required by ORS 279C.365(4) each bid shall be accompanied by a Bid Bond, cash, or a certified or cashier's check written upon a bank in good standing and in a form acceptable to the City, payable to the Finance Director of the City of Springfield, Oregon, in an amount equal to at least 10 percent of the total amount of the Bid. Bid Bonds shall be issued by a surety company registered to issue bonds in the State of Oregon, and utilizing a bond form acceptable to the City. The City will accept AIA Document A310-2010. The Bid Bond may not be altered.

Such Bid Guarantee shall be forfeited and become the property of the City in case the Bidder shall fail or neglect to furnish a satisfactory Performance and/or Payment Bond issued by a viable bond company acceptable to the City as required by ORS 279C.380 and to execute the Contract within ten (10) days (Saturday, Sunday, and holidays excepted) after receiving Contract from the City for execution. For information regarding Performance and Payment Bond requirements see City of Springfield Contract document, Section 5. City Bonding.

Bid Acceptance Period

This bid will remain subject to acceptance for a period of 60 days after the bid opening, or for such longer period of time that the Bidder may agree to in writing upon request of the City.

Liquidated Damages

The City of Springfield and the Contractor agree that; (a) the amounts so fixed are reasonable forecasts of just compensation for the harm that is caused by the breach; (b) the harm that is caused by the breach is one that is incapable of or very difficult of accurate estimation; and, (c) the amount so fixed is not fixed as a penalty to coerce performance of the Contract but is rather intended to be a genuine pre-estimation of injury to the City of Springfield in lieu of performance within the contract time by the Contractor.

a. Delay

It is agreed by the City of Springfield and by the Contractor that the need exists for a damage provision in the event the Contractor fails to complete the work within the Contract time specified, or any extension thereof, by the City of Springfield. The City of Springfield and the Contractor further agree that the Contractor shall be liable to the City of Springfield for fixed, agreed and liquidated damages for each and every calendar day of delay in the amounts as follows: $700.00 per day for failure to complete all work specified to be complete by September 29, 2014 in the Contract Time of Completion section which follows; $1,100.00 per day for failure to complete all work specified to be complete by September 30,

2015 in the Contract Time of Completion section which follows, in accordance with Subsection 108.07 of the Standard Construction Specifications.

b. <u>Failure to Report Spills</u>
The Contractor also agrees to liquidated damages in the amount of $500.00 per incident for failure to report sewage spills plus an amount sufficient to reimburse the City for any civil and administrative penalties paid by the City as a result of the Contractor's failure to report. Failure to report sewage spills may subject the City to (1) civil penalties of up to $32,500.00 per day of violation pursuant to Section 309(d) of the Clean Water Act, 33 U.S.C. § 1319(d); (2) administrative penalties of up to $11,000.00 per day for each violation, pursuant to Section 309(g) of the Clean Water Act, 33 U.S.C. § 1319(g); or (3) civil action in federal court for injunctive relief pursuant to Section 309(b) of the Clean Water Act, 33 U.S.C. § 1319(b).

<u>Contract Time of Completion</u>
The Contractor shall not begin work under this bid until written Notice to Proceed has been received. The Contractor shall complete the work under this bid as follows: To be completed by September 29, 2014 – All work from near the intersection of Franklin Boulevard and McVay Highway (Station 0+80) to and including the ADA ramps at the intersection of McVay Highway and E. 19th Avenue, including the sewer manhole located within E. 19th Avenue (Station A0+58) and the Springfield Utility Board's waterline and electrical facilities. To be completed by September 30, 2015 – Completion of the project with a fully functional system. The actual commencement of work will begin within ten days after the date of the Notice to Proceed, or such other starting date as is fixed by the Notice to Proceed. No work will be allowed from September 30, 2014 to June 14, 2015 without prior approval from the City.

The Contractor shall apply for any extensions of time as specified in Subsection 108.06 of the Standard Construction Specifications.

<u>Certifications</u>
The undersigned hereby certifies that:

1.) If awarded the Contract, that they shall fully comply with all provisions regarding the prevailing wage rates as required by ORS 279C.800 to 279C.870 and/or 40 U.S.C. 2762 as applicable.

2.) The Contractor, Subcontractor, suppliers of materials or services, and others engaged by the contractors, shall comply at all times with and observe all such laws, ordinances, regulations, orders, and decrees; and shall hold harmless and indemnify the City of Springfield and its representatives against any claim or liability arising from or based on the violation of any such law, ordinance, regulation, order, or decree.

3.) In accordance with ORS 279C.505, the Contractor will;

   a) Make payment promptly, as due, to all persons supplying to the Contractor labor or material for the performance of the work provided for in the Contract.

   b) Promptly pay all contributions or amounts due the State Industrial Accident Fund, or private carrier of accident insurance, from such Contractor or Subcontractor incurred in the performance of the Contract. If a private carrier is used, the Contractor shall notify the Engineer as to the carrier's name and address before commencement of work.

   c) Not permit any lien or claim to be filed or prosecuted against the state or a county, school district, municipality, municipal corporation or subdivision thereof, on account of any labor or material furnished.

   d) Pay to the Department of Revenue all sums withheld from employees under ORS 316.167.

   e) Have an employee drug testing program in place at the time of signing the contract and will maintain such drug testing program in place over the life of the Contract.

4.) In accordance with ORS 279C.530, the Contractor will;

a) Promptly, as due, make payments to any person, co-partnership, association or corporation, furnishing medical, surgical, and hospital care or other needed care and attention, incidental to sickness or injury, to the employees of such Contractor, of all sums which the Contractor agrees to pay for such services and all monies and sums which the Contractor:

1. May or shall have deducted from the wages of his employees for such services pursuant to the terms of Oregon Revised Statutes and any contract entered in pursuant thereto; or
2. Collected or deducted from the wages of his employees pursuant to any law, contract, or agreement for the purpose of providing or paying for such service; and
3. All employers working under the Contract are either employers that will comply with ORS 656.017 or employers that are exempt under ORS 656.126.

5.) They have not, and will not, discriminate against a Subcontractor in the awarding of a subcontract because the Subcontractor is a minority, women or emerging small business enterprise certified under ORS 200.055 as required by ORS 279A.110.

6.) No Contractor, Subcontractor or any firm, corporation, partnership or association in which the Contractor or Subcontractor has a financial interest who appears on the *List of Contractors Ineligible to Receive Public Works Contracts*, as established by the Bureau of Labor and Industries, will perform work under this Contract, as specified in ORS 279C.860.

7.) No Contractor, Subcontractor or any firm, corporation, partnership or association in which the Contractor or Subcontractor has a financial interest who appears on the Construction Contractor's Board *Not Qualified to Hold Public Contracts* list, will perform work under this Contract, as specified in ORS 701.227(4).

8.) The Contractor shall have a current, valid certificate of registration issued by the Construction Contractor's Board as defined in ORS 701.005(2) and/or a valid landscape contractor's license as defined in ORS 671.520(2) by the State Landscape Contractor's Board, as applicable, in place at the time the bid is presented.

9.) All Subcontractors shall have a current, valid certificate of registration issued by the Construction Contractor's Board as defined in ORS 701.005(2) and/or a valid landscape contractors license as defined in ORS 671.520(2) by the State Landscape Contractor's Board, as applicable in place prior to performing any work under the Contract.

10.) The Contractor shall function as an independent contractor for the purposes of this Contract and shall not be considered an employee of the City of Springfield for any purpose. The Contractor shall assume sole responsibility for any debts or liabilities that may be incurred by the Contractor in fulfilling the terms of this Contract and shall be solely responsible for the payment of all federal, state, and local taxes which may accrue because of this Contract.

Bid Addenda

All Addenda issued are considered to be part of the specifications of the Invitation to Bid and, as such, are as incorporated into the Contract as specified in Section 104.02 of the Standard Construction Specifications.

By signing below, I acknowledge the receipt of the following Addenda documents and certify that the specifications contained in each have been considered and incorporated into the bid as presented. All Addenda must be included with the bid submitted.

Addenda Number	Addenda Date

Declarations

The undersigned Bidder declares that the only persons or parties interested in the bid are those named herein, that this bid is, in all respects, fair and without fraud, that it is made without collusion with any official of the City, and that the bid is made without any connection or collusion with any person submitting another bid on this project.

I have read, fully understand, and agree that as Bidder I, and all Subcontractors, will comply with all of the terms and conditions of the contract for which this bid is presented. By signing below I attest that I am an officer or a duly authorized representative of the business listed below and that I possess the legal authority to submit this bid for consideration.

Bidder's Signature _____

Bidder's Name *(Please Print)* _____

Title _____

Business Name _____

Business Address _____

City _____ State _____ Zip _____

Phone Number _____ Cell Phone _____

E-mail Address _____ Fax Number _____

Date _____

The award of this Contract shall be made to the responsible Bidder with the lowest responsive bid.

PREVAILING WAGE RATE INFORMATION

Prevailing Wage Rates information can be found at the following website:

http://www.oregon.gov/boli/WHD/PWR/Pages/pwr_oregon_2014.aspx

For the proper Prevailing Wage Rates applicable to this project please refer to the following publications:

1.) *Prevailing Wage Rate Publication; Prevailing Wage Rates for Public Works Contracts in Oregon (subject only to state law) and State Apprenticeship Rates with an effective date of January 1, 2014.*

2.) *The following Amendments to the Prevailing Wage Rates for Public Works Contracts in Oregon also apply;*

   a.) *April 1, 2014 Amendments*

CITY OF SPRINGFIELD

Special Provisions

for

P 21080
FRANKLIN/MCVAY SANITARY SEWER EXTENSION

Engineering Concurrence

The Managing Engineer for the City of Springfield concurs with the preparation of the plans and specifications, and further concurs with advertising this project for quotes.

Jeffrey A. Paschall, P.E.

Date 5/7/14

SPECIAL PROVISIONS

References to number of Divisions, Section, Sub-Section and the like shall mean the 1994 Edition of the Standard Construction Specifications, including all Addenda, Standard Drawings, and other Contractual Documents of the City of Springfield, Lane County, Oregon.

These Special Provisions supplement and amplify certain sections of the City of Springfield, Oregon, Standard Construction Specifications. The Standard Construction Specifications shall apply except as modified herein. These Special Provisions and additional technical specifications may contain occasional requirements not pertinent to the project. However, these specifications shall apply in all particulars insofar as they are applicable to this project.

SECTION A – General Requirements

P 21080 FRANKLIN/MCVAY SANITARY SEWER EXTENSION

A1.1 Applicable Standard Specifications

The 1994 Edition of the Standard Construction Specifications of the City of Springfield, Oregon, Standard Construction Specifications (including all revisions at date of bid opening), shall apply to this Invitation to Bid and construction contract except as they may be modified herein. In the case of discrepancy or contradiction, unless noted otherwise herein, the more restrictive provisions shall apply.

A1.2 Form of Proposal

REPLACE SECTION 102.02 "FORM OF PROPOSAL" OF THE STANDARD CONSTRUCTION SPECIFICATIONS:

"The Proposal and the proposal guarantee in the form of a bid bond, certified check, or cashier's check, shall be enclosed in a sealed, labeled and addressed envelope, as required in the Instructions to Bidders and filed as required therein. The outside of the envelope shall plainly identify: (1) The project name and (2) The bid opening date.

All Proposals must be clearly and distinctly typed or written with ink or indelible pencil.

All Proposals shall be on the form furnished by Owner, and in addition to necessary unit price items and total prices in the column of totals to make a complete Bid, all applicable blanks giving general information must be filled in and the Bids signed by an officer or duly authorized representative of the Bidder. Any statement accompanying and tending to qualify a Bid may cause rejection of such Bid, unless such statement is required, in a Proposal embracing alternate Bids. All bid documents except plans must be returned with the Bid.

Unless otherwise specified, Bidders shall bid on all Bid items included in the Proposal, and the low Bidder shall be determined as noted in Subsection 103.01 AWARD OF CONTRACT. Except as provided herein Proposals which are incomplete or fail to comply to all items required in the Proposal may be rejected."

INSERT IN ITS PLACE THE FOLLOWING:

"ALL BID DOCUMENTS, EXCEPT PLANS, MUST BE RETURNED WITH THE BID. This includes all documents contained in the original bid book, whether they require the completion of

information or not, and any addendum that may be issued pertaining to the bid in question. The only exceptions to this are any plans or drawings, which are not required to be submitted as a part of your Bid.

The Bid Submittal, Bid Bond, Certified Check, or Cashier's Check shall be enclosed in a sealed and labeled envelope. The outside of the envelope shall plainly identify: (1) The project name and project number and (2) The Bid opening date. All Bids must be clearly and distinctly typed or written with ink or indelible pencil. Unless otherwise specified, Bidders shall bid on all Bid items, and must include in their Bid prices the entire cost of each item of work set forth in the Bid.

Sealed Bids shall be addressed to and received at the Office of the Finance Director, City Hall, 225 Fifth St. Springfield, Oregon, 97477 at, or before, the time and date noted on the Invitation to Bidders, after which time the Bids will be publicly opened and read aloud.

All Bids shall be on the form furnished by the City, and in addition to necessary unit price items and total prices in the column of totals to make a complete Bid, all applicable blanks giving general information must be filled in and the Bids signed by an officer or duly authorized representative of the Bidder. The only exceptions to this requirement are the Performance Bond, Payment Bond, Statutory Public Works Bond and the Contract documents which are provided here as a reference. However, if you are awarded the Bid, you will be required to submit fully executed copies of these documents upon request. Any statement accompanying and tending to qualify a Bid may cause rejection of such Bid, unless such statement is required in a Bid embracing alternate Bids.

If, in the opinion of the City, the items or prices in any Bid appear unbalanced, incomplete, or fail to comply with all the terms required, the Bid may be rejected."

A1.3 Proposal Guaranty and Organization

REPLACE SECTION 102.05 "PROPOSAL GUARANTY AND ORGANIZATION" OF THE STANDARD CONSTRUCTION SPECIFICATIONS:

"Each Bid must be accompanied by a Bid Bond, cash or a certified or cashier's check upon a bank in good standing, payable to the Finance Director of the City of Springfield, Oregon, in an amount equal to at least 10% of the total amount of the bid. Such Proposal guaranty shall be forfeited and become the property of the City in case the Bidder shall fail or neglect to furnish a satisfactory Performance Bond and Payment Bond and to execute the Contract within 10 days (Saturday, Sunday and holidays excepted) after receiving said Contract from the City for execution. Bid bonds submitted shall be on the form provided by the City in the Bid document."

INSERT IN ITS PLACE THE FOLLOWING:

"As required by ORS 279C.365(4) each Bid shall be accompanied by a Bid Bond, cash, or a certified or cashier's check written upon a bank in good standing and in a form acceptable to the City, payable to the Finance Director of the City of Springfield, Oregon, in an amount equal to at least 10 percent of the total amount of the Bid. Bid Bonds shall be issued by a surety company registered to issue bonds in the State of Oregon, and utilizing a bond form acceptable to the City. The City will accept AIA Document A310-2010 Bid Bond (sample form enclosed). The Bid Bond may not be altered.

Such Bid Guarantee shall be forfeited and become the property of the City in case the Bidder shall fail or neglect to furnish a satisfactory Performance and/or Payment Bond issued by a viable bond company acceptable to the City as required by ORS 279C.380 and to execute the Contract within ten (10) days (Saturday, Sunday, and holidays excepted) after receiving Contract from the

City for execution. For information regarding Performance and Payment Bond requirements see City of Springfield Contract document, Section 5. City Bonding."

A1.4 Addenda to Contract Documents

REPLACE SECTION 102.08 "ADDENDA TO CONTRACT DOCUMENTS" OF THE STANDARD CONSTRUCTION SPECIFICATIONS:

"Any addenda issued by the Owner, which may include changes, corrections, additions, interpretations, or information, and issued 48 hours or more before the scheduled closing time for filing the Bids, Saturday, Sunday and legal holidays not included, shall be binding upon the Bidder. Owner shall supply copies of such addenda to all Contractors who have obtained copies of the Contract Documents for the purposes of bidding thereon. Failure of the Contractor to receive or obtain such addenda shall not excuse him from compliance therewith, if he is awarded the Contract."

INSERT IN ITS PLACE THE FOLLOWING:

"Any addenda issued by the City, which may include changes, corrections, additions, interpretations, or information issued 72 hours or more before the scheduled closing time for filing the Bids shall be binding upon the Bidder. Addenda will be posted to the City's website at www.springfield-or.gov/DPW/InvitationBid.htm. The Contractor should check the website frequently for new postings during the open quote period. The City shall make a reasonable effort to notify all individuals, firms, and corporations listed on the Plan Holders List and those individuals that attended the Pre-Bid Meeting and provided contact information on the sign-in sheet when addenda are issued. Failure of the Contractor to receive or obtain such addenda shall not excuse them from compliance, if they are awarded the Contract."

A1.5 Insurance

REPLACE SECTION 107.06 "INSURANCE" OF THE STANDARD CONSTRUCTION SPECIFICATIONS:

The Contractor shall provide and maintain general liability, auto liability, property, and workers' compensation insurance for life of this Contract.

General Liability Insurance
The Contractor shall maintain an ISO Commercial General Liability insurance policy (or an equivalent policy approved by Owner) with combined single limits of at least $1,000,000 per occurrence for bodily injury, personal injury, and property damage and an aggregate limit of a least $2,000,000. The policy shall include coverage for contractual liabilities.

Comprehensive Automobile Liability Insurance
The Contractor shall maintain an automobile liability insurance policy with combined single limits of at least $1,000,000 per occurrence for bodily injury, personal injury, and property damage.

Additional Insured Endorsement
The general and automobile insurance policies specified above shall include endorsements naming as an additional insured "the City of Springfield, its agents, employees and officials all while acting within their official capacity as such."

Property Insurance
Depending on the nature of the construction contemplated under this contract, Owner may require Contractor to provide property insurance. Refer to Special Provisions section of this Contract.

Workers' Compensation Insurance
Contractor, its subcontractors, if any, and all employers working under this agreement are subject employers under the Oregon Workers' Compensation Law and shall comply with ORS 656.017, which requires them to provide workers' compensation coverage for all their subject workers.

Contractor is responsible for maintaining workers' compensation insurance for his employees and assuring that his subcontractors, if any, also maintain workers' compensation insurance. Contractor shall defend, indemnify, and hold Owner harmless from any liability for any workers' compensation claims costs, fines, or costs whatsoever arising from Contractor's or his subcontractors' failure to comply with ORS 656.017.

Additional Policies and Special Coverages
Refer to the Special Provisions section of this Contract for additional coverages that may be required.

Certificates of Insurance
Certificates of insurance evidencing all policies required by this Contract shall be delivered to the Owner prior to the commencement of any work. All certificates shall include a 30-day notice of cancellation clause and required additional insured endorsements. The Owner has the right to reject any certificate for unacceptable coverage and/or companies.

INSERT IN ITS PLACE THE FOLLOWING:

"INSURANCE

All insurance shall be approved by the City as to terms, conditions and form prior to beginning work.

Public Liability and Property Damage

The Contractor shall maintain in force for the duration of this Contract a Commercial General Liability insurance policy written on an occurrence basis with limits not less than $2,000,000 per occurrence and $3,000,000 in the aggregate. The policy will be endorsed with a "per project" aggregate endorsement and shall include Products and Completed Operations coverage. Automobile Liability (owned, non-owned, and hired) insurance with limits not less than $1,000,000 per occurrence shall be maintained. The City, its employees, officials and agents will be named as Additional Insured's where operations are being conducted related to this Contract on the General and Automobile Liability policies as respects to work or services performed under this agreement to the extent that the death or bodily injury to persons or damage to property arises out of the fault of the Contractor or the fault of the Contractor's agents, representatives or subcontractors. The following statement will appear on the face of the certificate; "The City, its employees, officials and agents are all named as additional insured while acting in their capacity as such." The City's additional insured status for Products and Completed Operations hazards shall extend for at least one year beyond the City's acceptance of the project. This insurance shall be primary and shall be paid and applied first in its entirety prior to any application of insurance the City may carry on its own.

Workers' Compensation

The Contractor shall provide and maintain Workers' Compensation coverage with limits no less than $500,000 for it employees, officers, agents, or partners, as required by applicable Workers' Compensation laws. If the Contractor is exempt from this coverage a written statement, signed by the Contractor, explaining the reason for the exemption will be provided to the City prior to commencement of any work.

Course of Construction and/or Installation Floater

The Contractor shall maintain in full force for the duration of this contract an All Risk insurance policy approved by the City as to terms, conditions and form covering the replacement cost of the work during the course of construction. The policy shall include the interests of the City and Architect/Engineer, as applicable, and the first two layers of Subcontractors. The amount of insurance shall equal the completed value of the Contract. The City, at its option, may elect to supply this coverage.

Asbestos Abatement (only applicable to Asbestos Specific Contracts)

If applicable to this Contract, the Contractor shall maintain in full force a Commercial General Liability policy approved by the City as to terms, conditions and form that is Asbestos Specific with a minimum limit of $2,000,000 per occurrence and $3,000,000 in the aggregate written on a form that meets the following criteria:

a. A full occurrence form, or
b. A limited occurrence form with at least a three-year (3) tail, or
c. A claims made form with a three-year (3) tail.

Pollution Liability Coverage (only applicable to Pollution Specific Contracts)

If applicable to this Contract, the Contractor shall maintain in full force a Commercial General Liability policy approved by the City as to terms, conditions and form that is Pollution Specific with a minimum limit of $2,000,000 per occurrence and $3,000,000 in the aggregate written on a form that meets the following criteria:

a. A full occurrence form, or
b. A limited occurrence form with at least a three-year (3) tail, or
c. A claims made form with a three-year (3) tail.

Professional Liability Coverage (only applicable to Contracts if specified)

If Professional Liability insurance is required, the City must approve the terms, conditions and limits prior to commencement of any work.

Additional Policies and Special Coverages

Refer to the Special Provisions section of this Contract for additional coverages that may be required.

Subcontractors

The Contractor shall require all Subcontractors to provide and maintain General Liability, Auto Liability and Workers' Compensation insurance and, as applicable, Professional, Asbestos and Pollution Liability with coverage's equivalent to those required of the General Contractor in this Contract. The Contractor shall require certificates of insurance from all Subcontractors as evidence of coverage.

Additional Insured Endorsement

All certificates of insurance, with the exception of Professional Liability and Railroad Protective Liability, must include an endorsement which lists the City of Springfield as a named additional insured. The following statement will appear on the face of the certificate; "The City, its

employees, officials and agents are all named as additional insured while acting in their capacity as such."

Evidence of Coverage and Notice of Cancellation or Material Change in Coverage

Evidence of the required coverages issued by a company satisfactory of the City shall be provided to the City by way of a certificate of insurance before any work or services commence. A 30-day notice of cancellation or material change in coverage clause shall be included.

If the approved insurance company will not provide this 30 day notice, it shall be the responsibility of the Contractor to provide written notice to the City within two (2) days of the Contractor becoming aware that their coverage has been cancelled or materially changed. The Contractor shall e-mail notification directly to Bob Duey, Finance Director at rduey@springfield-or.gov. Regardless of the circumstances causing the Contractor's insurance coverage to cease or be modified, it is the Contractor's responsibility to notify the City as described above.

Failure to maintain the proper insurance or provide notice of cancellation or material change shall, at the City's option, be grounds for immediate termination of this Contract.

_____
(Contractor initials)

Equipment and Material

The Contractor shall be responsible for any loss, damage, or destruction of its own property, equipment, and materials used in conjunction with the work."

A1.6 Submission of Certified Payroll

REPLACE THE 2ND PARAGRAPH OF SECTION 109.07 OF THE STANDARD CONSTRUCTION SPECIFICATIONS:

Once before the first payment and each time the prevailing wage rates change, and once before final payment is made, Contractor shall supply and file with Owner a statement in writing under oath, in form prescribed by the State Labor Commission and which conforms with ORS Chapter 279, certifying the hourly rate of wages paid each classification of workman not exempt by statute who is employed upon such project and further certifying that no workman employed has been paid less than minimum prevailing wage rate. Each Subcontractor who performed work on the project during the period covered by the payment may be required to file with Owner a similar statement which covers its workmen.

INSERT IN ITS PLACE THE FOLLOWING:

It shall be the responsibility of the Contractor and any subcontractors to submit certified payroll statements to the City as to the wage rates paid to each worker as follows:

As specified in ORS 279C.845, the Contractor or the Contractor's surety and every Subcontractor or the Subcontractor's surety shall file certified statements with the public agency in writing, on a form prescribed by the Commissioner of the Bureau of Labor and Industries, certifying the hourly rate of wage paid each worker whom the Contractor or the Subcontractor has employed upon the public works, and further certifying that no worker employed upon the public works has been paid less than the prevailing rate of wage or less than the minimum hourly rate of wage specified in the Contract. The certificate and certified statement shall be verified by the oath of the Contractor or the Contractor's surety or Subcontractor or the Subcontractor's surety that the Contractor or Subcontractor has read the certified statement and certificate and knows the contents thereof and that the same is true to the Contractor or Subcontractor's knowledge. Certified statements (also referred to as certified payroll reports) shall be submitted to the City

no later than the 5th day of the following month for which the certified statement and certificate are being presented, regardless of whether any actual work is performed on the project or not. This information must be submitted to the City and also retained by the Contractor and Subcontractor(s) for three years.

Contracting agencies and general contractors are required to withhold 25% of amounts to Contractors if certified payrolls are not filed by the Contractor as required for work performed on projects subject to the prevailing wage rate law. Failure of Contractors to comply with the certified payroll filing requirements of the law, therefore, will result in a negative fiscal impact to those Contractors of up to 25% of their amount owed.

Each worker employed in the performance of this contract, either by the Contractor or Subcontractor or other person doing or contracting to do or contracting for the whole or any part of the work of the contract, must be paid not less than the specified minimum hourly rate of wage in accordance with ORS 279C.838 and 279C.840.

A1.7 Progress Payment

REPLACE THE 6TH PARAGRAPH OF SECTION 109.07 OF THE STANDARD CONSTRUCTION SPECIFICATIONS:

Progress payment will be made by the Owner on a monthly basis no later than the 20th day of the subsequent month of work performed, except that, additional days may be required when a payment is accompanied by one or more of the following: an extension of completion time, change order or extra bill. Payment may be made via use of checks or warrants at the option of the Owner for the amount of the approved estimate, less retainage.

INSERT IN ITS PLACE THE FOLLOWING:

"Progress payment will be made by the City on a monthly basis in the month subsequent to the work being performed, except that additional days may be required when the Contractor fails to submit complete and accurate certified payroll reports which are in compliance with ORS279C.845 when due, or a payment is accompanied by one or more of the following: an extension of completion time, change order or bill. If the Contractor fails to submit acceptable certified payroll reports when due, or one or more of the previously stated exceptions apply, the progress payment may be made up to fourteen (14) days after the date the certified payroll or other required information in question is received by the City.

The scheduled release of payment will depend upon the method of payment selected by the Contractor. If the Contractor elects to receive payment by check, payment will be released no later than the 20th day of the month. If the Contractor elects to receive payment by electronic Automated Clearing House (ACH) transfer, the funds will be transferred no later than the fourth Friday of the month. City will endeavor to honor Contractor's election to receive payment by ACH transfer, however, City reserves the right to make payment via use of check at the sole discretion of the City."

A1.8 Oregon Products

Contractor's attention is directed to the provisions of Oregon Law, ORS 279A.120 regarding the preference for products that have been manufactured or produced in Oregon. Contractor shall use Oregon-produced or manufactured materials with respect to common building materials such as cement, sand, crushed rock, gravel, plaster, etc., and Oregon-manufactured products in all cases where price, fitness, availability and quality are otherwise equal.

A1.9 Salvage and Debris

Unless otherwise indicated on the drawings or in the specifications, all castings, pipe, equipment, demolition debris, fences, trees, shrubs, spoil or any other discarded material or equipment shall become the property of the Contractor and shall be salvaged or disposed of in a manner compliant with applicable Federal, State and local laws and regulations governing disposal of such waste products. No burning of debris or any other discarded material will be permitted. The Contractor shall perform any demolition for the completion of this project and shall salvage and recycle all construction and demolition debris as is feasible and cost effective, in accordance with ORS 279C.510.

A1.10 Brand Name or Equal Specification

Brand Name or Equal Specification means a specification that uses one or more manufacturers' names, makes, catalog numbers or similar identifying characteristics to describe the standard of quality, performance, functionality or other characteristics needed to meet the contracting agency's requirements. The "Equal" product, component or process shall be the same or better than that named in function, performance, reliability, quality and general configuration. Determination of equal in reference to the project design requirements will be made by the Engineer, pursuant to Subsection 106.07. Unless otherwise specified, whenever a manufacturer's name brand or model is mentioned, it is to be understood that the phrase "approved equal" is assumed to follow thereafter, whether it does in fact or not. Such specification authorizes Contractors to offer goods or services that are equivalent or superior to those brands named or described in the specification.

END OF SECTION

TECHNICAL SPECIFICATIONS

FOR

CONSTRUCTION OF

FRANKLIN/MCVAY SANITARY SEWER EXTENSION
PROJECT NO. P21080

FOR

CITY OF SPRINGFIELD, OREGON

MAY 2014

Seal w/Signature REGISTERED PROFESSIONAL ENGINEER 17140 OREGON MAY 11, 1994 SUSAN M. GIERGA Susan M. Gierga RENEWS 12-31-14	Signing as the Professional of Record for the Special Provisions sections listed below: Sections B through M.

TECHNICAL SPECIFICATIONS

FOR

CONSTRUCTION OF

FRANKLIN/MCVAY SANITARY SEWER EXTENSION
PROJECT NO. P21080

FOR

CITY OF SPRINGFIELD, OREGON

MAY 2014

Seal w/Signature 	Signing as the Professional of Record for the Special Provisions sections listed below: Sections N through Q.

TECHNICAL SPECIFICATIONS

FOR

CONSTRUCTION OF

FRANKLIN/MCVAY SANITARY SEWER EXTENSION
PROJECT NO. P21080

FOR

CITY OF SPRINGFIELD, OREGON

MAY 2014

REGISTERED PROFESSIONAL ENGINEER 13742 OREGON JULY 16, 1987 GREGG H. SCHOLZ EXPIRES 6/30/2014 Gregg H. Scholz P.E. Apr 25 2014 10:23 AM CoSign	Signing as the Professional of Record for the Special Provisions sections listed below: Sections R through S.

TECHNICAL SPECIFICATIONS

FOR

CONSTRUCTION OF

FRANKLIN/MCVAY SANITARY SEWER EXTENSION
PROJECT NO. P21080

FOR

CITY OF SPRINGFIELD, OREGON

MAY 2014

Seal w/Signature	Signing as the Professional of Record for the Special Provisions sections listed below:
EXPIRES DECEMBER 31, 2014	Section T.

SPECIAL PROVISIONS

SECTION B – General Conditions

P21080 Franklin/McVay Sanitary Sewer Extension

B1. GENERAL

B1.1 Scope of Work

The work to be performed under these contract documents consists of the following:

Schedule A - Construction of approximately 4,000 linear feet of 18-inch diameter gravity sanitary sewer pipeline, approximately 5 to 20 feet deep, within the public right-of-way from the intersection of Franklin Blvd and the Franklin/McVay Highway to a location approximately 4,000 feet south of the intersection; 540 linear feet of 8-inch diameter PVC piping; fittings and appurtenances; manholes; connections to existing sanitary sewer systems, paving and striping; removal and replacement of existing sidewalk; surface restoration; and performance of additional and incidental work as called for by the project contract documents.

Schedule B - Approximately 350 linear feet of 16-inch DI waterline and electrical conduit ranging in size from 2-inch to 4-inch, including open trench installation of steel casings under the existing UPRR railroad trestle.

Schedule C (Additive Alternate) - Modifications to the existing Nugget Way sanitary sewage pump station and force main. Construction of approximately 900 linear feet of 12-inch diameter PVC gravity sanitary sewer pipeline, approximately 6 to 12 feet deep, within the public right-of-way from the intersection of Franklin/McVay Highway and 19th Avenue to the intersection of 19th Avenue and Nugget Way, fittings and appurtenances; manholes; paving and striping; surface restoration; and performance of additional and incidental work as called for by the project contract documents.

The above general outline of principal features of the work does not in any way limit the responsibility of the Contractor(s) to perform all work and furnish all equipment, labor and materials required by the contract documents.

No attempt has been made in these contract documents to segregate work covered by any trade or subcontract under one specification. Such segregation and establishment of subcontract limits will be solely a matter of specific agreement between the CONTRACTOR and its subcontractors and shall not be based upon any inclusion, segregation or arrangement in or of these specifications.

B1.2 Codes and Standards

All work shall be performed in accordance with the highest standard of practice in the industry and shall be furnished in conformance with all applicable codes, statutes or standards that apply to this work including, but not limited to, any applicable Federal, State or City of Springfield Codes, Standards and Ordinances.

B1.3 Permits and Licenses

The CONTRACTOR shall comply with all permit conditions, provisions and limitations. Such conditions and requirements are hereby made a part of these specifications, as fully and completely as though the same were fully set forth herein. The CONTRACTOR shall examine the permit(s) granted by any city, county, state and federal agencies. Failure to do so will not relieve the CONTRACTOR from compliance with the requirements stated therein.

The CONTRACTOR shall be responsible for payment of all fines, liability, and other damages resulting from regulatory enforcement action caused by CONTRACTOR's non-compliance with regulations or permit conditions. This responsibility shall apply to permit violations for any permit conditions, whether the permit is issued to the OWNER or the CONTRACTOR. The CONTRACTOR shall bear full responsibility for any work stoppages caused by violations of applicable regulations and permit conditions. No time extensions shall be granted due to such work stoppages, nor shall liquidated damages be waived due to same.

A. Lane County Facilities Permit – The OWNER will obtain a Lane County Facilities Permit for work within the East 19th Avenue right-of-way. Two weeks prior to closure of 19th Avenue, the CONTRACTOR shall install two signs on 19th Avenue notifying the public of the upcoming road closure. The signs shall include the closure times and dates. Coordinate with Lane County for sign placement and additional sign requirements. The CONTRACTOR shall contact Brad Lemhouse at Lane County (541-628-6928) two weeks prior to the planned closure.

B. Union Pacific Railroad (UPRR) Pipeline Crossing Permit – The OWNER and Springfield Utility Board (SUB) will obtain pipeline crossing permits from UPRR for this project. The work permitted includes the sewer, water and electrical utility installations and sidewalk construction within the UPRR right-of-way.

   The CONTRACTOR shall provide shoring plans for all proposed excavations within the UPRR right-of-way in accordance with the Guidelines for Temporary Shoring, October 25, 2004 which can be found at www.arema.org. Separate shoring plans may be required for the sewer, water and electrical installations. The CONTRACTOR shall be responsible to provide shoring plans prepared, stamped and signed by a Registered Professional Engineer, licensed in the State of Oregon, and who is familiar with railway loadings. Submit the shoring plans to UPRR for approval, as described in the Guidelines for Temporary Shoring. No work will be allowed within the UPRR right-of-way until UPRR approved shoring plans have been submitted to the ENGINEER.

   The OWNER and SUB will obtain the required UPRR insurances for this project.

C. Department of Environmental Quality (DEQ) 1200-CA National Pollutant Discharge Elimination System (NPDES) Permit – The OWNER has obtained a DEQ 1200-CA NPDES permit for the work. This permit establishes requirements for stormwater discharge resulting from ground disturbing activities. A copy of the permit is available for viewing at the City of Springfield. All work shall be conducted in accordance with the requirements and conditions of the City's permit. CONTRACTOR shall accommodate all special inspections required thereof, all at no additional expense to the OWNER beyond prices as bid. The CONTRACTOR shall perform the minimum monitoring requirements as described in Schedule B of the City's 1200-CA Permit. Monitoring reports shall be submitted to the ENGINEER and OWNER monthly and shall be made available more frequently as requested by the ENGINEER or OWNER.

B1.4 DEQ and EPA Requirements

It is the Policy of the City of Springfield that there will be full compliance with the City's wastewater NPDES permit and that there shall be no spillage of raw sewage during the construction phase of this project. In the event that this Policy is inadvertently violated, the CONTRACTOR shall immediately notify the Project Inspector and City Inspector of the spill. Notification is the process that ensures that the appropriate entities are informed of a release of raw sewage. If the CONTRACTOR is unable to contact the Inspector, the CONTRACTOR shall notify the Collection System Compliance Officer or his Designee.

Project Inspector:	Murray, Smith & Associates, Inc. 541-741-2975
City Inspector:	Denny Wright, 541-736-1010
Collection System Compliance Officer:	Brian Conlon, 541-726-3753
Designee:	Mike Risley, 541-726-3615

The representative of the City of Springfield shall report the sewage spill within 24 hours to the Oregon **Department of Environmental Quality** and any other appropriate entities. A spill contained in an excavation is still considered a spill and must be reported.

The CONTRACTOR also agrees to liquidated damages in the amount of $500.00 per incident for failure to report sewage spills plus an amount sufficient to reimburse the City for any civil and administrative penalties paid by the City as a result of the CONTRACTOR's failure to report. Failure to report sewage spills may subject the City to (1) civil penalties of up to $32,500.00 per day of violation pursuant to Section 309(d) of the Clean Water Act, 33 U.S.C. § 1319(d); (2) administrative penalties of up to $11,000.00 per day for each violation, pursuant to Section 309(g) of the Clean Water Act, 33 U.S.C. § 1319(g); or (3) civil action in federal court for injunctive relief pursuant to Section 309(b) of the Clean Water Act, 33 U.S.C. § 1319(b).

B1.5 Prevention, Containment and Clean-up of Sanitary Sewer Spills

The CONTRACTOR shall have on site a sewage spill kit and provide to the ENGINEER a written **Prevention, Containment and Clean-up Plan** for spilled sewage at the **Pre-Construction Meeting**. The **Plan** shall describe how the CONTRACTOR will prevent spillage during construction, the equipment and materials on site, and the methods to be used to contain and clean up spilled sewage. Approval of the **Prevention, Containment and Clean-up Plan** does not relieve the CONTRACTOR of responsibility for preventing spills or properly containing and cleaning up any spills. If the written **Plan** is not received and approved prior to commencing on-site work, the ENGINEER reserves the right to shut down all work at the CONTRACTOR's expense (with a written stop work order to follow within 24 hours) until a plan has been approved and implemented.

B1.6 Site Investigation and Physical Data

The CONTRACTOR acknowledges that it is satisfied as to the nature and location of the work and the general and local conditions, including but not limited to those bearing upon transportation, disposal, handling and storage of materials, availability of water, roads, groundwater and its disposal, access to the sites, coordination with other contractors, and conflicts with pipelines, structures and other contractors. Information and data furnished or referred to herein is provided for information only. Any failure by the CONTRACTOR to become acquainted with the available information and existing conditions will not be a basis for relief from successfully performing the work and will not constitute justification for additional compensation.

Prior to construction the CONTRACTOR shall verify the locations and elevations of existing pipelines, structures, grades and utilities that could be impacted by construction activities. The OWNER assumes no responsibility for any conclusions or interpretations made by the CONTRACTOR on the basis of the information made available.

The CONTRACTOR shall pothole and verify the location and elevation of high pressure gas lines and fiber optic lines before a crossing is made.

B1.7 Interferences, Obstructions and Sewer Crossings

At certain places, power, light and telephone poles may interfere with excavation and the operation of the CONTRACTOR's equipment. The CONTRACTOR shall make necessary arrangements with utility companies for moving or maintaining such poles. The utility company affected by any such interference shall be notified thereof so that the necessary moving or proper care of poles and appurtenances may have appropriate attention.

All costs resulting from any other interference and obstructions, or the replacement of such, whether or not herein specifically mentioned, shall be included and absorbed in the unit prices of the CONTRACTOR's bid.

B1.8 Work Hour Limitations

All work shall be conducted between the hours of 7:00 a.m. and 6:00 p.m. on weekdays only (Monday through Friday). Requests for variations in work hours shall be made in writing and shall be submitted to the ENGINEER for approval. Refer to Bid Submittal Form for work date limitations.

B1.9 Record Drawings

CONTRACTOR shall maintain at the site one set of specifications, full size drawings, shop drawings, equipment drawings and supplemental drawings which shall be corrected as the work progresses to show all changes made. Drawings shall be available for inspection by the ENGINEER. Upon completion of the contract and prior to final payment, specifications and drawings shall be turned over to the ENGINEER.

B1.10 Competent Person Designation

CONTRACTOR shall designate a qualified and experienced "competent person" at the site whose duties and responsibilities shall include enforcement of Oregon - OSHA regulations regarding excavations, the prevention of accidents, and the maintenance and supervision of construction site safety precautions and programs.

B1.11 Vehicle Parking

The vehicles of the CONTRACTOR's and subcontractors' employees shall be parked in accordance with local parking ordinances.

B1.12 Street Cleanup

Refer to Erosion Control Notes on plan sheets.

B1.13 Field Service by Manufacturer's Representative

The CONTRACTOR will be required to furnish the services of a manufacturer's or material's representative for all major equipment and materials furnished by the CONTRACTOR or OWNER under this contract, to check, place in operation and test the installation, and train operating personnel. The manufacturer's representative shall be qualified and authorized to perform repairs and maintenance on the equipment. The above gives a general scope of the services desired from the manufacturer's representative. It will be the responsibility of the CONTRACTOR and the equipment manufacturer to determine detailed requirements. Costs for services of the manufacturer's representative shall be included in the proposal of the CONTRACTOR. The operator training mentioned above shall include sufficient time during the CONTRACTOR's operation and testing period to fully explain to the operating personnel the features of the equipment and maintenance thereof.

B1.14 Construction Within Private Easements

When portions of the work contemplated are within easements held by the OWNER on private property, the CONTRACTOR shall ascertain for itself to what extent the width, status and special conditions attached to easements may have on its operations and all costs resulting there from shall be included and absorbed in the unit prices of the CONTRACTOR's bid. CONTRACTOR shall coordinate with private property owners and businesses if required. Landscaping, surface restoration and fence restoration shall be completed within 24 hours following piping and conduit installation and other construction work. Temporary fencing shall be provided continuously until such private fencing is properly restored.

The CONTRACTOR's attention is directed to City of Springfield Standard Specification 105.06 regarding safety and the protection of property. Certain portions of this project require working in close proximity to existing structures and private property. It is the CONTRACTOR'S responsibility to conduct its operations and limit the size of equipment used in such a manner so as to prevent damage to existing property from excessive vibration or from other direct or indirect CONTRACTOR operations. The cost associated with repairing or replacing property that is damaged by the CONTRACTOR's operations shall be the responsibility of the CONTRACTOR, in accordance with the General Conditions.

CONTRACTOR shall have daily contact with the businesses, property owners and residents when the CONTRACTOR's work will be on or adjacent to that business or property. CONTRACTOR shall give 24 hour written notice to the businesses, property owners and residents of any construction that will affect the business, property owner, or resident's daily activities.

The CONTRACTOR shall maintain access and normal services to businesses, property owners and residents throughout the duration of the project. A public notification program shall be implemented, and shall as a minimum, require the CONTRACTOR to be responsible for contacting each home or business affected by the project and informing them of the work to be conducted, and when and how they will be affected. The CONTRACTOR shall also provide the following:

A. Written notice to be delivered to each home or business at least two (2) days but not more than four (4) days prior to the beginning of work being conducted on the section adjacent to their property or in any location that will directly affect the use of their property, access, or other services. All Notices shall include a local telephone number of the CONTRACTOR they can call to discuss the project or any potential problems. CONTRACTOR shall be available by telephone 24 hours per day for the duration of this project to address any emergency situations.

B. Where construction requires access on or through private property the OWNER will obtain a right-of-entry authorization from the property owner. It will then be the responsibility of the CONTRACTOR to comply with the terms of this authorization and coordinate their construction efforts with the individual property owners. The ENGINEER will be made available to assist the CONTRACTOR. However, if CONTRACTOR desires to access easements through private property or use private property as a staging area, it is the CONTRACTOR's responsibility to coordinate such access with the property owner. Refer to Paragraph B1.20 for further requirements.

C. Payment for the public notifications, acquisition of right-of-entry authorization, and the coordination of such effort shall be considered incidental to the project.

No work shall be conducted on private property until the authorizations have been obtained and the OWNER has authorized the CONTRACTOR to proceed with the work within such private properties.

B1.15 Surveys

Refer to Special Provisions, Section F - Construction Survey Work, for survey requirements.

B1.16 On-Site Sanitary Facilities

The CONTRACTOR shall provide and maintain sanitary facilities for its employees and its subcontractors' employees that will comply with the regulations of the local and State Departments of Health and as directed by the ENGINEER.

B1.17 Maintain Access to Businesses, Residents, Private Roads and Driveways

The CONTRACTOR shall conduct the project with proper regard for the safety and convenience of the public. When access to a business or businesses may be confusing for the traveling public due to operations of the CONTRACTOR, the CONTRACTOR shall provide adequate signage to clarify alternate or existing access to the business(es). Refer to City of Springfield's Standard Construction Specifications Section 107.13 and Special Provisions, Section E – Temporary Traffic Control.

B1.18 Erosion and Sedimentation Control

Temporary construction site erosion control measures shall be constructed by the CONTRACTOR in accordance with the City's NPDES 1200-CA Permit. Work shall not commence until the approved erosion and sedimentation control measures are in place. Also, refer to Erosion and Sediment Control notes on the Drawings.

B1.19 Compaction Testing

Refer to City of Springfield's Standard Construction Specifications section 106.02.

The OWNER will employ the services of an independent testing laboratory for on-site compaction testing and certain materials approval.

B1.20 Limits of the Work and Storage of Spoils

The limits of the site which may be used for construction, storage, materials handling, parking of vehicles and other operations related to the project include the project site as shown on the drawings and adjacent public rights-of-way subject to permission of the public owner of that

right-of-way. The limits of work also include rights of access obtained by the OWNER or CONTRACTOR, subject to all public laws and regulations and rights of access by utility companies and other holders of easement rights.

For any work conducted on private property, it is the CONTRACTOR'S responsibility to coordinate access with the property owner and to complete associated surface restoration to the satisfaction of the property owner. Prior to final payment, the CONTRACTOR shall obtain a release from the property owner on a form prepared by the ENGINEER confirming that the work completed and site restoration work is satisfactory to the property owner. All releases shall be submitted to the ENGINEER.

Landscaping, surface restoration and fence restoration work shall commence within 72 hours following work on or removal of equipment or materials from private property. Temporary fencing shall be provided continuously until such private fencing is properly restored.

A sample release form follows:

APPROVAL AND RELEASE
FRANKLIN/MCVAY SANITARY SEWER EXTENSION
(PR0JECT NO. P21080)
CITY OF SPRINGFIELD, OREGON

Site Address: _____

I/We hereby accept the construction and restoration work performed on my/our property by (Name of CONTRACTOR). The work has been performed to my/our satisfaction and I/we release (Name of CONTRACTOR) and the City of Springfield from any further obligations with respect to this work.

Owner Name:_____

Date:_____

Signature: _____

Owner Name:_____

Date:_____

Signature: _____

B1.21 Sewage Diversion and By-Pass Pumping

Refer to Special Provisions, Section M - Sewage Diversion and By-Pass Pumping of these specifications.

B1.22 Field Changes, Lateral Connection Locations

Changes to lateral connection locations may be allowed during the course of work in order to avoid interference with certain unforeseen obstructions or conflicts between existing and proposed facilities. Such changes may be allowed on a case by case basis as approved by the ENGINEER.

B1.23 Oregon Products

CONTRACTOR's attention is directed to the provisions of Oregon Law, ORS 279A.120 regarding the preference for products that have been manufactured or produced in Oregon. CONTRACTOR shall use Oregon-produced or manufactured materials with respect to common building materials such as cement, sand, crushed rock, gravel, plaster, etc., and Oregon-manufactured products in all cases where price, fitness, availability and quality are otherwise equal.

B1.24 Dewatering

CONTRACTOR should anticipate that significant dewatering efforts may be required to complete the sewer installation. Due to the nature of the local geology, the close proximity of the project to the Willamette River, and the potential for relatively high and variable groundwater levels in the area, large localized flows of groundwater may be encountered and could result in areas of instability of the trench cut face. CONTRACTOR’s attention is directed to the geotechnical investigation report included as supplementary information and Special Provisions, Section H - Dewatering.

B1.25 Salvage and Debris

Unless otherwise indicated on the Drawings or in the Specifications, all castings, pipe, equipment, demolition debris, fences, trees, shrubs, spoil or any other discarded material or equipment shall become the property of the CONTRACTOR and shall be salvaged or disposed of in a manner compliant with applicable Federal, State and local laws and regulations governing disposal of such waste products. No burning of debris or any other discarded material will be permitted. The CONTRACTOR shall perform any demolition for the completion of this project and shall salvage and recycle all construction and demolition debris as is feasible and cost effective, in accordance with ORS 279C.510. Prior to disposal of materials, the CONTRACTOR is to provide to OWNER a copy of written permission of private property owners with copy of fill permit for said private property as may be required for disposal of materials.

CONTRACTOR shall deliver existing pumps from the Nugget Way Pump Station to the OWNER upon removal.

B1.26 Emergency Maintenance Supervisor

The CONTRACTOR shall submit to the ENGINEER the names, addresses and telephone numbers of at least two employees responsible for performing emergency maintenance and repairs when the CONTRACTOR is not working. These employees shall be designated, in writing by the CONTRACTOR, to act as its representatives and shall have full authority to act on its behalf. At

least one of the designated employees shall be available for a telephone call any time an emergency arises.

B1.27 Utility Properties and Service

In areas where the CONTRACTOR's operations are adjacent to or near a utility and such operations may cause damage which might result in significant expense, loss and inconvenience, the operations shall be suspended until all arrangements necessary for the protection thereof have been made by the CONTRACTOR.

The CONTRACTOR shall notify all utility offices which may be affected by the construction operation at least 48 hours in advance. Before exposing any utility, the utility having jurisdiction shall grant permission and may oversee the operation. Should service of any utility be interrupted due to the CONTRACTOR's operation, the proper authority shall be notified immediately. It is of the utmost importance that the CONTRACTOR cooperates with the said authority in restoring the service as promptly as possible. Any costs shall be borne by the CONTRACTOR.

The Springfield Utility Board (SUB) has overhead power lines and poles located along Franklin/McVay Highway. In the event SUB electrical is needed to suspend their power poles during construction, CONTRACTOR to notify ENGINEER immediately. The OWNER will pay SUB directly for pole support that may be required where the work is in close proximity to SUB poles. The CONTRACTOR will be responsible for coordinating their work with SUB and arranging for pole support if needed.

Utilities which may be impacted include the following:

Electric	Springfield Utility Board (SUB)
Water	Springfield Utility Board (SUB)
Telephone	Century Link
Gas	Northwest Natural
Cable	Comcast/Verizon
Sanitary Sewer	City of Springfield
Storm Sewer	City of Springfield
Street Lighting	City of Springfield/ODOT
Traffic Signals	City of Springfield
Highways	ODOT/Lane County/City of Springfield
Fiber Optics	Sprint/Level 3 Communications

B1.28 Coordination with Collection System Customers

Refer to Paragraphs B1.14, B1.20 and B1.22 for requirements.

B1.29 Submittals

Refer to Special Provisions, Section D - Submittals.

B1.30 Coordination With Other Contractors and With OWNER

Certain work within this contract may require connection to and coordination with the work of other contractors, Springfield Utility Board (SUB) and OWNER. The CONTRACTOR under these specifications shall cooperate fully with all other contractors, SUB and OWNER and carefully fit its own work to such other work as may be directed by the ENGINEER. The CONTRACTOR shall not commit or permit any act to be committed which will interfere with the performance of work by any other contractor, SUB or the OWNER.

Lane County will be working on Glenwood Boulevard until the end of July 2014. No road closures for this project will be allowed until Lane County's work on Glenwood Boulevard is completed.

B1.31 Noise Limitations

All applicable City, County ordinances and State regulations shall be complied with.

B1.32 Not Used

B1.33 "Or Equal" Clause

In order to establish a basis of quality, certain processes, types of machinery and equipment or kinds of material may be specified on the drawings or herein by designating a manufacturer's name and referring to its brand or product designation. It is not the intent of these specifications to exclude other processes, equipment or materials of a type and quality equal to or better than those designated. The "Equal" product, component or process shall be the same or better than that named in function, performance, reliability, quality and general configuration. Determination of equal in reference to the project design requirements will be made by the ENGINEER, pursuant to Subsection 106.07 of the Standard Construction Specifications.

When a manufacturer's name, brand or item designation is given, it shall be understood that the words "or equal" follow such name or designation, whether in fact they do so or not. If the CONTRACTOR desires to furnish items of equipment by manufacturers other than those specified, he shall secure the approval of the ENGINEER prior to placing a purchase order.

No extras will be allowed the CONTRACTOR for any changes required to adopt the substitute equipment. Therefore, the CONTRACTOR's proposal for an alternate shall include all costs for any modifications to the drawings, such as structural and foundation changes, additional piping or changes in piping, electrical changes or any other modifications which may be necessary or required for approval and adoption of the proposed alternate equipment. Approval of alternate equipment by the ENGINEER before or after bidding does not guarantee or imply that the alternate equipment will fit the design without modifications.

B1.34 to B1.45 – Not Used

B1.46 Contaminated Material

A. General

It is possible that the CONTRACTOR may encounter contaminated material (soil and/or water) during excavation activities. This specification identifies requirements for handling and disposing of contaminated media.

B. Definitions

1. "Contaminated material" is defined as soil, water, free product, Underground Storage Tanks (UST), buried abandoned utility lines containing residual or free product, solid waste, treated wood waste, chemical containers, or other solid, liquid, or gas substances with contamination levels above background levels.

2. "Hazardous substances" shall mean those substances or materials defined in the Oregon Revised Statutes (ORS) 465.200, as amended.

3. "Release" shall have the meaning as defined in ORS 465.200, as amended.

4. "Environmental laws" shall mean any applicable statute, law, ordinance, order, consent decree, judgment, permit, license, code, covenant, deed, common law, treaty, convention or other requirement pertaining to protection of the environment, health or safety, natural resources, conservation, wildlife, waste management or disposal, hazardous substances or pollution, including but not limited to regulation of releases to air, land, water, and groundwater.

C. Execution

1. Discovery of Contaminated Material

In the event that the CONTRACTOR, during the course of construction or during any other activities authorized under this contract, should encounter suspected contaminated material or any other materials suspected of posing a threat to human health and the environment, the CONTRACTOR shall notify the ENGINEER immediately and manage according to requirements identified below. If, after testing, the material is determined not to be contaminated, no additional payment will be made for the handling, storage, equipment, CONTRACTOR stand-by time or the disposal of the non-contaminated materials.

2. Discovery of Contaminated Soil

CONTRACTOR shall note evidence of contamination (odor, visual staining of soil, free liquid product seeping from soil, sheen on groundwater etc.) and note location of evidence on a sketch of the excavation and provide to the ENGINEER.

CONTRACTOR shall report the discovery to the ENGINEER immediately. CONTRACTOR shall stop all excavation activities, and secure the site to prevent entry by the public. The excavation shall not be backfilled. Protect all open excavations with berms, plates and fencing. CONTRACTOR may continue with work in other non-contaminated areas.

CONTRACTOR shall assist ENGINEER in collecting sample(s) of suspected contaminated media for testing and characterization. CONTRACTOR shall allow 21 days, at no cost to OWNER, for testing, results and instructions as to how to proceed with contaminated materials.

The CONTRACTOR shall obtain a copy of an approved soil disposal/acceptance permit (Disposal/Treatment Facility requires transporter to have a copy of the permit.)

CONTRACTOR will transport and dispose of contaminated material at an approved disposal/treatment facility.

CONTRACTOR shall provide the ENGINEER with a copy of the contaminated soil disposal receipt.

3. Handling of Contaminated Soil

Excavation of contaminated materials shall be in the presence of the ENGINEER.

After approval from the ENGINEER, excavate the soil in a manner that prevents commingling of contaminated and non-contaminated soil. ENGINEER will make determination (based on soil saturation) if contaminated soil can be directly transported to a treatment or disposal facility, or if soil needs to be stockpiled to reduce water content. ENGINEER will determine when stockpiled soil can be transported off-site.

CONTRACTOR will be responsible for stockpiling contaminated soil in containers or on impervious surface to prevent the spread of contamination. Any water runoff from the contaminated soil stockpile area(s) must be contained by CONTRACTOR and handled as contaminated water.

Minimize movement of excavation equipment over or through contaminated soil to prevent movement of contaminated soil into areas where no contaminated soil exists.

Stockpiles will be created on an approved site and shall be surrounded by a fence to limit access. The stockpiles must be covered and bermed during periods of rainfall to prevent run-on and run-off. The stockpiles shall be covered with a minimum 10 mil high density polyethylene (HDPE) plastic during periods of strong winds, nightfall, over the weekends, or during extended work stoppages. If dust is observed coming from the stockpiles, the stockpiles shall be either covered or the dust controlled with water.

Maintain excavation equipment in good working order. Prevent spillage of oil, fuel, or hazardous substances from equipment. In particular, promptly repair oil leaks from equipment and clean up any contaminated soil.

4. Handling of Contaminated Water

Contaminated groundwater extracted from excavations, dewatering wells, and other sources on the project shall be placed into temporary holding tanks and tested for appropriate analytes as required for discharge to the sanitary sewer system. CONTRACTOR shall be responsible for all treatment of and/or disposal of contaminated groundwater encountered. Water that fails to meet discharge standards may require treatment or alternate disposal methods.

The CONTRACTOR shall furnish, install, and operate all necessary machinery, pumps, pipes, storage tanks and miscellaneous equipment to keep excavations free from contaminated water during construction, pre-treat groundwater if necessary, and discharge or disposal, after approval by the ENGINEER.

5. Transport of Contaminated Materials

CONTRACTOR shall comply with all applicable Federal, State, or local laws, codes, and ordinances that govern or regulate contaminated substance transportation. Contaminated soils placed in stockpiles shall be loaded into trucks in a manner that prevents the spilling or tracking of contaminated soil into areas of the site with uncontaminated soil. Loose material falling onto the exterior of the truck during loading shall be removed before the truck leaves the loading area. Any material collected in the loading area shall either be placed back into the truck or back into the stockpile. If loading areas are unpaved, the surface soil shall be sampled at the conclusion of the loading activities to confirm that contaminated soil is not present. If loading areas are paved, any loose soil

shall be cleaned from the pavement at the conclusion of the loading activities.

Specific truck haul routes shall be established before beginning off-site contaminated media transport. On-site truck routes shall be established to minimize or prevent movement of trucks over contaminated soils. Off-site truck routes shall be established to reduce the risk of releases of contaminated soils and impact on local traffic. The CONTRACTOR shall be responsible for ensuring that loaded truck weights are within acceptable limits. All trucks shall be covered before they leave the loading area.

The CONTRACTOR shall ensure that all drivers of vehicles transporting contaminated substances have in their possession during transport all applicable Oregon State and local vehicle insurance requirements, valid driver's license, and vehicle registration and license. The CONTRACTOR shall be responsible for informing all drivers of transport vehicle about:

a. The nature of the material transported.

b. Required routes to and from the off-site thermal treatment or disposal facility.

c. Applicable County street regulations and requirements, and State of Oregon Department of Transportation codes, regulations and requirements.

d. The County's requirement for proper handling and transportation of the substances.

The CONTRACTOR shall not allow contaminated substances to be spilled or tracked off-site at any time during the project. Trucks used for the transportation of contaminated substances off-site shall be water tight, substance compatible, licensed, insured, and permitted pursuant to federal, state, and local statutes, rules, regulations and ordinances.

B1.47 Construction Access

Construction equipment and trucks are prohibited from using Henderson Avenue or Nugget Way for access during construction.

B1.48 Sequence of Construction Requirements

In order to meet the objectives of this project, certain elements of work must be completed in the following sequence:

A. Undertake and complete exploratory excavations (potholing) at the two sites where the proposed sewer crosses the existing fiber optic lines within the UPRR right-of-way. These excavations shall be conducted to verify that there will be adequate clearance between the existing fiber optic casings and the proposed sewer.

B. Undertake and complete exploratory excavations at the site of the downstream connection to the existing 30-inch diameter sewer line near Franklin Boulevard to determine the location and elevation of the existing pipe.

C. Construct the 18-inch diameter trunk sewer, side sewers, manholes, curbs, gutters, sidewalks, paving, striping, and associated work and appurtenances from the downstream connection to the existing 30-inch diameter trunk sewer to and including the manhole at the intersection of McVay Highway and 19th Avenue (approximate limits are shown on the Drawings, Sheet C-2), as well as all of the SUB waterline and electrical facilities in their entirety.

NOTE: Items A, B, and C shall be completed by September 29, 2014.

D. Construct the remaining portion of the 18-inch diameter trunk sewer, side sewers, manholes, curbs, gutters, sidewalks, paving, striping and appurtenances from 19th Avenue to the upstream terminus of the trunk sewer.

E. Construct the 12-inch diameter 19th Avenue sewer, laterals, manholes, and appurtenances from McVay Highway to the upstream terminus of the sewer at Nugget Way.

F. Construct the Nugget Way pump station and force main modifications.

NOTE: Items D, E, and F shall be completed by September 30, 2015.

CONTRACTOR will not be allowed to close E. 19th Avenue and McVay Highway at the same time.

Refer to Paragraph B1.8 for work hour limitations.

The above sequence of construction requirements may not include all required project work and is intended only to identify the sequence of certain major milestones that are required to meet the project objectives. Variations to the above sequence of construction requirements must be approved by the ENGINEER.

B1.49 to B1.50 Not Used

B1.51 Project Information Signs

The CONTRACTOR shall furnish and install project information signs in accordance with the following requirements:

A. For a project located on a confined site such as a reservoir, pumping station, well house, treatment plant, or similar facility, one project information sign shall be required. For a project located on a public right of way such as a pipeline project, a project information sign shall be installed facing each direction of traffic at each location where traffic is entering the work area. Up to five signs may be required for pipeline projects.

B. A submittal for the project information sign(s) shall be prepared for the ENGINEER'S approval prior to fabrication.

C. The CONTRACTOR shall install the project information sign(s) at location(s) as directed by the ENGINEER.

D. No construction work shall commence on the project site until the project information signs are installed. Project information signs shall be installed a minimum of two weeks (14 calendar days) prior to the start of work.

E. The CONTRACTOR shall maintain the signs through the duration of the project.

F. The cost of furnishing, installing and maintaining the project information signs shall be included in the CONTRACTOR's bid for traffic control. For the purposes of bidding, 5 project information signs should be expected.

The project information sign(s) shall be constructed of 3/4-inch thick plywood with a finish grade of veneer on the sign face. The sign(s) shall be sized as necessary to accommodate the required project information. The sign(s) shall be securely attached to a minimum of two 4-inch square treated wood posts for each 4-foot by 8-foot panel. The sign(s) shall be installed such that the top of the sign is approximately 10 feet above grade or as necessary to permit proper public viewing. The wood posts shall be buried at least 3 feet below grade. Provide adequate supports for the sign(s) as site conditions dictate. The sign(s) shall have black letters on a white background and they shall be the product of a commercial sign manufacturer or supplier. Logos shall be color. The letters shall be at least 4-inches in height.

The sign(s) will contain basic project information including: Project name, estimated project duration, project construction cost, project OWNER's name and OWNER's contact and phone number, ENGINEER's name, CONTRACTOR's name, OWNER's and ENGINEER's company logos, the CONTRACTOR's logo if the CONTRACTOR so desires, any funding agency logo(s) along with any required wording from those agencies. The logos shall be sized such that they are visible from a distance approved by the ENGINEER. The OWNER, ENGINEER and funding agencies will provide electronic images of their logos for the CONTRACTOR's use in developing the signs.

B1.52 Business Access Signs

Refer to the Traffic Control Plans and Special Provisions, Section E – Temporary Traffic Control, for requirements.

END OF SECTION

SPECIAL PROVISIONS

SECTION C – Measurement and Payment

P21080 Franklin/McVay Sanitary Sewer Extension

C1. General

Measurement and payment will be on a unit price basis in accordance with the prices set forth in the Bid Submittal for individual work items. Where work is required but does not appear as a separate item in the Bid Submittal, the cost for that work shall be included and absorbed in the unit prices named in the Bid Submittal. CONTRACTOR shall make a careful assessment when preparing the Bid Submittal.

Progress payment will be made in accordance with Special Provisions, Section A – General Requirements, Section A1.7 Progress Payment.

Schedule A – Work associated with the new sewer main on Franklin/McVay Highway, Station 1+00 to 41+80

Item No.	Description
A-0006	Internal Sewer Video Inspection: Payment for internal sewer video inspection associated with work on McVay Highway, including all equipment, inspection reports and the DVD of the inspection, will be on a Lump Sum (LS) basis.
A-0046	Potholing for Fiber Optic Within the UPRR Right-of-Way: Payment for potholing the existing fiber optic lines within the UPRR right-of-way where the new sanitary sewer, waterline and electrical conduit cross the fiber optic lines including excavation, dewatering, backfill, furnishing and installing temporary AC surface restoration, traffic control, surveying the elevation of the existing line, measuring the diameter of the existing line and notifying the ENGINEER of the measured and surveyed values, will be on a Lump Sum (LS) basis.
A-0058	Contaminated Soil Excavation and Disposal: Measurement and payment for the excavation and disposal of contaminated soil associated with work on McVay Highway will be made on a per Cubic Yard (CY) basis. Payment shall include all labor, equipment and material, excavation, stockpiling, pretreatment, transportation, disposal, notifications, fees, permits and CONTRACTOR standby time. This item covers payment for soil that is contaminated by petroleum based contaminants only that can be disposed of at a municipal solid waste facility permitted to accept such material. Material that is contaminated with other contaminants requiring disposal in a separate special waste facility, based on sampling and testing, is not covered in this Bid Item and will be covered by a negotiated change order to the contract.
A-0058a	Contaminated Groundwater Mitigation: Measurement and payment for the pre-treatment and/or removal and disposal of contaminated groundwater associated with work on McVay Highway will be made on a per Gallon (GAL) basis. Payment shall include all labor, equipment and material required for dewatering, storage, pretreatment, transportation, disposal, notifications, reporting, fees, permits and CONTRACTOR standby time. This item covers payment for groundwater that is contaminated by petroleum based contaminants only that can be treated and discharged to the sanitary sewer

system or disposed of at a municipal solid waste facility permitted to accept such material. Material that is contaminated with other contaminants requiring disposal in a separate special waste facility, based on sampling and testing, is not covered in this Bid Item and will be covered by a negotiated change order to the contract.

A-0060 Mobilization, Demobilization, Bonds and Insurance: Payment for mobilization, demobilization, bonds and insurance will be on a Lump Sum (LS) basis. The amounts paid for mobilization, demobilization, bonds and insurance in the contract progress payment will be based on the percent of the original contract amount that is earned from other contract items, excluding the amount paid for materials on hand, as follows:

A. When 5 percent of the total original contract amount is earned from other Bid Items, excluding the amount paid for materials on hand, 50 percent of the amount bid for mobilization, or 5 percent of the total original contract amount, whichever is least, less normal retainage, will be paid.

B. When 10 percent of the total original contract amount is earned from other Bid Items, excluding the amount paid for materials on hand, 100 percent of the amount bid for mobilization, or 10 percent of the total original contract amount, whichever is least, less normal retainage, will be paid.

C. Upon completion of all work on the project, payment of any amount bid for mobilization in excess of 10 percent of the total original amount will be paid.

The above schedule of partial payments for mobilization shall not be interpreted to limit or preclude partial payments otherwise provided by the Contract.

A-0064 Erosion Control: Measurement and payment for temporary construction site erosion and sedimentation control measures associated with work on McVay Highway shall be on a Lump Sum (LS) basis. The Lump Sum (LS) price shall include compensation for all planning, design, labor, equipment and materials for construction site erosion and sedimentation control measures all in accordance with current requirements and regulations of the City of Springfield, Lane County, the Department of Environmental Quality, and any other government agencies with jurisdiction over the project and in accordance with the City of Springfield's NPDES 1200-CA Permit.

A-0061 Temporary Traffic Control: Payment for traffic control, maintenance and protection associated with work on McVay Highway including all coordination, materials, business access signs, project information signs, removing and replacing existing signs where required including replacing sign support posts, traffic control devices, labor and equipment, temporary pavement markings and striping, portable changeable message signs, flagging and all other temporary traffic control, as required, will be on a Lump Sum (LS) basis.

A-0069 General Surface Restoration: Payment for all required general surface restoration, other than streets, sidewalks and curbs, including stripping and stockpiling topsoil, re-grading to original elevation, bark mulching planting areas, repairing landscaped areas, seeding and cleanup following construction associated with work on McVay Highway including resurfacing gravel surfaces as required, will be on a Lump Sum (LS) basis.

A-0072 Cold Plane Pavement Removal – 2-Inch Depth: Payment for cold plane pavement removal (2-inch depth) of existing AC concrete surface associated with work on McVay Highway will be on a per Square Yard (SY) basis. Measurement shall be of the total area ground, calculated by the ENGINEER using field measurements. Disposal of existing AC

surfacing shall be considered incidental to this item. Temporary removal and reinstallation of castings shall be considered incidental to this Bid Item.

A-0072a Cold Plane Pavement Removal – 0-Inch to 2-Inch Depth: Payment for taper grind area required at the transition between grind and inlay and overlay, at project ends, at the intersection of McVay Highway and E. 19th Avenue and at asphalt approaches will be on a per Square Yard (SY) basis. Measurement shall be of the total area ground, calculated by the ENGINEER using field measurements. Disposal of existing AC surfacing shall be considered incidental to this item. Temporary removal and reinstallation of castings shall be considered incidental to this Bid Item.

A-0073 Trench Foundation Over Excavation and Subgrade Stabilization: Payment for over excavation and subgrade stabilization for unsuitable trench foundation conditions associated with work on McVay Highway will only be considered as approved by the ENGINEER, but when such pre-approval is obtained, payment will be made on a per Cubic Yard (CY) basis according to the volume of material excavated, measured by neat line at the location of the excavation, to the nearest 0.1 cubic yard. Price provided by the CONTRACTOR shall include the price for excavating beyond the normal Bid Item limits to the limits pre-approved by the ENGINEER, disposal of excavated material, furnishing and installing subgrade geotextile fabric, furnishing, placing and compacting crushed rock stabilization material in the excavated void.

A-0076 Trench Rock Excavation: Payment for trench rock excavation associated with work on McVay Highway will be made at the unit price per Cubic Yard (CY) of rock excavated and rock excavation will be paid for in addition to the lineal foot price for pipe, trench excavation and backfill. The Bid Item limits for pipe trench shall be 12 inches below the pipe invert and the width shall be the nominal pipe diameter plus 1 foot on each side of the pipe. Bid Item limits for manholes and other structures shall be to the depth necessary to install the structure and to a maximum of 18 inches beyond the outside walls of the manhole or structure. No payment will be made for trench rock excavation beyond these limits. Payment for the removal of cement treated base (CTB), when classified as rock as defined in Special Provisions, Section I - Earthwork, will be made at the unit price per Cubic Yard (CY) and have the Bid Item limits described for trench rock excavation.

A-0121 Reinforced Concrete Commercial Driveway Apron: Payment for reinforced concrete commercial driveway aprons complete shall be made on a per Square Yard (SY) basis, regardless of the apron style or required installed thickness. Work shall include furnishing and installing concrete and aggregate base, reinforcing, jointing, finishing concrete surfaces, removal and disposal of existing concrete driveways, saw cutting of existing concrete and/or AC surfacing as required to provide a smooth driveway approach, and other incidental work as required. Measurement of the concrete commercial driveway apron shall be made by measuring the finished in-place area. Protection of driveway from adverse weather conditions and traffic during curing shall be included in the payment for this Bid Item.

A-0121a Transition Behind Concrete Driveway: Payment for the transition behind new concrete driveways on McVay Highway shall be paid for on a Square Yard (SY) basis. The unit price shall include all work and materials required to construct the asphalt transition including sawcutting, excavation, grading, backfill, compaction, ¾-inch minus crushed rock, sand sealing joints and all other work as required and shown on the Drawings. HMAC required for the transition will be paid for under the Bid Item for Hot Mix Asphaltic Concrete (HMAC) Trench Pavement, 2-Inch Overlay and 2-Inch Inlay, Level 3, ½-Inch Dense Pavement Restoration, A-0542.

A-0126 Asphalt Approach: Payment for asphalt approaches for driveways and side streets associated with work on McVay Highway will be on a per Each (EA) basis. The unit price shall include all work and materials required to construct the asphalt approach including excavation, grading, backfill, compaction and all other work as required. Payment will be payment in full for all extra or additional costs involved in placing asphalt concrete in the asphalt approach. These costs are in addition to those which are included in HMAC incorporated into the approach. HMAC required for asphalt approaches will be paid for under the Bid Item for Hot Mix Asphaltic Concrete (HMAC) Trench Pavement, 2-Inch Overlay and 2-Inch Inlay, Level 3, ½-Inch Dense Pavement Restoration, A-0542.

A-0132 Remove and Replace Existing Standard Concrete Curb and Gutter: Payment for removing and replacing existing standard concrete curb and gutter, including all work, materials, tools, equipment, labor and incidentals necessary to complete the work, including earthwork, sawcutting, existing curb and gutter removal, furnishing and placing aggregate base and placing concrete curb and gutter will be on a per Linear Foot (LF) basis. Measurement shall be made along the face of the installed curb and gutter, from end to end including tapers or depressed lengths at driveways and ramps.

A-0142 Truncated Domes for Handicap Ramps: Measurement and payment for the truncated domes associated with ADA compliant sidewalk ramps shall be on a per Each (EA) basis. The measurement for truncated domes will be based on each sidewalk ramp requiring truncated dome pads. Payment shall include all work, materials, tools, equipment, labor and incidentals necessary to furnish and install truncated dome pads.

A-0148 Remove and Replace Existing Concrete Sidewalk: Payment for removing and replacing existing concrete sidewalk, including all work, materials, tools, equipment, labor and incidentals necessary to complete the work, including earthwork, sawcutting, existing concrete sidewalk removal, furnishing and placing aggregate base, and placing concrete sidewalk will be on a per Square Yard (SY) basis. No separate payment will be made for adjustment of valve and meter boxes. Restoration of disturbed area behind the sidewalk with like material is incidental to this Bid Item. Measurement of the concrete sidewalk shall be made by measuring the finished in-place area. Protection of sidewalk from adverse weather conditions and traffic during curing shall be included in the payment for this Bid Item. The area of sidewalk where sidewalk ramps are installed will be measured and paid for under this Bid Item. No separate payment will be made for sloped portions of sidewalk at sidewalk ramps. Concrete driveways are paid for under the Bid Item Reinforced Concrete Commercial Driveway Apron, A-0121.

A-0197 Saw-Cutting Existing Surfacing – Saw-Cut First 4-Inch Depth: Payment for saw-cutting associated with work on McVay Highway shall include the trench width cuts and t-cuts as shown on the typical pipe trench detail. Payment for saw-cutting existing surfacing, which includes AC and concrete surfaces, for cuts up to 4 inches in depth will be on a per Linear Foot (LF) basis. The t-cut shall be performed just prior to pavement re-surfacing. No additional payment will be made for sawcutting cement treated base.

A-0197a Saw-Cutting Existing Surfacing - Saw-Cut per Inch Depth Beyond First 4 Inches: Payment for saw-cutting associated with work on McVay Highway shall include the trench width cuts and t-cuts as shown on the typical pipe trench detail. Payment for saw-cutting existing surfacing, which includes AC and concrete surfaces, for cuts 1-inch depth beyond the first 4-inch thickness will be on a per Inch-Linear Foot (IN-LF) basis. The t-cut shall be performed just prior to pavement re-surfacing. No additional payment will be made for sawcutting cement treated base.

A-0257 Furnish and Install 8-Inch Diameter ASTM D3034 SDR 26 PVC Sewer Pipe: Payment for furnishing and installing 8-inch diameter ASTM D3034 SDR 26 PVC sewer pipe will be on a per Linear Foot (LF) basis and will include: trench excavation, hauling, stockpiling, trench shoring, trench dewatering, existing utility protection, coordination and relocation where necessary, furnishing and installing pipe, bedding material, pipe zone material, trench backfill material, compaction, connecting couplings and fittings where required, tracer wire, testing, handling of sewage during construction as may be required, construction surveying and staking, and all other incidental work and materials. Hot mix asphaltic concrete (HMAC) is paid for under the Bid Item for Hot Mix Asphaltic Concrete (HMAC) Trench Pavement, 2-Inch Overlay and 2-Inch Inlay, Level 3, ½-Inch Dense Pavement Restoration, A-0542. General surface restoration, including resurfacing gravel surfaces, is paid for under the Bid Item for General Surface Restoration, A-0069. The Bid Item length will be the horizontal length of new pipe installed as measured from center of manhole to center of manhole.

A-0261 Furnish and Install 18-Inch Diameter ASTM F679 PS115 PVC Sewer Pipe: Payment for furnishing and installing 18-inch Diameter ASTM F679 PS115 PVC sewer pipe will be on a per Linear Foot (LF) basis and will include: trench excavation, hauling, stockpiling, trench shoring, trench dewatering, existing utility protection, coordination and relocation where necessary, furnishing and installing pipe, bedding material, pipe zone material, trench backfill material, compaction, connecting couplings and fittings where required, tracer wire, testing, handling of sewage during construction as may be required, construction surveying and staking, and all other incidental work and materials. Hot mix asphaltic concrete (HMAC) is paid for under the Bid Item for Hot Mix Asphaltic Concrete (HMAC) Trench Pavement, 2-Inch Overlay and 2-Inch Inlay, Level 3, ½-Inch Dense Pavement Restoration, A-0542. General surface restoration, including resurfacing gravel surfaces, is paid for under the Bid Item for General Surface Restoration, A-0069. The Bid Item length will be the horizontal length of new pipe installed as measured from center of manhole to center of manhole.

NOTE: BID ITEM A-0261 IS SUBJECT TO MATERIAL PRICE ESCALATION/DE-ESCALATION, SEE PART 2 OF THIS SECTION.

A-0277 Furnish and Install New 48-Inch Diameter Sanitary Sewer Manholes (0 to 10 Feet Deep): Payment for new 48-inch diameter sanitary sewer manholes associated with work on McVay Highway shall be made at the unit price for Each (EA) manhole and will include up to the first ten feet of the structure measured from the final rim elevation down to the lowest pipe invert elevation in the manhole. The unit price shall be full compensation for the manhole in place including excavation and backfill, cover and frame, piping connections, grout channel, and any other work that may be required for a complete manhole structure, as shown on the drawings.

A-0277a Additional Depth of 48-Inch Diameter Manholes Beyond 10 Feet Deep: Payment for additional depth of 48-inch diameter manholes beyond the first ten feet deep associated with work on McVay Highway will be on a per Foot (FT) basis, in place, complete. Measurement shall be from ten feet below the final rim elevation to the lowest pipe invert elevation in the manhole. No additional payment will be made for any portion of the manhole base located below the lowest pipe invert elevation.

A-0278 Furnish and Install New 60-Inch Diameter Sanitary Sewer Manholes (0 to 10 Feet Deep): Payment for new 60-inch diameter sanitary sewer manholes shall be made at the unit price for Each (EA) manhole and will include up to the first ten feet of the structure measured from the final rim elevation down to the lowest pipe invert elevation in the manhole. The unit price shall be full compensation for the manhole in place including

excavation and backfill, cover and frame, piping connections, grout channel, and any other work that may be required for a complete manhole structure, as shown on the drawings.

A-0278a Additional Depth of 60-Inch Diameter Manholes Beyond 10 Feet Deep: Payment for additional depth of 60-inch diameter manholes beyond the first ten feet deep will be on a per Foot (FT) basis, in place, complete. Measurement shall be from ten feet below the final rim elevation to the lowest pipe invert elevation in the manhole. No additional payment will be made for any portion of the manhole base located below the lowest pipe invert elevation.

A-0279 Furnish and Install New 72-Inch Diameter Sanitary Sewer Manholes (0 to 10 Feet Deep): Payment for new 72-inch diameter sanitary sewer manholes shall be made at the unit price for Each (EA) manhole and will include up to the first ten feet of the structure measured from the final rim elevation down to the lowest pipe invert elevation in the manhole. The unit price shall be full compensation for the manhole in place including excavation and backfill, cover and frame, piping connections, grout channel, and any other work that may be required for a complete manhole structure, as shown on the drawings.

A-0279a Additional Depth of 72-Inch Diameter Manholes Beyond 10 Feet Deep: Payment for additional depth of 72-inch diameter manholes beyond the first ten feet deep will be on a per Foot (FT) basis, in place, complete. Measurement shall be from ten feet below the final rim elevation to the lowest pipe invert elevation in the manhole. No additional payment will be made for any portion of the manhole base located below the lowest pipe invert elevation.

A-0279b Furnish and Install Outside Drop Structure at Manholes: Payment for outside drop structures at manholes will be made on a per Each (EA) basis, regardless of size. The unit price shall include all costs for additional excavation, backfill, pipe and fittings, concrete, controlled density fill (CDF), and all other work required for a complete outside drop structure.

A-0360 Manhole Frame and Cover Adjustment (New and Existing): Payment for manhole frame and cover adjustments associated with work on McVay Highway will be on a per Each (EA) basis, complete, for all new and existing manholes where new asphalt concrete (AC) pavement is placed. The unit price for each manhole frame adjustment shall be full compensation for the final adjusted manhole frame in place including saw cutting and removing asphalt, furnishing and placing rebar, furnishing and placing concrete, and all other work, as shown on the drawings.

A-0542 Hot Mix Asphaltic Concrete (HMAC) Trench Pavement, 2-Inch Overlay and 2-Inch Inlay, Level 3, ½-Inch Dense Pavement Restoration: Payment for Level 3 HMAC Asphalt Concrete trench pavement, 2-inch overlay and 2-inch inlay associated with work on McVay Highway will be on a per Ton (TON) basis. Furnishing and installing temporary paving or its maintenance during construction is considered to be incidental work and no additional payment will be made. Saw cutting shall be paid for under the Bid Item for Saw-Cutting Existing Surfacing – Saw-Cut First 4-Inch Depth, Bid Item A-0197. All other work incidental to existing surfacing replacement shall be included in bid price stated. Payment for this item shall be understood to be full compensation for all work and materials, furnishing and placing tack coat, adjusting permanent castings to proposed grade, hauling, placing HMAC, sand sealing at joints with polymerized seal, screeding, and compacting the HMAC pavement to the depths and locations as shown on the Drawings. No additional payment will be made for the addition of anti-stripping additives

required to attain minimum mix performance and no deduction will be made for the addition of lime to the mixture. Measurements will be based on field measurements and verified by certified weight tickets furnished for each delivery with scales and certification procedures approved by the ENGINEER.

NOTE: BID ITEM A-0542 IS SUBJECT TO MATERIAL PRICE ESCALATION/DE-ESCALATION, SEE PART 2 OF THIS SECTION.

A-0587 Hand Railing: Payment for furnishing and installing hand railing, to include all labor, materials, equipment, and incidental work performed for fabrication, installation and coating of the railing, shall be measured and paid for on a Linear Foot (LF) basis.

A-0617 Permanent Pavement Striping and Marking: Measurement and payment for the replacement of existing permanent pavement striping, markers and symbols that become removed, damaged, or otherwise impacted by construction associated with work on McVay Highway shall be paid for on a Lump Sum (LS) basis, complete. Restoration of permanent pavement striping and marking shall include the removal of existing damaged markings where required, furnishing and installing new thermoplastic markings and symbols and mono or bi-directional pavement markers, and all other incidental work that may be required to completely restore the existing pavement striping markers and symbols to match the existing patterns in accordance with the latest version of the Manual on Uniform Traffic Control Devices (MUTCD) and the requirements of the City of Springfield and Lane County.

A-0861 Control Density Fill (CDF) Trench Backfill: Payment for furnishing and placing control density fill (CDF) trench backfill will be made on a per Cubic Yard (CY) basis where shown on the plans or as approved and directed by the ENGINEER. Payment will be in addition to the linear foot bid price paid for the various pipe installation Bid Items with crushed rock backfill. Payment will be made for the actual quantity of CDF installed as measured in the field and verified with truck delivery receipts.

Schedule B – Springfield Utility Board Waterline and Electrical Facilities

Item No.	Description
B-0007	Flushing/Testing/Chlorination: Measurement and payment for flushing/testing/chlorination shall be paid for on a Lump Sum (LS) basis, complete. Payment for flushing/testing/chlorination shall constitute full compensation for all labor, equipment, water, chemicals, dechlorination methods, and any incidental expenses necessary to prepare the water line for use.
B-0073	Trench Foundation Over Excavation and Subgrade Stabilization: Payment for over excavation and subgrade stabilization for unsuitable trench foundation conditions associated with work on McVay Highway will only be considered as approved by the ENGINEER, but when such pre-approval is obtained, payment will be made on a per Cubic Yard (CY) basis according to the volume of material excavated, measured by neat line at the location of the excavation, to the nearest 0.1 cubic yard. Price provided by the CONTRACTOR shall include the price for excavating beyond the normal Bid Item limits to the limits pre-approved by the ENGINEER, disposal of excavated material, furnishing and installing subgrade geotextile fabric, furnishing, placing and compacting crushed rock stabilization material in the excavated void.
B-0076	Trench Rock Excavation: Payment for trench rock excavation associated with work on McVay Highway will be made at the unit price per Cubic Yard (CY) of rock excavated and

rock excavation will be paid for in addition to the lineal foot price for pipe, trench excavation and backfill. The Bid Item limits for pipe trench shall be 12 inches below the pipe invert and the width shall be the nominal pipe diameter plus 1 foot on each side of the pipe. Bid Item limits for manholes and other structures shall be to the depth necessary to install the structure and to a maximum of 18 inches beyond the outside walls of the manhole or structure. No payment will be made for trench rock excavation beyond these limits. Payment for the removal of cement treated base (CTB), when classified as rock as defined in Special Provisions, Section I - Earthwork, will be made at the unit price per Cubic Yard (CY) and have the Bid Item limits described for trench rock excavation.

B-0197 Saw-Cutting Existing Surfacing – Saw-Cut First 4-Inch Depth: Payment for saw-cutting associated with work on McVay Highway shall include the trench width cuts and t-cuts as shown on the typical pipe trench detail. Payment for saw-cutting existing surfacing, which includes AC and concrete surfaces, for cuts up to 4 inches in depth will be on a per Linear Foot (LF) basis. The t-cut shall be performed just prior to pavement re-surfacing. No additional payment will be made for sawcutting cement treated base.

B-0197a Saw-Cutting Existing Surfacing - Saw-Cut per Inch Depth Beyond First 4 Inches: Payment for saw-cutting associated with work on McVay Highway shall include the trench width cuts and t-cuts as shown on the typical pipe trench detail. Payment for saw-cutting existing surfacing, which includes AC and concrete surfaces, for cuts 1-inch depth beyond the first 4-inch thickness will be on a per Inch-Linear Foot (IN-LF) basis. The t-cut shall be performed just prior to pavement re-surfacing. No additional payment will be made for sawcutting cement treated base.

B-0254 Furnish and Install 2-Inch and 4-Inch Conduit (Own Trench): Payment for furnishing and installing 2-inch and 4-inch conduit in their own trench shall be made at the unit contract price per Linear Foot (LF) for each conduit listed on the Plans as actually installed. The measure for payment will be the field measured centerline length of the conduit in place within the limits shown on the Plans. Payment for conduit installation shall constitute full compensation for all labor, equipment, clearing the construction area, trench excavation (except rock excavation), bedding, and back-fill operations, conduit, sweeps, caps, solvent weld, mule tape, and any incidental expenses necessary to prepare the constructed conduit for use.

B-0254a Furnish and Install 2-Inch Conduit (Joint Trench With Water Line): Furnishing 2-inch conduit in a joint trench with the water line shall be made at the unit contract price per Linear Foot (LF) for the various types and sizes of conduit listed on the Plans as actually installed. The measure for payment will be the field measured centerline length of the conduit in place within the limits shown. Payment for conduit installation shall constitute full compensation for all labor, equipment, sweeps, and any incidental expenses necessary to prepare the constructed conduit for use. Excavation (except rock excavation), bedding, and back-fill operations of 2-inch joint trench conduit shall be considered incidental to the Bid Item for Furnish and Install 16-inch Ductile Iron Pipe, B-0707.

B-0254b Furnish and Install 4-Inch Conduit (Joint Trench With Water Line): Furnishing 4-inch conduit in a joint trench with the water line shall be made at the unit contract price per Linear Foot (LF) for the various types and sizes of conduit actually installed. The measure for payment will be the field measured centerline length of the conduit in place within the limits shown. Payment for conduit installation shall constitute full compensation for all labor, equipment, sweeps, caps, solvent weld, mule tape, and any incidental expenses necessary to prepare the constructed conduit for use. Excavation (except rock

excavation), bedding, and back-fill operations of 4-inch joint trench conduit shall be considered incidental to the Bid Item for Furnish and Install 16-inch Ductile Iron Pipe, B-0707.

B-0255 Furnish and Install UPRR Crossing (Electric): Measurement and payment for furnishing and installing UPRR crossing (Electric) shall be paid for on a Lump Sum (LS) basis. Measurement of the UPRR crossing shall be limited to the UPRR right-of-way. Payment for UPRR crossing installation shall constitute full compensation for all labor, equipment, clearing the construction area, trench excavation (except rock excavation), bedding, back-fill operations, bore spacers, 24-inch steel casing, anodes, thermally conductive grout/slurry, 2-inch conduit, 4-inch conduit, mule tape, and any incidental expenses necessary to prepare the constructed casing and its contents for use.

B-0706 Furnish and Install UPRR Crossing (Water): Measurement and payment for furnishing and installing UPRR crossing (Water) shall be paid for on a Lump Sum (LS) basis, complete. Measurement of the UPRR crossing shall be limited to the UPRR right-of-way. Payment for UPRR crossing installation shall constitute full compensation for all labor, equipment, clearing the construction area, trench excavation (except rock excavation), bedding, back-fill operations, casing spacers, 30-inch steel casing, 16-inch restrained ductile iron pipe, anodes, 2-inch conduit, mule tape, and any incidental expenses necessary to prepare the constructed casing and its contents for use.

B-0707 Furnish and Install 16-Inch Ductile Iron Pipe: Payment for furnishing and installing 16-inch ductile iron pipe shall be made per Linear Foot (LF) as actually installed. The measure for payment will be the field measured centerline length of the pipe in place within the limits shown on the Plans. Payment for pipe installation shall constitute full compensation for all labor, equipment, clearing the construction area, trench excavation (except rock excavation), bedding, and back-fill operations, thrust restraint devices, and any incidental expenses necessary to prepare the constructed water line for use and connection to the existing water distribution system.

B-0708 Furnish and Install 16-Inch Butterfly Valve: Payment for furnishing and installing 16-inch Butterfly valves shall be made at the unit price for Each (EA) valve. The unit price shall be full compensation for the valve, complete including: excavation (except rock excavation), back-fill, mechanical joint restraints, flange kits, valve box, valve lid, valve insert, valve riser, and any other incidental expenses necessary to complete the installation.

B-0709 Furnish and Install 16-Inch 90 Degree Bend: Payment for furnishing and installing 16-inch 90 degree bend shall be made at the unit price for Each (EA) fitting. The unit price shall be full compensation for the fitting, complete including: labor, equipment, clearing the construction area, trench excavation (except rock excavation), bedding, back-fill operations, mechanical restraint devices, and any other incidental expenses necessary to complete the installation.

B-0710 Furnish and Install/Removal of 1-Inch Temporary Chlorination Point: Payment for furnishing and install/removal of a 1-inch temporary chlorination point shall be made at the unit price for Each (EA) point. The unit price shall be full compensation for the point, complete including: clearing the construction area, excavation (except rock excavation), back-fill operations, 1-inch corporation stop, 1-inch angle meter valve, 1-inch poly pipe, 1-inch pipe stiffeners, and 1-inch "CC" plug. Any additional appurtenances required to provide a fully functional chlorination access point to the new waterline for the purposes of chlorinating/testing the waterline shall be considered incidental.

B-0711 Furnish and Install 16-Inch x 2-Inch Plug: Payment for furnishing and installing 16-inch x 2-inch plug shall be made at the unit price for Each (EA) plug. The unit price shall be full compensation for the fitting, complete including: excavation (except rock excavation), back-fill operations, mechanical joint restraint devices, 2-inch brass plug, and any other incidental expenses necessary to complete the installation.

B-0712 Furnish and Install 16-Inch x 2-Inch Cap: Payment for furnishing and installing 16-inch x 2-inch cap shall be made at the unit price for Each (EA) cap. The unit price shall be full compensation for the fitting, complete including: excavation (except rock excavation), back-fill operations, mechanical joint restraint devices, 2-inch brass plug, and any other incidental expenses necessary to complete the installation.

B-0713 Furnish and Install 6-Inch Flush Point: Payment for furnishing and installing a 6-inch flush point shall be made at the unit price for Each (EA) flush point. The unit price shall be full compensation for the flush point, in place, including excavation (except rock excavation), back-fill operations, 6-inch ductile iron pipe, 6-inch gate valve, 6-inch flange kits, tees, 6-inch 90 degree bends, mechanical thrust restraint devices, 6-inch spool piece, storz adapter, storz cap, locate wire, 2-inch meter box, and any other incidental expenses necessary to complete the installation.

B-0714 Furnish and Install 16-Inch x 16-Inch Tee: Payment for furnishing and installing 16-inch x 16-inch tee shall be made at the unit price for Each (EA) tee. Payment for tee installations shall constitute full compensation for all labor, equipment, clearing the construction area, trench excavation (except rock excavation), bedding, back-fill operations, mechanical restraint devices, flange kits, and any other incidental expenses necessary to complete the installation.

B-0861 Control Density Fill (CDF) Trench Backfill: Payment for furnishing and placing control density fill (CDF) trench backfill will be made on a per Cubic Yard (CY) basis where shown on the plans or as approved and directed by the ENGINEER. Payment will be in addition to the linear foot bid price paid for the various pipe installation Bid Items with crushed rock backfill. Payment will be made for the actual quantity of CDF installed as measured in the field and verified with truck delivery receipts.

Schedule C - Additive Alternate – Work associated with the new sewer main on East 19th Ave., Station A0+00 to A9+33 and the modifications to the Nugget Way pump station and forcemain are included as an Additive Alternate.

Item No.	Description
C-0006	Internal Sewer Video Inspection: Payment for internal sewer video inspection associated with work on E. 19th Avenue, including all equipment, inspection reports and the DVD of the inspection, will be on a Lump Sum (LS) basis.
C-0058	Contaminated Soil Excavation and Disposal: Measurement and payment for the excavation and disposal of contaminated soil associated with work on E. 19th Avenue will be made on a per Cubic Yard (CY) basis. Payment shall include all labor, equipment and material, excavation, stockpiling, pretreatment, transportation, disposal, notifications, fees, permits and CONTRACTOR standby time. This item covers payment for soil that is contaminated by petroleum based contaminants only that can be disposed of at a municipal solid waste facility permitted to accept such material. Material that is contaminated with other contaminants requiring disposal in a separate special waste facility, based on sampling and testing, is not covered in this Bid Item and will be covered by a negotiated change order to the contract.

C-0058a Contaminated Groundwater Mitigation: Measurement and payment for the pre-treatment and/or removal and disposal of contaminated groundwater associated with work on E. 19th Avenue will be made on a per Gallon (GAL) basis. Payment shall include all labor, equipment and material required for dewatering, storage, pretreatment, transportation, disposal, notifications, reporting, fees, permits and CONTRACTOR standby time. This item covers payment for groundwater that is contaminated by petroleum based contaminants only that can be treated and discharged to the sanitary sewer system or disposed of at a municipal solid waste facility permitted to accept such material. Material that is contaminated with other contaminants requiring disposal in a separate special waste facility, based on sampling and testing, is not covered in this Bid Item and will be covered by a negotiated change order to the contract.

C-0064 Erosion Control: Measurement and payment for temporary construction site erosion and sedimentation control measures associated with work on E. 19th Avenue shall be on a Lump Sum (LS) basis. The Lump Sum (LS) price shall include compensation for all planning, design, labor, equipment and materials for construction site erosion and sedimentation control measures all in accordance with current requirements and regulations of the City of Springfield, Lane County, the Department of Environmental Quality, and any other government agencies with jurisdiction over the project and in accordance with the City of Springfield's NPDES 1200-CA Permit.

C-0061 Temporary Traffic Control: Payment for traffic control, maintenance and protection associated with work on E. 19th Avenue including all coordination, materials, business access signs, project information signs, removing and replacing existing signs where required including replacing sign support posts, traffic control devices, labor and equipment, temporary pavement markings and striping, portable changeable message signs, flagging and all other temporary traffic control, as required, will be on a Lump Sum (LS) basis.

C-0069 General Surface Restoration: Payment for all required general surface restoration, other than streets, sidewalks and curbs, including stripping and stockpiling topsoil, re-grading to original elevation, bark mulching planting areas, repairing landscaped areas, seeding and cleanup following construction associated with work on E. 19th Avenue including resurfacing gravel surfaces as required, will be on a Lump Sum (LS) basis.

C-0072a Cold Plane Pavement Removal – 0-Inch to 2-Inch Depth: Payment for taper grind area required at the transition between grind and inlay and overlay at the intersection of E. 19th Avenue and Nugget Way and at asphalt approaches will be on a per Square Yard (SY) basis. Measurement shall be of the total area ground, calculated by the ENGINEER using field measurements. Disposal of existing AC surfacing shall be considered incidental to this item. Temporary removal and reinstallation of castings shall be considered incidental to this Bid Item.

C-0073 Trench Foundation Over Excavation and Subgrade Stabilization: Payment for over excavation and subgrade stabilization for unsuitable trench foundation conditions associated with work on E. 19th Avenue will only be considered as approved by the ENGINEER, but when such pre-approval is obtained, payment will be made on a per Cubic Yard (CY) basis according to the volume of material excavated, measured by neat line at the location of the excavation, to the nearest 0.1 cubic yard. Price provided by the CONTRACTOR shall include the price for excavating beyond the normal Bid Item limits to the limits pre-approved by the ENGINEER, disposal of excavated material, furnishing and installing subgrade geotextile fabric, furnishing, placing and compacting crushed rock stabilization material in the excavated void.

C-0076 Trench Rock Excavation: Payment for trench rock excavation associated with work on E. 19th Avenue will be made at the unit price per Cubic Yard (CY) of rock excavated and rock excavation will be paid for in addition to the lineal foot price for pipe, trench excavation and backfill. The Bid Item limits for pipe trench shall be 12 inches below the pipe invert and the width shall be the nominal pipe diameter plus 1 foot on each side of the pipe. Bid Item limits for manholes and other structures shall be to the depth necessary to install the structure and to a maximum of 18 inches beyond the outside walls of the manhole or structure. No payment will be made for trench rock excavation beyond these limits. Payment for the removal of cement treated base (CTB), when classified as rock as defined in Special Provisions, Section I - Earthwork, will be made at the unit price per Cubic Yard (CY) and have the Bid Item limits described for trench rock excavation.

C-0126 Asphalt Approach: Payment for asphalt approaches for driveways and side streets associated with work on E. 19th Avenue will be on a per Each (EA) basis. The unit price shall include all work and materials required to construct the asphalt approach including excavation, grading, backfill, compaction and all other work as required. Payment will be payment in full for all extra or additional costs involved in placing asphalt concrete in the asphalt approach. These costs are in addition to those which are included in HMAC incorporated into the approach. HMAC required for asphalt approaches will be paid for under the Bid Item for Hot Mix Asphaltic Concrete (HMAC) Trench Pavement, 2-Inch Overlay, Level 3, ½-Inch Dense Pavement Restoration, C-0542.

C-0197 Saw-Cutting Existing Surfacing – Saw-Cut First 4-Inch Depth: Payment for saw-cutting associated with work on E. 19th Avenue shall include the trench width cuts and t-cuts as shown on the typical pipe trench detail. Payment for saw-cutting existing surfacing, which includes AC and concrete surfaces, for cuts up to 4 inches in depth will be on a per Linear Foot (LF) basis. The t-cut shall be performed just prior to pavement re-surfacing. No additional payment will be made for sawcutting cement treated base.

C-0197a Saw-Cutting Existing Surfacing - Saw-Cut per Inch Depth Beyond First 4 Inches: Payment for saw-cutting associated with work on E. 19th Avenue shall include the trench width cuts and t-cuts as shown on the typical pipe trench detail. Payment for saw-cutting existing surfacing, which includes AC and concrete surfaces, for cuts 1-inch depth beyond the first 4-inch thickness will be on a per Inch-Linear Foot (IN-LF) basis. The t-cut shall be performed just prior to pavement re-surfacing. No additional payment will be made for sawcutting cement treated base.

C-0251 Modifications to Nugget Way Pump Station and Force Main: Payment for this item shall be on a Lump Sum (LS) basis and shall include all particular elements for the improvements to the Nugget Way Pump Station, whether or not specifically or specially identified, as specified herein, in the contract documents and as shown on the plans and shall include, but shall not be limited to the following: pumps and pump appurtenances, pump station piping, force main piping and fittings, electrical modifications, modifications to the wet well, bypass pumping, site restoration, connections to the force main discharge manhole and all work inside the force main discharge manhole required to make the force main connections to the manhole. Payment shall be full and complete compensation for all work shown in the drawings and other work required to provide complete and usable facilities including materials, equipment, and labor for construction not included in other Bid Items. Payment shall also include the furnishing of all required record drawings, operation and maintenance manuals, and other documents, certifications and reporting specified herein.

C-0256 Furnish and Install 6-Inch Diameter ASTM D3034 SDR 35 PVC Sewer Laterals: Payment for furnishing and installing 6-Inch Diameter ASTM D3034 SDR 35 PVC Sewer Laterals will be on a per Linear Foot (LF) basis and will include: trench excavation, hauling, stockpiling, trench shoring, trench dewatering, existing utility protection, coordination and relocation where necessary, furnishing and installing pipe, bedding material, pipe zone material, trench backfill material, compaction, connecting couplings and fittings where required, tracer wire, testing, handling of sewage during construction as may be required, construction surveying and staking, and all other incidental work and materials. Hot mix asphaltic concrete (HMAC) is paid for under the Bid Item for Hot Mix Asphaltic Concrete (HMAC) Trench Pavement, 2-Inch Overlay and 2-Inch Inlay, Level 3, ½-Inch Dense Pavement Restoration, C-0542. General surface restoration, including resurfacing gravel surfaces, is paid for under the Bid Item for General Surface Restoration, C-0069. The Bid Item length will be the horizontal length of new pipe installed as measured from center of manhole to center of manhole.

C-0259 Furnish and Install 12-Inch Diameter ASTM D3034 SDR 26 PVC Sewer Pipe: Payment for furnishing and installing 12-Inch Diameter ASTM D3034 SDR 26 PVC Sewer Pipe will be on a per Linear Foot (LF) basis and will include: trench excavation, hauling, stockpiling, trench shoring, trench dewatering, existing utility protection, coordination and relocation where necessary, furnishing and installing pipe, bedding material, pipe zone material, trench backfill material, compaction, connecting couplings and fittings where required, tracer wire, testing, handling of sewage during construction as may be required, construction surveying and staking, and all other incidental work and materials. Hot mix asphaltic concrete (HMAC) is paid for under the Bid Item for Hot Mix Asphaltic Concrete (HMAC) Trench Pavement, 2-Inch Overlay and 2-Inch Inlay, Level 3, ½-Inch Dense Pavement Restoration, C-0542. General surface restoration, including resurfacing gravel surfaces, is paid for under the Bid Item for General Surface Restoration, C-0069. The Bid Item length will be the horizontal length of new pipe installed as measured from center of manhole to center of manhole.

NOTE: BID ITEM C-0259 IS SUBJECT TO MATERIAL PRICE ESCALATION/DE-ESCALATION, SEE PART 2 OF THIS SECTION.

C-0277 Furnish and Install New 48-Inch Diameter Sanitary Sewer Manholes (0 to 10 Feet Deep): Payment for new 48-inch diameter sanitary sewer manholes associated with work on E. 19th Avenue shall be made at the unit price for Each (EA) manhole and will include up to the first ten feet of the structure measured from the final rim elevation down to the lowest pipe invert elevation in the manhole. The unit price shall be full compensation for the manhole in place including excavation and backfill, cover and frame, piping connections, grout channel, and any other work that may be required for a complete manhole structure, as shown on the drawings.

C-0277a Additional Depth of 48-Inch Diameter Manholes Beyond 10 Feet Deep: Payment for additional depth of 48-inch diameter manholes beyond the first ten feet deep associated with work on E. 19th Avenue will be on a per Foot (FT) basis, in place, complete. Measurement shall be from ten feet below the final rim elevation to the lowest pipe invert elevation in the manhole. No additional payment will be made for any portion of the manhole base located below the lowest pipe invert elevation.

C-0278 Furnish and Install New 60-Inch Diameter Sanitary Sewer Manholes (0 to 10 Feet Deep): Payment for new 60-inch diameter sanitary sewer manholes shall be made at the unit price for Each (EA) manhole and will include up to the first ten feet of the structure measured from the final rim elevation down to the lowest pipe invert elevation in the manhole. The unit price shall be full compensation for the manhole in place including

excavation and backfill, cover and frame, piping connections, grout channel, and any other work that may be required for a complete manhole structure, as shown on the drawings.

C-0360 Manhole Frame and Cover Adjustment (New and Existing): Payment for manhole frame and cover adjustments associated with work on E. 19th Avenue will be on a per Each (EA) basis, complete, for all new and existing manholes where new asphalt concrete (AC) pavement is placed. The unit price for each manhole frame adjustment shall be full compensation for the final adjusted manhole frame in place including saw cutting and removing asphalt, furnishing and placing rebar, furnishing and placing concrete, and all other work.

C-0457 6-Inch x 12-Inch x 12-Inch ASTM D3034 Tee: Payment for furnishing and installing 6-inch x 12-inch x 12-inch Tee shall be made at the unit price for Each (EA) tee. Payment for tee installations shall constitute full compensation for all labor, equipment, clearing the construction area, trench excavation (except rock excavation), bedding, back-fill operations and any other incidental expenses necessary to complete the installation.

C-0542 Hot Mix Asphaltic Concrete (HMAC) Trench Pavement, 2-Inch Overlay, Level 3, ½-Inch Dense Pavement Restoration: Payment for Level 3 HMAC Asphalt Concrete trench pavement, 2-inch overlay associated with work on E. 19th Avenue will be on a per Ton (TON) basis. Furnishing and installing temporary paving or its maintenance during construction is considered to be incidental work and no additional payment will be made. Saw cutting shall be paid for under the Bid Item for Saw-Cutting Existing Surfacing – Saw-Cut First 4-Inch Depth, Bid Item C-0197. All other work incidental to existing surfacing replacement shall be included in bid price stated. Payment for this item shall be understood to be full compensation for all work and materials, furnishing and placing tack coat, adjusting permanent castings to proposed grade, hauling, placing HMAC, sand sealing at joints with polymerized seal, screeding, and compacting the HMAC pavement to the depths and locations as shown on the Drawings. No additional payment will be made for the addition of anti-stripping additives required to attain minimum mix performance and no deduction will be made for the addition of lime to the mixture. Measurements will be based on field measurements and verified by certified weight tickets furnished for each delivery with scales and certification procedures approved by the ENGINEER.

NOTE: BID ITEM C-0542 IS SUBJECT TO MATERIAL PRICE ESCALATION/DE-ESCALATION, SEE PART 2 OF THIS SECTION.

C-0617 Permanent Pavement Striping and Marking: Measurement and payment for the replacement of existing permanent pavement striping, markers and symbols that become removed, damaged, or otherwise impacted by construction associated with work on E. 19th Avenue shall be paid for on a Lump Sum (LS) basis, complete. Restoration of permanent pavement striping and marking shall include the removal of existing damaged markings where required, furnishing and installing new thermoplastic markings and symbols and mono or bi-directional pavement markers, and all other incidental work that may be required to completely restore the existing pavement striping markers and symbols to match the existing patterns in accordance with the latest version of the Manual on Uniform Traffic Control Devices (MUTCD) and the requirements of the City of Springfield and Lane County.

PART 2 MATERIAL PRICE ESCALATION/DE-ESCALATION

Certain Bid Items in this project will be subject to the requirements of material price escalation/de-escalation.

2.1 Asphalt Cement Material Price Escalation/De-escalation

An asphalt cement escalation/de-escalation clause will be in effect during the life of the Contract.

A. Monthly Asphalt Cement Material Price (MACMP)
The Monthly Asphalt Cement Material Price (MACMP) will be established by the Oregon Department of Transportation (ODOT) each month. For information regarding the calculation of the MACMP, and for the actual MACMP, go to the ODOT website at:

http://www.oregon.gov/ODOT/HWY/ESTIMATING/Pages/asphalt_fuel.aspx

If the ODOT selected index ceases to be available for any reason, the ENGINEER in its discretion will select and begin using a substitute price source or index to establish the MACMP each month. The MACMP will apply to all asphalt cement including but not limited to paving grade, polymer modified, and emulsified asphalts, and recycling agents. There is no guarantee that asphalt cement will be available at the MACMP.

B. Base Asphalt Cement Material Price (Base)

The Base asphalt cement material price for this project is the MACMP published on the ODOT website for the month immediately preceding the bid opening date.

C. Monthly Asphalt Cement Adjustment Factor

The Monthly Asphalt Cement Adjustment Factor will be determined each month as follows:

- If the MACMP is within ± 5% of the Base, there will be no adjustment.
- If the MACMP is more than 105% of the Base, then:

  Adjustment Factor = (MACMP) - (1.05 x Base)

  If the MACMP is less than 95% of the Base, then:

  Adjustment Factor = (MACMP) - (0.95 x Base)

D. Asphalt Cement Price Adjustment

A price adjustment will be made for the items containing asphalt cement listed below. The price adjustment as calculated in Paragraph C above will use the MACMP for the month the asphalt is incorporated into the project. The price adjustment will be determined by multiplying the amount of asphalt incorporated into the subject Bid Items during the month by the Adjustment Factor.

The Bid Items for which price adjustments will be made are:

BID ITEM DESCRIPTION

A-0542 Hot Mix Asphaltic Concrete (HMAC) Trench Pavement, 2-Inch Overlay and 2-Inch Inlay, Level 3, ½-Inch Dense Pavement Restoration

C-0542 Hot Mix Asphaltic Concrete (HMAC) Trench Pavement, 2-Inch Overlay, Level 3, ½-Inch Dense Pavement Restoration

2.2 PVC Material Price Escalation/De-Escalation Clause

A PVC escalation/de-escalation clause will be in effect during the life of the Contract.

A. Monthly PVC Materials Value (MV) and Base PVC Materials Value (BV)
The Monthly PVC Materials Value (MV) will be established by McGraw-Hill ENGINEERing News Record (ENR) from the monthly published price for 8-inch diameter PVC sewer pipe for Seattle, Washington.

The Base PVC Materials Value (BV) for this Project will be the MV published in the June 2014 ENR magazine. The MV and BV will be available at the ENR website at:

http://enr.construction.com/

If the selected index ceases to be available for any reason, the ENGINEER in its discretion will select and begin using a substitute price source or index to establish the MV each month. The ENGINEER makes no guarantee that PVC material will be available at any stated or implied materials price.

B. Monthly PVC Materials Price Adjustment

A PVC price adjustment evaluation will be made for the PVC pipe. No adjustments will be made using the BV or MV until such time as they are listed as final values by ENR. The price adjustment as calculated in this provision for the PVC pipe will use the MV for the month that the pipe is ordered from the pipe manufacturer/supplier, thus establishing a price for the pipe. The CONTRACTOR shall submit copies of invoices from the pipe manufacturer/supplier that shows the date the materials were ordered, the quantities of pipe materials and the price of the pipe. A price adjustment for the PVC pipe will be considered as per the above. A price adjustment for the PVC Bid Items will only be made if the MV for the month that the pipe is purchased differs by more than 5% from the BV. A PVC materials price adjustment will be made for the PVC pipe Bid Items identified below only.

The Monthly PVC Materials Price Adjustment will be determined as follows:

- If the MV is within 5% ± of the BV, there will be no adjustment.
- If the MV is more than 105% of the BV, then:

  PA = (((MV-BV) ÷ BV) - 0.05) x ((BV ÷ MV) x (PIP))

- If the MV is less than 95% of the BV, then:

  PA = (((MV-BV) ÷ BV) + 0.05) x ((BV ÷ MV) x (PIP))

Where:

PA = Price Adjustment, dollars
MV = Monthly PVC Materials Value from ENR for 8-inch diameter PVC sewer pipe for Seattle, Washington for the month determined above
BV = Base PVC Materials Value from ENR for 8-inch diameter PVC sewer pipe for Seattle, Washington from month of the bid opening
PIP = Amount paid for PVC pipe material only, based on invoices provided by the CONTRACTOR, for the month for which the adjustment is made

C. PVC Materials Bid Items

A PVC material price adjustment for fluctuations in the cost of PVC will apply only to the major PVC usage Bid Items shown in the following list:

BID ITEM DESCRIPTION

A-0261 Furnish and Install 18-Inch Diameter ASTM F679 PS115 PVC Sewer Pipe

C-0259 Furnish and Install 12-Inch Diameter ASTM D3034 SDR 26 PVC Sewer Pipe

D. Regardless of the number of Bid Items listed, the PVC price escalation/de-escalation clause (and program) contained in this Section are included in this Contract and are the only PVC price escalation/de-escalation clause (and program) that apply to this Contract.

END OF SECTION

SPECIAL PROVISIONS

SECTION D – Submittals

P21080 Franklin/McVay Sanitary Sewer Extension

D1. General

The CONTRACTOR shall provide submittals including shop drawings, schedules, drawings, and such other information as may be necessary for the prosecution of the work in the shop and in the field as required by the contract documents or the ENGINEER's instruction. There may be other submittals required elsewhere in these Specifications that are not necessarily included or mentioned in this Section.

Within fourteen days after award of the contract, the CONTRACTOR shall submit to the ENGINEER a proposed list of manufacturers, suppliers, and subcontractors and a schedule of specific target dates for the submission and return of shop drawings required by the contract documents. The list and schedule shall be updated and re-submitted when requested by the ENGINEER. All shop drawings for interrelated items shall be scheduled for submission at the same time. Not less than one (1) week shall be allocated to each submittal for processing by the ENGINEER. At least six (6) copies of all submittals shall be provided to the ENGINEER. Four (4) copies of all submittals will be kept by the ENGINEER. If the CONTRACTOR requests that more than two (2) copies be returned, then the CONTRACTOR shall submit the appropriate quantity of submittals.

The ENGINEER will review shop drawings to determine compliance with the design concept of the project and return them to the CONTRACTOR within the period established in the shop drawings schedule. The ENGINEER may hold shop drawings in cases where partial submission cannot be reviewed until the complete submission has been received or where shop drawings cannot be reviewed until correlated items affected by them have been received. When such shop drawings are held, the ENGINEER will advise the CONTRACTOR in writing that the shop drawing submitted will not be reviewed until shop drawings for all related items have been received.

The CONTRACTOR shall submit to the ENGINEER, for review, six (6) copies of shop drawings, electrical diagrams and catalog information for fabricated items and manufactured items required for construction. The ENGINEER will review the submitted data and shop drawings, and will make notations thereon indicating "No Exception Taken", "Make Corrections Noted", "Rejected", "Revise and Resubmit", or "Submit Specified Item". The ENGINEER will then return two copies of the submitted data and shop drawings to the CONTRACTOR. The ENGINEER's review of submittals and shop drawings is not a check of any dimension or quantity, and will not relieve the CONTRACTOR from responsibility for errors of any sort in the submittals and shop drawings.

When shop drawings and/or submittals are required to be revised or corrected and resubmitted, the CONTRACTOR shall make such revisions and/or corrections and resubmit those items or other materials in the same manner as specified above.

Submitted data shall be sufficient in detail for determination of compliance with the Contract Documents. Color samples for all items for which colors are to be selected shall be submitted at the same time. No equipment or material for which listings, drawings, or descriptive material is required shall be installed until the CONTRACTOR has received review from the ENGINEER.

Regardless of corrections made in or review given to the drawings by the ENGINEER, the CONTRACTOR shall be responsible for the accuracy of such drawings and for their conformity to the drawings and

specifications. The CONTRACTOR shall check all submittals before submitting them to the ENGINEER and shall stamp its approval on all copies of the shop drawing documents. Any submittals received by the ENGINEER which do not bear the CONTRACTOR's approval shall be returned without review. If more than two (2) submissions are required to meet the project specifications, the cost of reviewing these additional submissions may be charged directly against the CONTRACTOR and the OWNER may withhold the funds necessary to cover these costs.

Materials and equipment shall be ordered a sufficient time in advance to allow time for reviews, and shall be available on the job when needed. Last minute review will not be given for inferior substitutes for material or equipment.

Required submittals include items listed below. This list is provided for CONTRACTOR's convenience only and may not be complete in all respects. CONTRACTOR shall provide all submittals required, whether or not specifically listed herein.

A. Schedules – Prior to or at the Preconstruction Meeting CONTRACTOR shall submit for written approval a proposed construction schedule to the ENGINEER. If it is desirable to carry on operations in more than one location simultaneously, a schedule shall be submitted for each location two weeks in advance of beginning such operations. In the event that the CONTRACTOR's proposed construction schedule does not meet the necessary construction program schedule as determined by OWNER, the CONTRACTOR shall resubmit a schedule that conforms as approved.

The schedule shall show the proposed order of work and indicate the time required for completion of the major items of work. This working schedule shall take into account the passage or handling of traffic with the least practicable interference therewith and the orderly, timely and efficient prosecution of work. It will also be used as an indication of the sequence of the major construction operations and as a check on the progress of work, but does not become a part of the Contract.

The CONTRACTOR shall provide weekly progress schedules of expected project activities. The progress schedules shall indicate the CONTRACTOR's plan of prosecution of the work in sufficient detail to enable both the CONTRACTOR and the ENGINEER to plan, coordinate, appraise, document, and control their respective Contract responsibilities. Any work done without notification to the ENGINEER is subject to rejection.

The Schedule shall show the order in which the CONTRACTOR proposes to carry out the work, the dates on which the important features of the work will start, and the contemplated dates for completing same. In addition to a time-scaled bar chart schedule depicting the project critical path, the CONTRACTOR shall submit a detailed CPM logic diagram. The CPM diagram and time-scaled bar chart shall include the following:

- Construction activities
- Submittal and approval of material samples and shop drawings
- Procurement of critical materials
- Fabrication, installation, and testing of special material and equipment
- Duration of work, including completion times of all stages and their sub-phases

The activities shall be separately identifiable by coding or use of sub-networks or both. The duration of each activity shall be verifiable by manpower and equipment allocation, in common units of measure, or by delivery dates and shall be justifiable by the CONTRACTOR upon the request of the ENGINEER.

Detailed subnetworks will include all necessary activities and logic connectors to describe the work and all restrictions to it. In the restraints, include those activities from the project schedule which initiated the subnetwork as well as those restrained by it.

Include a tabulation of each activity in the computer mathematical analysis of the network diagram. Furnish the following information as a minimum for each activity:

- Event (node) number(s) for each activity
- Activity description
- Original duration of activities (in normal workdays)
- Estimated remaining duration of activities (in normal workdays)
- Earliest start date or actual start date (by calendar date)
- Earliest finish date or actual finish date (by calendar date)
- Latest start date (by calendar date)
- Latest finish date (by calendar date)
- Slack or float time (in workdays)

Computer printouts shall consist of at least a node sort and an "early start/total-float" sort.

CONTRACTOR'S attention is drawn to typical local climatic weather patterns and the CONTRACTOR shall coordinate work accordingly.

B. Breakdown of Contract Price -- The CONTRACTOR shall, at the preconstruction meeting, submit a complete breakdown of all lump sum bid items showing the value assigned to each part of the work including an allowance for profit and overhead adding up to the total lump sum contract price. Breakdown of lump sum bids shall be coordinated with the items in the schedule. Preparatory work, bonds, and insurance required in setting up the job will be allowed as a separate entry on the cost breakdown but shall not exceed 5 percent of the total base bid. Upon acceptance of the breakdown of the contract price by the ENGINEER, it shall be used as the basis for all requests for payment.

C. Shop Drawings, Schedules and Drawings -- The CONTRACTOR shall provide shop drawings, schedules and such other drawings and information as may be necessary for the prosecution of the work in the shop and in the field as required by the contract documents and/or ENGINEER's instruction.

D. Design Submittals -- Design submittals as may be required for equipment and systems elsewhere in these Specifications.

E. Erosion and Sedimentation Control Plan (ESCP) -- The CONTRACTOR shall submit an ESCP conforming to the requirements of the City's NPDES 1200-CA Permit.

F. Materials Lists

G. CONTRACTOR Contact Persons

H. Material Safety Data Sheets

I. Proposed modifications to approved Traffic Control and Protection Plans for work in City and County right-of-way.

J. Miscellaneous Materials, Equipment, and Other Submittals as Required Elsewhere in the Specifications

K. Operation and Maintenance Instructions

Before acceptance of the installation, the CONTRACTOR shall submit four (4) copies of complete operation and maintenance instructions for all equipment supplied. Submit items in 8-1/2 x 11-inch heavy-duty three-ring binders when appropriate, or in 8-1/2 x 11-inch file folders. All binders and folders shall have clear plastic pockets on the front of the cover and the spine to allow for insertion of identifying information. The equipment manufacturer may furnish instruction manuals prepared specifically for the equipment furnished or standard manuals may be used if statements like "if your equipment has this accessory..." or listings of equipment not furnished are eliminated. Poorly reproduced copies are not acceptable. Operation and maintenance instructions shall contain the following as a minimum:

1. Approved shop drawings and submittal data

2. Model, type, size and serial numbers of equipment furnished

3. Equipment and driver nameplate data

4. List of parts showing replacement numbers

5. Recommended list of spare parts

6. Complete operating instructions including start-up, shutdown, adjustments, cleaning, etc.

7. Maintenance and repair requirements including frequency and detailed instructions

8. Name, address and phone numbers of local representative and authorized repair service

L. CONTRACTOR's Safety Program – CONTRACTOR shall adopt a written safety program complying with the requirements for employee and public safety as set forth in the City of Springfield Standard Specification 105.05. Four (4) copies of the CONTRACTOR's safety program shall be submitted to the Engineer. Adoption of and compliance with such program and submission of the copies thereof to the ENGINEER shall be a condition precedent to the CONTRACTOR's right to receive progress payments.

M. Spill Containment and Cleanup Plan

N. Sanitary Sewer By-Pass Pumping and Diversion Plan

O. Dewatering Plan

P. Lane County Materials Lab certification for HMAC for 2014.

Q. Quality Control Submittals

1. Manufacturer's Certificates of Compliance signed by the product manufacturer certifying that materials, manufacture, and product specified conforms to or exceeds specified requirements and intent for which product will be used.

2. Certificates of Compliance Testing and Inspection--Submit Certificates of Compliance Testing and Inspection when testing or inspection is required by Laws and Regulations or governing agency or specified in the individual Specification Sections.

END OF SECTION

SPECIAL PROVISIONS

SECTION E – Temporary Traffic Control

P21080 Franklin/McVay Sanitary Sewer Extension

E1. General

1.1 Summary

The CONTRACTOR shall maintain traffic control and protection in the work areas twenty-four (24) hours per day. Traffic control shall conform to the approved Traffic Control Plans (TCP) and standards set forth in the "Oregon Manual on Uniform Traffic Control Devices for Streets and Highways" issued by the Oregon Department of Transportation, including the current Oregon Supplements.

1.2 Related Specifications

A. Springfield Standard Construction Specifications

B. Latest version of the Oregon Department of Transportation (ODOT) Standard Specifications for Construction, Section 00220 – Accommodations for Public Traffic, Section 00225 – Work Zone Traffic Control, Section 02110 – Posts, Blocks, and Braces, Section 02190 – Preservative Treatment of Timber, and 02910 – Sign Materials.

C. Manual on Uniform Traffic Control Devices for Streets and Highways

1.3 Submittals

A. Traffic Control Plan Revisions: Any proposed revisions to the approved TCP shall be submitted no later than two (2) weeks before any work that impacts traffic begins. If the proposed revisions to the TCP(s) are not received and approved prior to starting, the ENGINEER reserves the right to shut down all work at the CONTRACTOR's expense (with a written stop work order to follow within 24 hours) until the established traffic control complies with the approved TCP or the approved revisions to the TCP.

B. Road Closure Schedule: Submit proposed closure schedules in accordance with ODOT Specification Section 00220.03(b).

1.4 Stages of Work

The following general descriptions of the stages of work are intended to provide a general overview of the limits of the various stages of construction corresponding to the stages shown on the Traffic Control Plans. The following descriptions are not intended to describe all of the work included in the various stages of construction.

- Stage 1 – South Franklin Boulevard/McVay Highway from the downstream connection of the existing trunk sewer at Station 1+00 to the intersection of South Franklin Boulevard/McVay Highway and East 19th Avenue.

- Stage 2 – South Franklin Boulevard/McVay Highway from the intersection of South Franklin Boulevard/McVay Highway and East 19th Avenue to the intersection of South Franklin Boulevard/McVay Highway and Nugget Way.

- Stage 3 – South Franklin Boulevard/McVay Highway from the intersection of South Franklin Boulevard/McVay Highway and Nugget Way to the upstream terminus of the new trunk sewer at Station 41+80. During construction of the portion of work located outside the roadway (Station 34+85 to Station 41+80), South Franklin Boulevard/McVay Highway shall be reopened to traffic.

- Stage 4 – East 19th Avenue from the intersection of South Franklin Boulevard/McVay Highway and East 19th Avenue to the intersection of East 19th Avenue and Nugget Way.

1.5 ODOT Reference Specifications

Follow the requirements of ODOT Standard Specifications for Construction, Section 00220 – Accommodations for Public Traffic, Section 00225 – Work Zone Traffic Control, Section 02110 – Posts, Blocks, and Braces, Section 02190 – Preservative Treatment of Timber, and 02910 – Sign Materials.

Where the term, "Agency" is used in the ODOT Standard Specifications for Construction, it shall be understood to mean the City of Springfield as OWNER.

1.6 Coordination with Other Projects

Lane County will be working on Glenwood Boulevard until the end of July 2014. No road closures for this project will be allowed until Lane County's work on Glenwood Boulevard is completed.

SECTION 00220 - ACCOMMODATIONS FOR PUBLIC TRAFFIC

Comply with Section 00220 of the Standard Specifications modified as follows:

00220.02 Public Safety and Mobility - Replace the bullet that begins, "When included in the…" with the following bullet:

- Use portable changeable message signs (PCMS) according to Section 00225.

Replace the bullet that begins, "For all sidewalk or..." with the following bullet and sub-bullets:

- For all sidewalk or sidewalk ramp closures, install signs and other TCD as shown on the plans or standard drawings. Mount signs between the panels of a Type II barricade and place barricades facing pedestrian traffic.
  - Close the sidewalk at a point where there is an alternate way to proceed, or provide signing and other TCD to indicate an alternate pedestrian route. Place closure signing at the closure point in the middle of the existing pedestrian facility facing pedestrian traffic.
  - Provide additional TCM and an alternate pedestrian route that, as nearly as is practical, matches existing facility features and meets the accessibility requirements in Part 6 of the MUTCD and the requirements of the Americans with Disabilities Act (ADA).
    - Pave the alternate pedestrian route surface or provide an approved, non-slip 60 inch minimum wide surface meeting the requirements of the ADA.

    - Where a 60 inch minimum width along the entire alternate pedestrian route is not possible, provide 60 by 60 inch passing spaces every 200 feet along the route.
  - Protect pedestrians and delineate the alternate pedestrian route by placing pedestrian channelizing devices (PCD), or other approved devices, between the alternate pedestrian route and the work area. Keep PCD in place, except as required for actual work, until the existing pedestrian facility is reopened.
  - Reopen the existing pedestrian facility during non-work hours or continue to provide an alternate pedestrian route.

Replace the bullet that begins, "Do not stop or hold vehicles..." with the following bullet:

- Do not stop or hold vehicles on a highway within the Project Site for more than 20 minutes.

Replace the bullet that begins, "Do not perform work…" with the following bullet:

- Do not perform work that restricts traffic access to and from both sides of the traveled way at the same time.

Add the following bullets to the end of the bullet list:

- When performing trench excavation or other excavation across or adjacent to a travel lane on a roadway having a pre-construction posted speed greater than 35 mph, backfill the excavation, install surfacing, and open the roadway to traffic by the end of each work shift, unless otherwise allowed to remain closed. Install a "BUMP" (W8-1-48) sign approximately 100 feet before the backfilled area and a "ROUGH ROAD" (W8-8-48) sign approximately 500 feet ahead of the "BUMP" sign. If this requirement is not met, maintain all necessary lane or shoulder closures and provide additional TCM, including flagging, at no additional cost to the OWNER. Do not use temporary steel plating to reopen the roadway.

- When pipe backfill cannot be achieved by the end of a work shift and temporary plating is not in place according to 00405.46(e), provide additional temporary traffic control measures, including flagging, required by the ENGINEER at the CONTRACTOR's expense.

- When an abrupt edge is created by excavation, protect traffic according to the "Excavation Abrupt Edge" and the "Typical Abrupt Edge Delineation" configurations shown on the standard drawings.

- Do not place work zone signs or sign supports that will block existing walkways or existing bikeways, except at the closure point of a walkway or bikeway.

- Delineate all business accesses with blue tubular markers on 10 foot maximum spacing. Mark the access with Type "B" "BUSINESS ACCESS" (CG20 11 24) signs. Locate and install these signs as directed.

00220.03(a) Over-Dimensional Vehicle Restrictions - Replace this subsection, except for the subsection number and title, with the following:

When a project restricts the width, length, height, or weight of vehicles through a work zone or detours trucks around a work zone, fill out and submit a completed copy of the "Highway Restriction Notice-Size and/or Weight" form (Form No. 734-2357), available from the ODOT Motor Carrier Transportation web site, at least 35 calendar days before the restriction or detour takes effect.

00220.40(e) Lane Restrictions - Replace the paragraph that begins "Do not close any…" with the following paragraph:

Do not close any traffic lanes and remove all barricades and objects from the roadways indicated below during the following periods:

Replace subsections (1), (2), (3) and (4) with the following:

(1) Left Turn Lane from West Bound Franklin Boulevard Turning onto South Franklin Boulevard/McVay Highway:

- After construction of the trunk sewer has reached Station 4+54

(2) South Franklin Boulevard/McVay Highway:

- Between September 30, 2014 and June 14, 2015
- When installing the new trunk sewer outside the roadway, from approximate Station 34+90 to Station 41+80
- South Franklin Boulevard/McVay Highway and East 19th Avenue shall not be closed at the same time.

(3) East 19th Avenue:

- Between August 1, 2014 and June 14, 2015
- South Franklin Boulevard/McVay Highway and East 19th Avenue shall not be closed at the same time.

00220.60(a-1) CONTRACTOR Responsibility - Replace the bullet that begins, "Keep roads, streets, bikeways…" with the following bullet:

- Keep surfaces being used by public traffic free of all dirt, mud, gravel, materials, or other debris.

Replace the bullet that begins "Maintain all detour…" with the following bullet:

- Maintain all detour and stage construction surfacing as specified or directed.

SECTION 00225 - WORK ZONE TRAFFIC CONTROL

Comply with Section 00225 of the Standard Specifications modified as follows:

00225.01(a) Abbreviations - Add the following abbreviations to the list:

PCD - Pedestrian Channelizing Devices

TMA - Truck Mounted Impact Attenuator

00225.01(b) Definitions - Replace the "Work Zone" definition with the following definition:

An area within highway construction, maintenance, or utility work activities which extends from the first road work, bridge work, or utility work warning sign to the last sign or the last TCD.

Add the following definitions:

Protection Vehicle - A vehicle placed in advance of short-duration or mobile work activities and dedicated to the protection of workers and equipment in the activity area. A protection vehicle is equipped with appropriate warning lights and signs. A protection vehicle may be fitted with a TMA.

Work Area - The portion of the highway closed to public traffic and set aside for workers, construction equipment, construction materials, and a protection vehicle, if applicable. The work area is typically delineated by channelizing devices or separated from traffic using temporary barriers.

00225.01(c) Standards - Replace the bullet that begins "FHWA "Standard Highway…" with the following bullet:

- FHWA "Standard Highway Signs" manual

Add the following bullet to the end of the bullet list:

- ODOT "Oregon Portable Changeable Message Sign Handbook", available on the ODOT Traffic Control Plans Unit website.

00225.02 General Requirements - Replace this subsection, except for the subsection number and title, with the following:

Provide and maintain all TCM. The ENGINEER may verbally or in writing require immediate changes to the TCM being used on the Project. Immediately make these changes, as directed. Submit all proposed TCM revisions to the ENGINEER for approval.

Do not start work on any stage of construction until the TCP has been reviewed and accepted and all TCM are in place and the TCP is operating satisfactorily. During construction, determine if TCM, in addition to those in place, are required and immediately notify the ENGINEER. Immediately make changes as approved or directed, but do not place or remove devices without prior approval.

Work may be suspended as specified in 00180.70 or the TCM may be performed by the OWNER if the CONTRACTOR fails to correct an unsafe condition. Costs for work performed by the OWNER will be deducted from monies due the CONTRACTOR.

Install a 48 inch "TRUCKS" sign with an 18 inch "500 FEET" rider, approximately 500 feet before each point of access of all noncommercial stockpile sites, work zone staging area, material sources, waste areas, and plant set-up areas to a public roadway.

Refer to Special Provisions Section B - General Conditions, for project information sign requirements.

Install two sign flag boards, as shown on the standard drawings, above the following detour and road closed advance warning signs, where applicable:

- "DETOUR AHEAD", "DETOUR XXXX FT", "DETOUR X/X MILE" (W20-2) signs.
- "ROAD CLOSED AHEAD", "ROAD CLOSED XXXX FT", "ROAD CLOSED X/X MILE" (W20-3) signs.

00225.05 CONTRACTOR Traffic Control Plan - Replace this subsection, except for the subsection number and title, with the following:

The CONTRACTOR will be allowed to use the OWNER's TCP, modify the OWNER's TCP, or use a different TCP. Submit the following, for approval, 5 calendar days before the preconstruction conference:

(a) Agency or CONTRACTOR TCP - If the OWNER's TCP is used without modification, a written notification indicating that the OWNER's TCP will be used without modification.

If the CONTRACTOR will be using a modified OWNER TCP, or if the CONTRACTOR will not be using the OWNER's TCP, provide stamped working drawings according to 00150.35 which include the following:

- Proposed TCP showing all TCM and quantities of all TCD.
- Proposed order and duration of the TCM.
- A detailed temporary striping plan.

If additional modifications are made to the CONTRACTOR modified OWNER TCP or the CONTRACTOR's TCP, submit stamped working drawings, according to 00225.05(a), at least 14 calendar days before beginning the construction activities that require the TCP changes.

00225.10 General - Replace this subsection, except for the subsection number and title, with the following:

Evaluate the condition of TCD using the criteria shown in the most current version of the American Traffic Safety Services Association (ATSSA) publication titled "Quality Guidelines for Temporary Traffic Control Devices and Features". Use new TCD or TCD meeting the "Acceptable" quality category of the ATSSA publication for all installations unless otherwise specified. Provide test results, quality compliance certificates, equipment lists, and drawings when specified. Acceptance will be by the QPL, test results, quality compliance certificates, equipment lists, drawings, and testing as necessary to assure compliance with the Specifications. After TCD have been installed and accepted on the Project, inspect and maintain the condition of the devices.

All work zone TCD shall comply with the crashworthy requirements of the National Cooperative Highway Research Program (NCHRP) Report 350 or with the American Association of State Highway and Transportation Officials (AASHTO) Manual for Assessing Safety Hardware (MASH).

00225.11(b-5) Square Tube Sign Supports - Replace this subsection with the following subsection:

00225.11(b-5) Perforated Steel Square Tube Sign Supports - Use perforated steel square tube sign supports from the QPL and as shown on the standard drawings.

00225.11(c-1) Temporary Signs - Replace this subsection, except for the subsection number and title, with the following:

Use sign covers for temporary signs that meet the following requirements:

- From the QPL or made from one of the following materials:
  - One-piece plywood.
  - Type 2 riprap geotextile fabric.
- Large enough to completely cover the sign and attached rider signs.
- Easy to attach to and remove from the sign without damaging the sign face.
- Black and non-reflective.
- Opaque to prevent message visibility under day and nighttime conditions.

00225.11(d) Sign Flags - Replace the bullet that begins "16 inch square…" with the following bullet:

- Square and 16 inches by 16 inches or larger.

00225.11(g) Flashing Stop/Slow Paddles - Replace this subsection with the following subsection:

00225.11(g) Flagger Stop/Slow Paddles - Use flagger "STOP/SLOW" paddles from the QPL.

00225.12 Temporary Barricades, Guardrail, Barrier, Attenuators, and Pedestrian Fencing - Replace this subsection title and the sentence that begins "Furnish temporary barricades…." with the following:

00225.12 Temporary Barricades, Guardrail, Barrier, Attenuators, and Channelizing Devices - Furnish temporary barricades, guardrail, barrier, attenuators, delineation fencing, PCD, and accessories meeting the following requirements:

00225.12(f) Pedestrian Fencing - Replace this subsection with the following subsection:

00225.12(f) Work Zone Fencing - Use work zone fencing from the QPL, or as approved.

Add the following subsection:

00225.12(h) Pedestrian Channelizing Device - Use PCD from the QPL and as shown on the standard drawings or in the TCP.

00225.13(a) Tubular Markers - Add the following to this subsection:

Use blue plastic markers for temporary business accesses only. Use orange plastic markers for all other applications of work zone traffic control.

Blue plastic tubular markers shall be reflectorized with at least two blue, flexible reflective bands at least 3 inches wide, securely attached no more than 2 inches from the top with no more than 6 inches nor less than 1 inch between the bands.

00225.13(d) Plastic Drums - Replace the sentence that begins "Provide drums with…" with the following sentence:

Use retroreflective drum sheeting meeting the requirements of ASTM D 4956 Type III or Type IV.

00225.16(b) Portable Changeable Message Signs - Replace this subsection, except for the subsection number and title, with the following:

Use PCMS from the QPL.

Add the following subsection:

00225.25 Safety Apparel - Workers, except flaggers, working within highway right-of-way and exposed to traffic or construction equipment shall wear high-visibility safety apparel that meets the Performance Class requirements of the most current version of ANSI/ISEA 107, "American National Standard for High Visibility Safety Apparel and Headwear Devices". Wear safety apparel that at least meets the following minimum requirements:

- **Daytime:** Class 2 upper body garment
- **Nighttime:** One of the following:
  - Class 3 upper body garment

    - Class 2 upper body garment and Class E trousers or gaiters
- ANSI Class 2 or 3 fluorescent orange-red, fluorescent yellow-green or a combination of the two of these colors for the apparel background material color
- Fluorescent yellow-green, orange, yellow, or bright white hardhat or baseball-style cap. Wear hardhats when there is danger of falling or flying objects or electrical shock or burns

Wearing high-visibility safety apparel that exceeds the minimum class requirements is allowed.

00225.27(a) Flagger Equipment - Replace this subsection, except for the subsection number and title, with the following:

Equip flaggers as follows:

- For daytime and nighttime flagging operations, wear high-visibility safety apparel that meets the Performance Class requirements of the most current version of ANSI/ISEA 107, "American National Standard for High Visibility Safety Apparel and Headwear Devices". Wear safety apparel that at least meets one of the following minimum requirements:
    - Class 3 upper body garment
    - Class 2 upper body garment and Class E trouser or gaiters
- Safety apparel with background material colors according to 00225.25.
- A hardhat or baseball-style cap according to 00225.25.
- A minimum 18 inch x 18 inch "STOP/SLOW" paddle made of rigid substrate and fabricated using type "R1"/"O4" sheeting, or a flagger STOP/SLOW paddle from the QPL. A 24 inch x 24 inch STOP/SLOW paddle is recommended for higher speed situations or where more visibility is desired.
- Portable, self-contained two-way radio and repeaters, as required, with a range suitable for communications throughout the Project Site.

00225.27(b) Flagger Station Lighting - Replace the bullet that begins "Provide flagger illumination…" with the following bullet:

- Provide sufficient flagger illumination to completely illuminate the flagger during flagging operations.

00225.28 Traffic Control Supervisor - Replace this subsection, except for the subsection number and title, with the following:

Equip Traffic Control Supervisor (TCS) as follows:

- Safety apparel according to 00225.25.
- Portable, self-contained two-way radio with a range suitable for the Project Site, when necessary.
- Cellular telephone active at all times.
- A vehicle that is equipped with a roof or post mounted rotating amber light or strobe light that is visible for 360 degrees.

00225.30 General - Replace the sentence that begins, Provide flaggers, TCS…" with the following sentence:

Provide flaggers, TCS, and pilot car operators, to stop, direct, and maintain traffic control through the work zone.

00225.31 Qualifications - Replace the paragraph that begins "Use flaggers, TCS…" with the following sentence:

Use flaggers, TCS, and pilot car operators that meet the following requirements:

00225.32 Traffic Control Supervisor - Replace this subsection, except for the subsection number and title, with the following:

When the bid schedule does not include an item for a TCS, appoint a trained person on the Project Site during working hours and on call at all other times who:

- Meets the requirements of 00225.31.
- Inspects and maintains TCD location, operation, quality, cleanliness, and effectiveness.
- Is equipped with a cellular telephone.
- Is equipped with a two-way radio, when necessary.
- Has the authority to assign and control flagging operations.
- Has filed their name and phone number with the ENGINEER and local police.
- Notifies the ENGINEER of any corrective measures made to the TCP if the TCP is not functioning as required, or to accommodate site conditions. Maintain the original intent of the TCP and do not implement changes to the TCP before revisions are approved by the ENGINEER.

00225.41(a) Speed Signs - Replace this subsection, except for the subsection number and title, with the following:

Use speed signs as follows:

(1) Advisory Speed Signs - Install Type "O4" advisory speed warning signs or riders as shown or as directed.

(2) Regulatory Speed Zone Signs - Install and maintain regulatory speed zone signs as directed and according to the "Temporary Speed Zone Order" signed by the State Traffic Engineer.

When regulatory Type "W1" speed zone signs are used, cover conflicting existing Type "W1" speed zone signs with sign covers according to Section 00941. Cover or remove temporary regulatory Type "W1" speed zone signs and restore the original speed zone signs according to the "Temporary Speed Zone Order" and when directed.

If an existing regulatory Type "W1" speed zone sign displaying the original speed is 1,000 feet or less beyond the limits of the temporary speed zone, additional temporary regulatory Type "W1" speed zone signs displaying the original speed are not required.

00225.41(b) Sign Supports - Replace this subsection, except for the subsection number and title, with the following:

(1) Wood Sign Posts - Except as provided in the following (2) through (5), mount all temporary signs on wood sign posts as shown and as shown on the standard drawings.

When sign posts are installed in rock, a shorter post may be used if the post is installed in a buried concrete footing at least 12 inches in diameter and 2 feet deep.

(2) Portable Sign Supports - Use portable sign supports as follows:

- When signs are needed at a single location for no more than 48 consecutive hours.
- Position the support so the lowest point of the sign is at least 1 foot above the roadway surface.
- Turn, cover, or remove signs at the end of each work shift when the condition is no longer in effect.
- Use with roll-up signs.
- Use ballast to prevent tipping of the signs in high wind.

(3) Concrete Barrier Sign Supports - Mount signs on concrete barrier so the:

- Lowest point of the sign is at least 7 feet above the roadway surface.
- Sign and post are held securely to concrete barrier by an approved device.
- Sign can be turned and locked in a position parallel to the flow of traffic when not in use.

(4) Temporary Sign Supports - Use TSS as follows:

- When signs are needed at a single location for more than 48 consecutive hours.
- When not practical to post mount due to location or when utility conflicts exists.
- Do not tip over TSS at any time.
- Position double post TSS behind 8 foot type III barricade, as shown on the standard drawing or in the TCP. Where horizontal width prevents an 8 foot barricade, provide a 4 foot type III barricade, as shown or as directed.
- When not in use, locate TSS as far from public traffic as practical and turn away from traffic, or cover the sign. Retain the type III barricade for delineation.

(5) Perforated Steel Square Tube Sign Supports - Perforated steel square tube sign supports may be used as a substitute for wood sign posts. Install perforated steel square tube sign supports as shown on the standard drawings.

00225.41(c) Sign Flag Boards and Sign Flags - Replace this subsection, except for the subsection number and title, with the following:

Use two sign flag boards and flags as follows:

(1) Sign Flag Boards - Install two sign flag boards, as shown or specified.

(2) Sign Flags - Sign flags may be installed above signs mounted on portable sign supports. Mount flags so the entire sign is visible.

00225.41(f) Inconsistent Temporary Signs - Replace this subsection, except for the subsection number and title, with the following:

Ensure that all temporary signs are properly used and consistent with the work zone. When signage is no longer required for staging or shift work, remove all temporary signs, sign flag boards, supports, sign covers, and ballast.

When temporary sign messages conflict with work zone conditions, traffic patterns, or other staging configurations, but signs are needed later in Project, do the following:

- Turn or cover the signs so the message is not visible to any traffic.
- Remove or cover sign flag boards.
- When covering signs and sign flag boards, use covers meeting the requirements of 00225.11(c-1).

When it is determined that only minor work remains on the Project and the work area does not encroach on traffic lanes or shoulders, do the following:

- Remove all temporary signs, including the advance construction and Project identification signs.
- Remove all sign flag boards and ballasts.
- Use roll-up signs on portable sign supports for minor or short duration work.

00225.41(g) Permanent Signing - Replace this subsection, except for the subsection number and title, with the following:

When permanent sign messages conflict with adjacent temporary signing, work zone conditions, traffic patterns or other staging configurations, do the following:

- Turn or cover the signs so the message is not visible to any traffic.
- When covering signs, use sign covers meeting the requirements of 00225.11(c-1).

When work zone conditions change and permanent sign messages no longer conflict with temporary signing, uncover permanent signs. Install or uncover appropriate permanent signing as required, before changing traffic control staging.

00225.42(d) Impact Attenuators - Replace the two bullets that begin, "Use attenuators designed…" and "For narrow site…" with the following two bullets:

- Use attenuators designed for the pre-construction posted speed.
- For narrow site systems, secure the first two barrier sections by pinning or restraining as shown on the standard drawings.

00225.42(f) Temporary Pedestrian Fencing - Replace this subsection with the following subsection:

00225.42(f) Work Zone Fencing - Install work zone fencing as shown or as directed.

Add the following subsection:

00225.42(h) Pedestrian Channelizing Device - Install PCD as shown on the standard drawings or in the TCP. Provide a continuous route by interconnecting all adjacent PCD. Provide a clean unobstructed path for pedestrians according to 00220.02 and ADA requirements.

00225.43(e) Pavement Markers - Replace the paragraph that begins "Unless shown on the…" and the three bullets with the following paragraph and bullets:

Unless otherwise shown, install pavement markers as follows:

- Three single markers spaced 5 feet apart to simulate a 10 foot skip line with a gap of 30 feet to the next skip line.
- Single markers spaced 10 feet apart for solid no passing lines.
- Double markers spaced 10 feet apart for double solid no passing lines.

Replace the paragraph that begins "Flexible pavement markers…" with the following two paragraphs:

Temporary pavement markers shall remain in place until the permanent markings are complete. Replace missing markers at no additional cost to the OWNER. On the final pavement wearing course, place permanent markings a maximum of 28 calendar days after placing temporary pavement markers, or as directed.

Remove temporary markers from the pavement wearing course within 5 calendar days after the placement of permanent markings. Remove temporary pavement markers without damaging the roadway surface. Flexible pavement markers may be cut off within 1/8 inch of the roadway surface.

00225.43(e-3) Flexible Overlay Pavement Markers - Replace the bullet that begins "When temporary striping…: with the following bullet:

- When temporary striping is determined as not practical by the ENGINEER.

Replace the paragraph that begins "Install the markers…" with the following paragraph:

Install the pavement markers before reopening the roadway to traffic. Remove the markers on pavement base courses before placing the next surface layer.

00225.43(e-4) Existing Pavement Marker Removal - Replace the sentence that begins "Remove the markers from…" with the following sentence:

Remove pavement markers from permanent pavement wearing courses without damaging the roadway surface and ensure the surface texture remains similar to that of the surrounding area.

00225.43(g) Temporary Striping - Replace this subsection with the following subsection:

(g) Temporary Pavement Markings - Before opening roadways to traffic, unless otherwise specified in 00225.43(h), apply temporary pavement markings on pavement base courses, wearing courses, and new bridge deck surfaces at locations shown, or as directed. Immediately remove all unacceptable pavement markings and replace with acceptable markings at no additional cost to the OWNER.

Temporary pavement markings may be placed using paint, temporary tape, or pavement markers as follows:

(1) Base Courses - On pavement base courses, use paint, temporary tape, or pavement markers for temporary pavement markings, as shown in the standard drawings or in the TCP.

For painted striping, apply 4 inch wide by 10 foot long stripes with 30 foot gaps for skip line striping. Apply 4 inch wide, continuous stripes for solid line striping. Apply bead binder at a thickness of 15 mils wet, equivalent to 17 gallons/mile for a 4 inch wide solid line. Apply glass beads at a rate of 5 pounds per gallon of paint.

Before opening a traffic lane on a base course adjacent to temporary concrete barrier that is located on the right-hand side of the traffic lane, place right-hand edge line markings using paint or a continuous removable tape, or as directed.

Before opening a traffic lane adjacent to temporary concrete barrier that is located on the left-hand side of the traffic lane, place left-hand edge line markings using paint, a continuous strip of temporary removable tape, with pavement markers spaced 10 feet apart, or as directed.

(2) Wearing Course - On the pavement wearing course, use paint, temporary removable tape, or pavement markers for skip line or solid line markings, as follows:

- For left-hand solid lines and slip lines striping, use temporary removable tape or pavement markers.
- For right-hand solid edge line markings, use paint or a continuous strip of temporary removable tape.
- Where inlaid permanent pavement markings are to be placed, use paint for temporary pavement markings.
- Where durable permanent pavement markings are to be placed, apply temporary line markings using painted striping until durable permanent pavement markings can be applied according to 00225.43(g-4).

Before opening a traffic lane on a wearing course adjacent to temporary concrete barrier that is located on the right-hand side of the traffic lane, place right-hand solid edge line markings using a continuous strip of temporary removable tape, or as directed.

Before opening a traffic lane on a wearing course adjacent to temporary concrete barrier that is located on the left-hand side of the traffic lane, place left-hand solid edge line markings using a continuous strip of temporary removable tape, with pavement markers spaced 10 feet apart, or as directed.

(3) New Bridge Deck Surfaces - On new bridge deck surfaces use temporary removable tape for temporary pavement markings for skip line or solid line striping, as shown or as directed.

(4) Durable Permanent Pavement Markings - On pavement wearing courses where durable permanent pavement markings are to be placed, apply temporary painted striping until durable permanent pavement markings can be applied, unless otherwise directed. Reduce the application rate of the paint to a thickness of 10 mils wet, equivalent to 12 gallons per mile for a 4 inch wide solid stripe. Apply reflective elements at a rate of 5 pounds per gallon of paint. Only one application is required.

Place temporary painted striping directly adjacent to the final location of the durable permanent pavement markings. Place the temporary painted striping so the durable permanent pavement markings can be aligned with existing striping at the end of the project limits. Removal of the temporary painted striping is not required, if aligned as described in this subsection.

When scheduled installation of durable permanent pavement markings will exceed, or will likely exceed, 28 calendar days after placement of the wearing surface, furnish and place temporary painted striping at the standard rate stated in 00225.43(g-1). Removal of this striping is not required, if aligned as described in this subsection.

00225.43(h) Pavement Edge Delineation - Replace this subsection, except for the subsection number and title, with the following:

Place tubular or conical markers to delineate the edge of pavement immediately after construction work removes or obscures painted edge stripes (shoulder or fog lines). If the left shoulder is less than 8 feet wide, tubular or conical markers may be substituted by installing Type 5 delineators on the concrete barrier at 25 foot spacing before left-hand edge line markings are removed or obscured.

Place tubular or conical markers to delineate the edge of pavement immediately after construction work or paving operations create an abrupt or sloped edge drop-off 1 inch or more in height along the right-hand or left-hand shoulder.

Maintain pavement edge delineation until temporary pavement markings can be applied according to 00225.43(g). Temporary pavement markings must be applied within 14 calendar days after the painted edge stripe has been removed or obscured. Locate and maintain the tubular and conical markers as follows:

- Between traffic and the abrupt edge.
- Space markers as shown for traffic delineators on the standard drawings at a maximum spacing of 200 feet.
- Patrol daily and restore them to their proper position at least once at the start of each work shift and once at the end of each work shift until the tubular or conical markers are no longer required.
- Remove after a new edge stripe has been painted and new delineators are in place.

00225.43(i) Stripe and Legend Removal - Add the following paragraph to the end of this subsection:

Remove legends so that the legend outline is not recognizable on the pavement surface.

Add the following subsection:

00225.43(j) Pavement Legends and Bars - Before opening roadways to traffic, unless otherwise allowed, apply temporary pavement legends and bars on pavement base courses at locations designated. Apply bead binder at a thickness of 15 mils wet and glass beads at a rate of 5 pounds per gallon of paint.

00225.46(b) Portable Changeable Message Signs (PCMS) - Replace this subsection, except for the subsection number and title, with the following:

Use PCMS according to the "Oregon Portable Changeable Message Sign Handbook" and as follows:

- Program concise accurate messages according to the "Oregon Portable Changeable Message Sign Handbook".
- Install beyond the outside shoulder, behind existing barrier or guardrail, as shown in the TCP, or as directed when conditions do not allow the PCMS to be located beyond the traffic lane.
- Install the PCMS device where it can be seen from 1/2 mile minimum. The PCMS message should be legible from 800 feet in the daytime and 600 feet at night.
- Mount so that the bottom of the sign is 7 feet above the ground.
- Program so that the entire message is displayed within 8 seconds.
- Use a maximum of two panels to display an entire message.
- Separate two PCMS used in sequence by 1,000 feet minimum.
- Messages shall not scroll horizontally or vertically across the face of the sign.
- When the PCMS is not being used to display any messages for more than 5 consecutive calendar days, remove the PCMS from the roadway and locate the device at least 30 feet from the edge of the nearest traffic lane, place behind a barrier system, or as directed..
- Provide a solar/battery power source.
- Obtain approval from the ENGINEER before displaying or altering messages.

00225.47(a) Flaggers - Replace the paragraph that begins "During advance flagging…" with the following paragraph:

During advance flagging operations, the advance flagger shall only display the "SLOW" face of the paddle by covering the "STOP" face of the paddle with a sign cover in accordance with 00225.11(c-1).

00225.47(b) Flagger Station Lighting - In the bullet that begins "Locate the light equipment…", replace the words "travel lane" with the words "traffic lane".

Replace the bullet that begins "Place the flagger…" with the following bullet:

- Position and orient the flagger station lighting to direct the maximum amount of light toward the flagger and away from the approaching traffic in the near lane.

00225.49 Pilot Cars - Replace this subsection, except for the subsection number and title, with the following:

Safely operate pilot cars at a prudent speed, and at a speed that does not exceed that posted on the temporary advisory speed signing.

00225.60 Temporary TCD - Replace this subsection, except for the subsection number and title, with the following:

Evaluate the condition of TCD and maintain them using the criteria shown in the most current version of the ATSSA publication titled "Quality Guidelines for Temporary Traffic Control Devices and Features". Except for electrical devices, replace all TCD that, according to the ATSSA publication, are in "Marginal" or "Unacceptable" condition with equal devices that are in new or "Acceptable" condition, within a time period agreed upon by the ENGINEER.

Electrical devices that are in "Marginal" or "Unacceptable" condition may be repaired instead of being replaced, as long as the repairs are satisfactorily completed within a time period agreed upon by the ENGINEER.

The replacement or repair of TCD, found to be in "Marginal" or "Unacceptable" condition, shall be made at no additional cost to the OWNER except as in 00225.90(a-1).

Evaluate, maintain, repair or replace TCD, and perform other duties including the following:

- Keep the devices in proper position, clean, and legible at all times.
- Keep lights, reflectors, and flashers clean, visible, and operable during both daylight and darkness.
- Trim or remove vegetative growth or other materials so the devices can be seen.
- Verify, by inspection, the effectiveness of the installations at frequent intervals, both in daylight and darkness, at actual travel speeds.
- Repair, replace, or restore damaged or destroyed devices to maintain continuity and effectiveness.
- Maintain temporary TCD during suspensions of work the same as if work were in progress.

When the bid schedule does not include an item for a TCS, the CONTRACTOR's Superintendent or designee shall prepare and sign a daily "Traffic Control Inspection Report" (Form No. 734-2474) each working day. Submit the report to the ENGINEER no later than the end of the next working day.

Add the following subsection:

00225.63 Temporary Traffic Delineation - At no additional cost to the OWNER, evaluate and maintain or immediately replace all unacceptable temporary traffic delineation with acceptable materials as follows:

(a) Pavement Markers - Damaged or missing markers. Maintain proper alignment and spacing of markers.

(b) Temporary Tape - Damaged or missing temporary tape. Maintain proper alignment and placement of temporary tape.

When removing damaged delineation from the pavement surface, remove adhesives, hardware, damaged delineation fragments or other materials using a method that will not damage the pavement surface. Repair any damaged surfaces to the ENGINEER's satisfaction at no additional cost to the OWNER.

00225.66 Portable Electrical Signs - Replace the paragraph that begins "Maintain and use…" with the following paragraph:

Maintain and use the required PCMS and sequential arrow signs according to the manufacturer's recommendations, TCP, and as directed.

00225.67 Flagger Station Lighting - Replace the bullet that begins "Sufficient fuel to…" with the following bullet:

- Sufficient fuel to maintain continuous operation of the generator.

SECTION 02110 - POSTS, BLOCKS, AND BRACES

Comply with Section 02110 of the Standard Specifications modified as follows:

02110.40 Wood Sign Posts - Replace the sentence that begins "Fabricate wood sign posts…" with the following sentence:

Fabricate wood sign posts from Douglas fir, surfaced four sides (S4S) and free of heart center (FOHC).

02110.40(a) Grading - Replace the Douglas Fir and Hem-Fir grading requirements with the following grading requirements:

Species	4" x 4"	4" x 6"	6" x 6" and Larger
Douglas Fir	No. 1 124-b WCLIB 42.11 WWPA	No. 1 123-b WCLIB 62.11 WWPA	No. 1 131-b WCLIB 80.11 WWPA

SECTION 02190 - PRESERVATIVE TREATMENT OF TIMBER

Comply with Section 02190 of the Standard Specifications modified as follows:

02190.00 Scope - Replace this subsection, except for the subsection number and title, with the following:

This Section includes the requirements for preservative treatment of lumber, timber, round timber piling, guardrail posts and blocks, sign posts, fence posts, and other items as specified.

02190.10 General - Replace this subsection, except for the subsection number and title, with the following:

All preservative treatment shall be according to AASHTO M 133 and its referenced AWPA Standards, except use the following according to the AWPA Standard:

- Use Category UC4C, Commodity Specification Section E for round timber piling in fresh water and on land.
- Use Category UC5A, Commodity Specification Section G for round timber piling exposed to salt or brackish water.
- Use Category UC4B, Commodity Specification Section A for fence and sign posts.
- Use Category UC4B, Commodity Specification Section A for guardrail posts and blocks.

SECTION 02910 - SIGN MATERIALS

Comply with Section 02910 of the Standard Specifications modified as follows:

02910.02 Types of Signs - Add "O6", "O8", "W12", and "YW" sign types and replace the "B2", "B3", "C1", "C2", "F1", "G1", "G2", "G3", "G4", "O3", "O4", "O5", "R1","W9", "W11", and "Y7" sign types with the following:

"B2" Blue Type III or Type IV sheeting background with white Type IX permanent removable legend.

"B3" Blue Type IX sheeting background with white Type IX permanent or removable legend or white Type IX sheeting overlaid with blue transparent paste background, with retroreflective silver-white screened legend.

"C1" Brown Type III or Type IV sheeting background with white Type IX permanent or removable legend.

"C2" Brown Type IX sheeting background with white Type IX permanent or removable legend or white Type IX sheeting overlaid with brown transparent paste background, with retroreflective silver-white screened legend.

"F1" White Type IX sheeting background overlaid with red and blue transparent paste background with white Type IX permanent legend.

"G1" Green Type III or Type IV sheeting background with white Type IX removable legend.

"G2" Green Type III or Type IV sheeting background with white Type IX permanent legend.

"G3" Green Type IX sheeting background with white Type IX permanent legend, or white Type IX sheeting background overlaid with green transparent paste background with retroreflective silver-white screened legend.

"G4" Green Type IX sheeting background with white Type IX removable legend.

"O3" Fluorescent orange Type VIII, or Type IX sheeting background with black nonreflective permanent legend and red retroreflective symbol (Stop or Yield Ahead Symbol Sign).

"O4" Fluorescent orange Type VIII or Type IX sheeting background with black nonreflective permanent legend.

"O5" Fluorescent orange Type VIII or Type IX sheeting background with black nonreflective removable legend.

"O6" Fluorescent orange Type VIII or Type IX sheeting background with black nonreflective permanent legend and red, yellow, and green Type VIII and Type IX circles. (Signal Ahead Symbol Sign)

"O8" Fluorescent orange Type VIII or Type IX sheeting background with black nonreflective screened or cut-out permanent legend and silver-white Type VIII or Type IX symbol. (Speed Reduction Symbol Sign)

"R1" White Type IX sheeting background overlaid with red transparent paste background with white Type IX permanent legend.

"W9" Silver-white Type III or Type IV sheeting background with blue nonreflective screened or cut-out permanent legend.

"W11" Silver-white Type III or Type IV sheeting background with black nonreflective screened or cut-out permanent legend with red Type III or Type IV symbol.

"W12" Silver-white Type III or Type IV sheeting background with transparent green screened legend or green Type III or Type IV cut-out permanent legend with blue Type III or Type IV symbol.

"Y7" Fluorescent yellow Type IX sheeting background with black nonreflective screened or cut-out permanent legend and red Type IX symbol. (Stop or Yield Ahead Symbol Sign)

"YW" Yellow Type III or Type IV sheeting background with black nonreflective screened or cut-out permanent legend, and white Type III or Type IV sheeting background with black nonreflective screened or cut-out permanent legend and red Type III or Type IV symbol.

02910.10 Aluminum - In the paragraph that begins "Fabricate sheet...", replace the sentence that begins "Fabricate sheet aluminum..." with the following two sentences:

Fabricate sheet aluminum signs from aluminum alloy 6061-T6, 5052-H38, 5154-H38, or approved equal. Give a chromate treatment conforming to ASTM B 449, Class 2 or a titanium-based coating according to ASTM B 921.

02910.20(a) General - Replace the sentence that begins "Use reflective sheeting…" with the following sentence:

Use reflective sheeting Type I and retroreflective sheeting Type III, Type IV, Type VIII, and Type IX from the QPL and the following:

02910.32(b) Retroreflective Sheeting Legend - In the paragraph that begins "The silver-white or…", replace the sentence that begins "The white retroreflective sheeting…" with the following sentence:

The white retroreflective sheeting shall consist of Type IX sheeting conforming to 02910.20.

02910.75 Manufacturer's Warranty - Replace the paragraph that begins "For retroreflective Type III…" with the following paragraph:

For retroreflective Type III and Type IV sheeting used for permanent signs, provide a Warranty, for a Warranty period of 10 years, for restoring sign panels and replacing sheeting if the sheeting has failed as defined below.

In the paragraph that begins "For purposed of the Warranty…", replace the bullet that begins "70% of minimum coefficient…", with the following bullet:

- 70% of minimum coefficient of retroreflection for designated sheeting or cuttable film according to ASTM D 4956 for the remaining 3 years of the Warranty period for Type III and Type IV sheeting and remaining 5 years of the Warranty period for Type IX sheeting.

END OF SECTION

SPECIAL PROVISIONS

SECTION F – Construction Survey Work

P21080 Franklin/McVay Sanitary Sewer Extension

F1. General

1.1 Description

This work consists of all surveying activities necessary to control the many phases of work required to construct the project to the lines and grades as shown, specified, established or required. The ENGINEER will provide construction staking for the project to the level of detail the ENGINEER views as sufficient for layout of the work. If the CONTRACTOR needs additional supplementary construction staking then such additional staking will be provided by the CONTRACTOR. The CONTRACTOR's surveyor shall complete all supplementary surveying and make all supporting computations and field notes required for control of the work and as necessary to establish the exact position, orientation, and elevation of the work from the staking provided by the OWNER, including furnishing and setting additional construction stakes and marks, reference marks, and additional control stations.

The CONTRACTOR is to provide the ENGINEER a minimum of two weeks notice when construction staking will be needed.

The CONTRACTOR shall take necessary measures to insure the preservation of survey monuments, stakes, lot stakes and bench marks. The CONTRACTOR shall not disturb permanent survey monuments, stakes, lot stakes or bench marks without the consent of the ENGINEER, and shall notify the ENGINEER and bear the expense of replacing any that may be disturbed. When a change is made in the finished elevation of the pavement of any roadway in which a permanent survey monument is located, the monument cover shall be adjusted to the new grade without disturbing the underlying monument.

1.2 Surveyor

The individual designated by the CONTRACTOR to perform the work shall be licensed in the State as a Professional Land Surveyor and placed in "responsible charge" of the survey work.

1.3 Mandatory Pre-Survey Conference

The prime CONTRACTOR, relevant subcontractors, the surveyor and survey crew leader shall meet with the ENGINEER at least two weeks prior to beginning survey work. The purpose of this meeting will be to review and discuss the proposed methods and practices for accomplishing the required survey work.

1.4 ENGINEER's Survey Responsibilities

The ENGINEER will perform the following:

A. Provide basic construction staking. This work will include setting one offset stake for tangent manholes and two offset stakes for manholes at angle points. The offset stakes will include the offset distance to the center of the manhole and the cut height to the

pipe inverts at the manholes. The ENGINEER's surveyor will also set offset stakes at approximately 100 foot intervals along the pipe alignment. CONTRACTOR to coordinate timing of construction staking with ENGINEER. ENGINEER'S surveyor will make up to three site visits for the purpose of providing basic construction staking. The CONTRACTOR shall be responsible for protecting and/or re-setting horizontal and vertical alignment data following the initial staking. ENGINEER will not reestablish offset stakes previously placed. The CONTRACTOR shall provide traffic control during the ENGINEER's staking of initial horizontal and vertical alignment data.

B. Provide copies of plans and specifications.

C. Establish initial horizontal and vertical survey control stations in the proximity of the work.

D. Perform measurements and calculations for pay quantities.

E. After completion of construction, ENGINEER will perform final "as constructed" survey to verify the CONTRACTOR's as-built drawing mark-ups.

1.5 CONTRACTOR's Responsibilities

The CONTRACTOR will be responsible for performing the following:

A. Staking of Easements – The CONTRACTOR's surveyor shall locate and stake all lines of the permanent easements and all lines of the associated temporary construction easements within which any construction is being conducted.

B. Staking of New Sewers Constructed by Open-Cut Method – The CONTRACTOR's surveyor shall provide any supplementary survey staking required by the CONTRACTOR. During construction, the CONTRACTOR shall check line and grade at 25 foot intervals or less if necessary or directed by the ENGINEER. Variance from the established line and grade shall not be greater than 1/32-inch per inch of pipe diameter and, regardless of pipe size, shall not exceed 1/2-inch for line and 1/4-inch for grade compared to the design line and grade at any given location. Any variances from grade will not be allowed if such variance results in a level or reverse-sloping invert.

C. Staking of Final Pavement Line and Grade – CONTRACTOR shall provide staking as necessary to meet the final pavement line and grade tolerance requirements. Final roadway alignments shall match existing alignments. Refer to Special Provisions, Section J – Pavement and Surface Restoration for pavement grade control requirements.

D. Staking of Existing and Replacement Fences – Where existing fences might be impacted by the CONTRACTOR's operations, the CONTRACTOR's surveyor shall survey and record the location of all existing fences with respect to existing rights of way or easement lines or property corners or property lines. The surveyor will set offset stakes for all existing fences that will be partially or totally removed and replaced so that the fences can be reconstructed in the same location with reasonable accuracy. Reasonable accuracy is defined as 1.5-inches on either side of the existing fence centerline. The surveyor will set centerline stakes for any fence replacement. The stakes shall be set on each side lot line of each parcel and at 50 foot stations in between on each parcel.

E. Staking of New and Replacement Sidewalk and Driveways – CONTRACTOR shall provide staking as necessary to lay out new and replacement sidewalk and driveways.

F. For new sewer work, all manhole rim locations and elevations, and all pipe invert elevations at all manholes will be surveyed by the CONTRACTOR's surveyor. Manhole rim data can be surveyed following construction. Pipe invert elevations shall be surveyed within 48 hours following construction of each manhole. Provide pipe invert data to ENGINEER in writing within 24 hours of surveying showing pipe stationing and invert elevations. Payment may be delayed if survey data is not provided for ENGINEER to confirm pipeline construction meets slope and grade requirements. Final as-built information will be provided to the ENGINEER as hard copy as-built mark-ups of the design drawings.

G. Prior to removing any existing pavement markings or striping, the CONTRACTOR shall survey the existing striping and pavement marking layout and submit the survey documentation to the ENGINEER.

H. Following paving operations, the CONTRACTOR shall place control points for re-establishing striping lines every 50 feet on tangent and every 25 feet on a curve. Using these control points, the CONTRACTOR shall layout a continuous narrow guideline for each line, along one edge of, or uniformly offset from the intended permanent line location. Do not proceed with installation of the striping until the guidelines are approved by the ENGINEER.

I. The CONTRACTOR shall be responsible for protecting and/or re-setting horizontal and vertical alignment data following the initial staking.

J. The CONTRACTOR shall provide traffic control during the ENGINEER's staking of initial horizontal and vertical alignment data.

1.6 Protection of Survey Markers

A. Permanent Survey Markers

1. The CONTRACTOR shall take necessary measures to insure the preservation of survey monuments, stakes, lot stakes and bench marks. The CONTRACTOR shall not disturb permanent survey monuments, stakes, lot stakes or bench marks without the consent of the ENGINEER, and shall notify the ENGINEER and bear the expense of replacing any that may be disturbed. When a change is made in the finished elevation of the pavement of any roadway in which a permanent survey monument is located, the monument cover shall be adjusted to the new grade without disturbing the underlying monument.

2. The CONTRACTOR shall research and identify any existing survey monuments, stakes, lot stakes, bench marks or other permanent survey monumentation in the vicinity of the project that could be disturbed as a result of the CONTRACTOR's activities. The CONTRACTOR shall perform a pre-construction survey of any such monuments and set temporary offsets for the purpose of re-establishing the permanent monuments following construction. Following construction, the CONTRACTOR shall re-set permanent survey monuments, stakes, lot stakes, bench marks or other permanent survey monumentation. The CONTRACTOR shall file the surveys with Lane County in accordance with all applicable laws and codes.

B. Construction and Survey Markers

1. The CONTRACTOR shall preserve construction survey stakes and markers for the duration of their usefulness during construction. If survey stakes are lost or disturbed by the CONTRACTOR and need to be replaced, the CONTRACTOR shall restore the stakes or markers and shall bear the expense of performing that work.

2. At the completion of construction and upon approval of the ENGINEER, the CONTRACTOR shall remove from the construction site all construction and temporary stakes and markers.

END OF SECTION

SPECIAL PROVISIONS

SECTION G – Subsurface Investigations

P21080 Franklin/McVay Sanitary Sewer Extension

G1. General

1.1 Description

Subsurface investigations and reporting have been performed for the purpose of obtaining data for the planning and design of this project. Copies of such reporting are attached to the Contract Documents as Supplementary Information. Subsurface samples that have been retained are also available for inspection. Bidders and the CONTRACTOR shall make arrangements for viewing the samples through the ENGINEER's office.

1.2 Limitations

A. The subsurface investigations and reporting are being made available solely for the convenience of the Bidder and shall not relieve the Bidder or the CONTRACTOR of any risk or duty to make examinations and investigations as required by the Contract Documents.

B. It is mutually agreed to by all parties that the written reports are reference documents and are not part of the Contract Documents, that the subsurface investigations are for the purpose of obtaining data for planning and design of the project, and that the data concerning borings and test pits is intended to represent with reasonable accuracy conditions and material found in specific borings and test pits at the time the borings and test pits were made.

C. It is expressly understood and agreed that the OWNER and ENGINEER assume no responsibility whatsoever in respect to the sufficiency or accuracy of the investigation thus made, the records thereof, or of the interpretations set forth therein, or made by the OWNER in his use thereof; and there is no warranty or guarantee, either expressed or implied, that the conditions indicated by such investigations, or records thereof, are representative of those existing throughout such areas, or any part, or that unforeseen developments may not occur.

D. The OWNER's subsurface investigations and reporting are made available to Bidder or CONTRACTOR only on the basis of the understandings and agreement herein stated.

END OF SECTION

SPECIAL PROVISIONS

SECTION H – Dewatering

P21080 Franklin/McVay Sanitary Sewer Extension

H1. General

1.1 Description

A. The CONTRACTOR shall provide portable pumps and water control service for the entire project, including water control for all excavations and dewatering for all project structures and utilities until project completion.

B. CONTRACTOR shall implement all measures required to ensure that receiving stream water quality is not negatively impacted by discharge from dewatering systems, and that all regulatory requirements are complied with, including but not limited to settling ponds, special treatment systems, filtration bags, check dams, Baker Tanks, etc.

C. All work shall comply with all permit conditions and limitations including those contained in the City's DEQ NPDES 1200-CA permit, and all other permits and regulations.

D. CONTRACTOR should anticipate that significant dewatering efforts may be required to complete the sewer installation. Due to the nature of the local geology, the close proximity of the project to the Willamette River, and the potential for relatively high and variable groundwater levels in the area, large localized flows of groundwater may be encountered and could result in areas of instability of the trench cut face. CONTRACTOR's attention is directed to the geotechnical investigation report included as supplementary information located in the appendix.

E. Water will be allowed to be discharged to the existing piped or open conveyance storm drainage system provided that all silt has been removed and that all water quality requirements contained in the City's NPDES 1200-CA Permit are met.

1.2 Submittals

The CONTRACTOR shall submit a dewatering plan to be reviewed by the ENGINEER prior to the beginning of construction activities requiring dewatering. Review by the ENGINEER of the CONTRACTOR's design shall not be construed as a detailed analysis of the adequacy of the dewatering system, nor shall any provisions of the above requirements be construed as relieving the CONTRACTOR of its overall responsibility and liability for the work.

1.3 Quality Control

A. It shall be the sole responsibility of the CONTRACTOR to control the rate and effect of the dewatering in such a manner as to avoid all objectionable settlement and subsidence.

B. All dewatering operations shall be adequate to assure the integrity of the finished project and shall be the responsibility of the CONTRACTOR.

C. Where the critical structures or facilities exist immediately adjacent to areas of proposed dewatering, reference points shall be established and observed at frequent intervals to detect any settlement which may develop. The responsibility for conducting the dewatering operation in a manner which will protect adjacent structures and facilities rests solely with the CONTRACTOR. The cost of repairing any damage to adjacent structures and restoration of facilities shall be the responsibility of the CONTRACTOR.

H2. Products

2.1 Equipment

Dewatering, where required, may include the use of well points, sump pumps, temporary pipelines for water disposal, rock or gravel placement, settling ponds, settling tanks, and other means. Standby pumping equipment shall be maintained on the jobsite.

H3. Execution

3.1 Dewatering

A. The CONTRACTOR shall provide all equipment necessary for dewatering. The CONTRACTOR shall have on hand, at all times, sufficient pumping equipment and machinery in good working condition and shall have available, at all times, competent workers for the operation of the pumping equipment. Adequate standby equipment shall be kept available at all times to insure efficient dewatering and maintenance of dewatering operation during power failure.

B. Dewatering for structures and pipelines shall commence when groundwater is first encountered, and shall be continuous until such times as water can be allowed to rise in accordance with the provisions of this Section or other requirements.

C. At all times, site grading shall promote drainage. Surface runoff shall be diverted from excavations. Water entering the excavation from surface runoff shall be collected in shallow ditches around the perimeter of the excavation, drained to sumps, and be pumped or drained by gravity from the excavation to maintain a bottom free from standing water.

D. Dewatering shall at all times be conducted in such a manner as to preserve the undisturbed bearing capacity of the subgrade soils at proposed bottom of excavation.

E. If foundation soils are disturbed or loosened by the upward seepage of water or an uncontrolled flow of water, the affected areas shall be excavated and replaced with drain rock at no additional cost to the OWNER.

F. The CONTRACTOR shall maintain the water level below the bottom of excavation in all work areas where groundwater occurs during excavation construction, backfilling, and up to acceptance.

G. Flotation of new and existing facilities shall be prevented by the CONTRACTOR by maintaining a positive and continuous removal of water. The CONTRACTOR shall be fully responsible and liable for all damages which may result from failure to adequately keep excavations dewatered.

H. If well points or wells are used, they shall be adequately spaced to provide the necessary dewatering and shall be sandpacked and/or other means used to prevent pumping of fine sands or silts from the subsurface. A continual check by the CONTRACTOR shall be maintained to ensure that the subsurface soil is not being removed by the dewatering operation.

I. The CONTRACTOR shall dispose of water from the work in a suitable manner without damage to the environment or adjacent property. The CONTRACTOR shall be responsible for obtaining any permits that may be necessary to dispose of water. No water shall be drained into work built or under construction without prior consent of the ENGINEER. Water shall be filtered using an approved method to remove sand and fine sized soil particles before disposal into any drainage system.

J. The release of groundwater to its static level shall be performed in such a manner as to maintain the undisturbed state of the natural foundation soils, prevent disturbance of compacted backfill and prevent flotation or movement of structures, pipelines, and sewers.

K. Dewatering of trenches and other excavations shall be considered as incidental to the construction of the work and all costs thereof shall be included in the various contract prices in the bid forms.

END OF SECTION

SPECIAL PROVISIONS

SECTION I – Earthwork

P21080 Franklin/McVay Sanitary Sewer Extension

I1. General

1.1 Description

Work covered in this section includes general excavation, fill and backfill work.

1.2 Submittals

A. Submit results of aggregate sieve analysis and standard proctor tests for all granular material.

B. See Special Provisions, Section D – Submittals for CONTRACTOR submittals.

1.3 Reference Specifications, Codes and Standards

A. Commercial Standards

ASTM C 94	Specification for Ready-Mixed Concrete
ASTM C 403	Test Method for Time of Setting Concrete Mixtures by Penetration Resistance
ASTM D 422	Method for Particle-Size Analysis of Soils
ASTM D 698	Test Methods for Moisture-Density Relations of Soils and Soil-Aggregate Mixtures, Using 5.5-lb (2.49-kg) Rammer and 12-inch (304.8-mm) Drop (AASHTO T-99)
ASTM D 2487	Classification of Soils for Engineering Purposes
ASTM D 2922	Test Methods for Density of Soil and Soil-Aggregate in Place by Nuclear Methods (Shallow Depth)
ASTM D 4253	Test Methods for Maximum Index Density of Soils Using a Vibratory Table
ASTM D 4254	Test Methods for Minimum Index Density of Soils and Calculation of Relative Density

B. Reference Standards

Refer to revised City of Springfield 1994 Standard Construction Specifications, Section 301, Earthwork, Section 401, Trenching, and to the 1998 revisions. The following temporary amendments to the Standard Construction Specifications will also apply.

1.4 Classification of Excavation

A. Modify Sections 301.1.03A, and 401.1.02A, Rock Excavation, as follows:

Replace Section 301.1.03A and 401.1.02A with the following:

Rock Excavation

A. Rock excavation is defined as the removal of rock by systematic and continuous drilling hammering, breaking, splitting or other approved methods. Rock is defined as material including boulders, solid bedrock, or ledge rock, which, by actual demonstration, cannot be reasonably excavated with suitable power excavation equipment. Suitable machinery is defined as a track-mounted hydraulic excavator of the 52,800 to 72,500 pound class equipped with a single shank ripper. The ENGINEER may waive the demonstration if the material encountered is well-defined rock. The term "rock excavation" shall be understood to indicate a method of removal and not a geological formation.

Before the removal of rock by the methods described above will be permitted, the CONTRACTOR shall expose the material by removing the common material above it and then notify the ENGINEER who, with the CONTRACTOR or his representative, will measure the amount of material to be removed.

In trench excavations, boulders or pieces of concrete below grade larger than one half (1/2) cubic yard will be classified as rock if removal by the methods described above are actually required and used for their removal from the trench. If concrete treated base (CTB) is encountered in trench excavations and requires removal by the methods described above, it will be classified as rock. If CTB is encountered and is mechanically removed without the methods described above it will be considered common excavation.

If material, which would be classified as rock by the definition above and elsewhere within these specifications, is mechanically removed without the use of the methods described above, it will be considered common excavation. If equipment larger than the "suitable machinery" as defined above is brought on the project site for the sole purpose of rock removal without using the methods described above, then such removal will be considered rock excavation.

B. The use of explosives for excavation of rock is not allowed on this project.

END OF SECTION

SPECIAL PROVISIONS

SECTION J – Pavement and Surface Restoration

P21080 Franklin/McVay Sanitary Sewer Extension

J1. General

1.1 Scope

This section covers the work necessary to furnish and install asphalt concrete pavement restoration for trenches and roadway paving. All work shall conform to the specifications of this Section, Lane County Standards and City of Springfield Standard Specifications except as modified herein. In the case of discrepancy the more stringent provisions shall apply.

1.2 Reference Standards

A. Refer to the revised 1994 City of Springfield Standard Construction Specifications, Section 310 Asphalt Concrete Pavement, and Section 407 Resurfacing Trench Areas, with 1998 revisions. The following temporary amendments to the City of Springfield Standard Construction Specifications will also apply.

B. Refer to the latest version of the Oregon Department of Transportation (ODOT) Standard Specifications for Construction, Section 00745 – Hot Mixed Asphalt Concrete (HMAC) and Section 00730 – Emulsified Asphalt Tack Coat.

C. Refer to Standard Provisions, Section K - Pavement Markings for pavement marking, striping and legend requirements.

1.3 Submittals

A. Job mix Certification from Lane County Materials Laboratory to be submitted prior to placement of asphalt.

B. Asphalt truck delivery tickets to be submitted at the end of each work day when asphalt is placed.

1.4 HMAC Mix Classifications

Where "Class B" and "Class C" mixes are identified on the Plans and in the City of Springfield Standard Construction Specifications, they are understood to be Level 2, 3/4-Inch Dense HMAC and Level 3, 1/2-Inch Dense HMAC, respectively, as defined in the ODOT Standard Specifications for Construction.

J2. Products

2.1 HMAC mix designs shall be approved by Lane County Public Works prior to use.

2.2 Replace the City of Springfield Standard Construction Specifications, Sub-Section 310.2.00 MATERIALS with the ODOT Standard Specifications for Construction Sub-Sections 00745.00 through 00745.30 as modified below.

SECTION 00745 – HOT MIXED ASPHALT CONCRETE (HMAC)

Comply with Section 00745 of the Standard Specifications modified as follows:

00745.00 Scope - Add the following paragraph(s) to the end of this subsection:

The CONTRACTOR may use warm mix asphalt concrete (WMAC) as a substitute for HMAC on all lifts. WMAC will be subject to all requirements for HMAC in Section 00745, except as modified in these special provisions. The term WMAC is interchangeable with HMAC throughout this Section.

00745.02 Definitions – Add the following definition to this subsection:

Warm Mix Asphalt Concrete (WMAC) - An asphalt concrete mix following all requirements of HMAC, except that through use of approved additives or processes, it is mixed, placed, and compacted at lower temperatures.

Add the following sentence and bullet items to the Lot Size definition:

In the event that more than one road appears in the contract, roads may be evaluated on an individual basis. Small roads with similar characteristics may be grouped together as the ENGINEER elects.

- A new lot will be established for WMAC technology.
- Material produced under the same JMF, but placed in different lifts, will be considered to be a separate lot.
- Small lot size, roads containing asphalt quantities less than 1,750 tons will be evaluated on the basis of test results from a minimum of three (3) random samples.

Delete the words "1,000 tons" and replace with "750 tons" from the Sublot Size definition.

00745.03 Reclaimed Asphalt Pavement (RAP) Material - In the paragraph that begins "The amount of…", replace the sentence that begins "The amount of…" with the following sentence:

The amount of asphalt cement in the RAP shall be established in the mixture design phase according to ODOT TM 319 and the ODOT CONTRACTOR Mix Design Guidelines for Asphalt Concrete or other method if approved by the ENGINEER.

Add the following subsection:

00745.04 Reclaimed Asphalt Shingles (RAS) - Reclaimed asphalt shingles (RAS) used in the production of new HMAC is optional. Either manufacturer waste (post-manufacturer) RAS or tear-off (post-consumer) RAS may be used. Manufacturer waste RAS is processed asphalt shingle material derived from manufacturer's shingle scrap. Tear-off RAS is processed asphalt shingle material derived from shingle scrap removed from structures. All percentages are based upon dry weights for calculations.

(a) Processing Shingles - Process the RAS by grinding at ambient temperature so that 100% of the shredded pieces are less than 1/2 inch in any dimension and that 90% are less than 3/8 inch in any dimension when sampled according to AASHTO T 2 and tested according to AASHTO T 27. Sample and test the processed RAS for gradation at a frequency of one test for every 50 tons of RAS processed.

(b) Harmful Substances - Certify that the RAS does not contain asbestos fibers according to the policies and procedures established by the Department of Environmental Quality. Test deleterious

materials according to ODOT TM 335 at a frequency of one test for every 50 tons of RAS material. The percentage of deleterious materials shall be limited to 1.0%. If fine aggregate will be added as an anti-clumping agent, sample and test processed RAS for harmful substances before adding the fine aggregates.

(c) Anti-Clumping Additive - Fine aggregate meeting the requirements of 00745.10(c) may be added to the RAS in a quantity not to exceed 4% by weight of RAS to keep the material workable and to prevent conglomeration of the shingle particles in the stockpile. Any added fine aggregate for these purposes shall be taken into account in the mix design. RAS may also be blended with RAP in controlled percentages to preclude clumping. Stockpiled RAS shall not be contaminated by dirt or other foreign materials.

(d) Allowable Percentages - No more than 5.0% RAS by total weight of aggregate will be allowed in HMAC mixtures. The maximum allowable percentage of asphalt binder replacement shall be restricted to 20.0% for base courses and 15.0% for wearing courses in HMAC containing only RAS.

When RAS is used in conjunction with RAP, the maximum allowable percentage of binder replacement shall be restricted to 30.0% for base courses and 25.0% for wearing courses.

(e) Establishing Mix Design Inputs - For HMAC mixtures containing RAS or a combination of RAP and RAS, following any addition of fine aggregate as an anti-clumping agent, test the material according to ODOT TM 319 to establish the asphalt content, material specific gravities, and gradation. Develop mixture designs according to the ODOT CONTRACTOR Mix Design Guidelines for Asphalt Concrete.

00745.10 Aggregate - In the paragraph that begins "Provide and stockpile…", remove the words "and RAP aggregates".

Add the following paragraph:

Production crushing and stockpiling of aggregate for use in HMAC will be at the sole discretion of the CONTRACTOR in accordance to Section 00165 of these Special Provisions.

00745.10(a-1) Separated Sizes – Delete the third sentence from the first paragraph.

00745.10(a-2) Scalping – Delete this subsection.

00745.10(a-5) Fractured Faces – In the sentence that begins "provide crushed aggregate…", replace "AASHTO TP 61" with AASHTO T 335".

00745.10(b-2) Separated Sizes – Delete this subsection.

00745.10(b-3) Grading – Delete all but the first sentence of this subsection.

00745.10(c-2) Separated Sizes – Delete this subsection.

00745.10(c-3) Grading – Replace the tolerance list with the following tolerance list:

	Separated Sizes		
	No. 4 - 0	No. 4 - No. 8	No. 8 - 0
	Percent Passing (by Weight)		
Sieve Size	T	T	T

3/8"	– 1	– 1	–
No. 4	± 7	± 10	– 1
No. 8	± 7	± 7	± 10
No. 16*	–	–	–
No. 30	± 7	± 5	± 8
No. 50*	–	–	–
No. 100*	–	–	–
No. 200	± 3.0	± 2.0	± 4.0

* Report percent passing sieve when no tolerance is listed

00745.10(c-4) Combination of Fine Aggregate for Testing – Replace this subsection, except for the subsection number and title, with the following:

Blend together fine aggregate produced in two separate sizes at a 1:1 ratio when testing for sand equivalent.

00745.10(c-5) Blend Sand – Replace the paragraph that begins "No natural or uncrushed…" with the following paragraph:

No natural or uncrushed blend sand will be allowed in Open Graded HMAC or in Level 4 HMAC. Blend sand is allowed for Levels 1, 2, and 3 mixes. For these mixes, establish the target gradation and produce all material within the following tolerances (T):

Replace the paragraph that begins "Determine sieve analysis…" with the following paragraph:

Determine sieve analysis according to AASHTO T 27 and AASHTO T 11. Do not use more than 6% natural or uncrushed blend sand, by weight, in the total aggregate. Provide a means of verifying and documenting the amount of blend sand added to the aggregate.

00745.10(d) RAP Aggregate - Replace this subsection with the following subsection:

00745.10(d) RAP and RAS Aggregate - Blend the RAP, RAS, or combined RAP and RAS material with new aggregate to provide a mixture conforming to the JMF within the tolerances specified.

00745.10(f) Aggregate Production Quality Control – Delete the second sentence.

00745.10(g) Preproduced Aggregate – Replace this subsection, except for the subsection number and title, with the following:

The material shall meet the requirements of 00745.10.

00745.11(a) Asphalt Cement – Add the following:

Use PG 64-22 grade asphalt for dense graded HMAC unless otherwise approved by ENGINEER. Use PG 64-22ER for open graded HMAC, or grade approved by ENGINEER.

In addition to the requirements in the ODOT Standard Specifications for Asphalt Materials, the PG 64-22ER grade for HMAC shall meet the following limit when tested according to AASHTO T 301 "Standard Method of Test for Elastic Recovery Test of Asphalt Materials by Means of Ductilometer". The samples will be conditioned per AASHTO T 240 "Standard Method of Test for Effect of Heat and Air on a Moving

Film of Asphalt (RTFOT) prior to testing per AASHTO T 301. The specified Temperature for section 3.3 of the AASHTO T 301 procedure shall be 77°F.

% Elastic Recovery – 50 minimum.

00745.11(b) Asphalt Cement Additives - Replace this subsection, except for the subsection number and title, with the following:

Use standard recognized asphalt cement additive products of known value for the intended purpose and approved for use on the basis of laboratory tests. Asphalt cement additives shall have no deleterious effect on the asphalt material and be completely miscible. Do not use silicones as an additive. Add the following asphalt cement additives when required by the JMF:

- Anti-stripping asphalt cement additives to prevent stripping or separation of asphalt coatings from aggregates to satisfy the TSR specified in 00745.13.

- Asphalt cement admixtures used to aid in the mixing or use of asphalt mixes or for experimental purposes.

When WMAC is used, select one of the WMAC Technologies and process and additive types listed below or approved by the ENGINEER:

WMAC Technology	Process and Additive Type	Supplier
LEA-CO	Foaming Process	Advanced Concepts Engineering Co.
Eco-Foam II	Foaming Process	AESCO/Madsen
Redi-Set WMX	Chemical Additive	Akzo Nobel Surfactants, Inc.
CECABASE RT	Chemical Additive	Arkema Group
Aspha-Min (Synthetic Zeolite)	Foaming Process	Aspha-Min
Double Barrel Green System	Foaming Process	Astec Industries
Green Machine	Foaming Process	Gencor Industries
HGrant Warm Mix System	Foaming Process	Herman Grant Company
Qualitherm	Chemical Additive	Iterchimica
Aquablack Warm Mix Asphalt	Foaming Process	Maxam Equipment Inc.
Low Emission Asphalt	Chemical Additive	McConnaughay Technologies
Evotherm	Chemical Additive	MeadWestvaco Asphalt Innovations
Meeker Warm Mix	Foaming Process	Meeker Equipment Corp. Inc.
Advera (Synthetic Zeolite)	Foaming Process	PQ Corporation
Sasobit	Organic Additive	Sasol Wax Americas, Inc.
Shell Thiopave	Chemical Additive	Shell
Accu-Shear Dual Warm-Mix Additive System	Foaming Process	Stainsteel
Tri-Mix Warm Mix Injection	Foaming Process	Tarmac Inc.
Warm Mix Asphalt System	Foaming Process	Terex Roadbuilding

Submit the proposed WMAC technology to be used and a plan for its implementation at the pre-construction conference.

Comply with the manufacturer's recommendations for incorporating additives and WMAC technologies into the mix. Comply with manufacturer's recommendations regarding receiving, storing, and delivering the additives.

00745.11(c) Aggregate Treatment - In the paragraph, replace the words "RAP materials" with the words "RAP, RAS, or combined RAP and RAS materials".

00745.13 Job Mix Formula (JMF) Requirements - Add the following paragraphs and bullets after the paragraph that begins "Provide a range of proposed...":

A separate JMF will be issued for WMAC.

When WMAC is used, provide the following information in addition to the requirements listed for HMAC:

- WMAC technology and WMAC additives information.
- WMAC technology manufacturer's established recommendations of usage.
- WMAC technology manufacturer's established target rate for water and additives, the acceptable variation for production, and documentation showing the impact of excessive production variation.
- WMAC technology material safety data sheets if applicable.
- Temperature range for mixing.
- Temperature range for compacting.
- Except for foaming technology, asphalt binder performance grade test data of the asphalt binder and chemical additive at the manufacturer's recommended dosage rate.
- Except for foaming technology, WMAC mixture performance test results according to 00745.13(c). Perform testing for foaming technology on the production mix on specimens compacted at WMAC compaction temperatures.

00745.13(a) CONTRACTOR Provided JMF – Delete first paragraph and add the following:

A CMDT will prepare, sign and submit a JMF to the ENGINEER and Lane County Public Works for each mixture according to ODOT CONTRACTOR Mix Design Guidelines for Asphalt Concrete. Lane County Public Works will verify the performance characteristics of all CONTRACTOR provided JMF. Submit material samples for verification testing no later than March 1 of the calendar year of the anticipated use of HMAC mixture. Furnish representative samples of materials to be used in the JMF verification testing as follows:

Materials	Amount
New Coarse Aggregate	100 lbs *
New Fine Aggregate	100 lbs
Reclaimed Asphalt Concrete	45 lbs
Hydrated Lime	5 lbs
Mineral Filler	5 lbs
Asphalt Cement (without antistrip)	3 gal in 1-qt cans
Antistrip Additive	1 qt

*If coarse or fine aggregate is in multiple stockpiles, divide the submittal evenly between stockpiles.

Verification testing will use Gyratory compaction methods.

00745.13(b) JMF Requirements – Add the following:

A request for an adjustment to the JMF targets may be made to the ENGINEER by the CONTRACTOR's CAT-II for approval by Lane County Public Works. The requested change will be reviewed and documented by the ENGINEER and forwarded to Lane County Public Works for acceptance. If acceptable, a revised JMF will be allowed. Clearly document the sublot test for which the adjusted targets are in effect. Adjustments for gradation shall not exceed the tolerances specified below. Adjustments for AC content shall be within 0.5% of the original JMF, but shall not exceed the requirements of 00745.03. Regardless of these tolerances, the adjusted JMF shall be within the mixture specification control points of 00745.12. If a redesign of the mixture becomes necessary, submit a new JMF according to the requirements of the Specifications.

Aggregate Passing Sieve Size	(%) From JMF
No. 4	+/- 2
No. 8	+/- 1
No. 30	+/- 1
No. 200	+/- 0.5

Field adjustments will not be made unless the change produces material of equal or better quality. Adjustments beyond these limits will require development of a new JMF according to 00745.13(b). The adjusted JMF, plus or minus the allowed tolerances, shall be within the broadband limits specified in 00745.12(b).

00745.13(c) Performance Test – Delete this subsection.

00745.14 Tolerances and Limits - Replace the tolerance list with the following tolerance list:

Gradation Constituent	Dense-Graded HMAC Type				Open-Graded HMAC TYPE		
	1"	3/4"	1/2"	3/8"	3/4"	1/2"	ATPB
1 1/2"	JMF						
1"	90 - 100%	JMF ± 5%*			99 - 100%		99 - 100%
3/4"	JMF ± 5%	90 - 100%	JMF ± 5%*		85 - 96%	99 - 100%	85 - 95%
1/2"	JMF ± 5%	JMF ± 5%	90 - 100%	JMF ± 5%*	55 - 71%	90 - 98%	35 - 68%
3/8"**	–	–	–	90 - 100%	–	–	–
No. 4	JMF ± 5%	JMF ± 5%	JMF ± 5%	JMF ± 5%	JMF ± 5%	JMF ± 5%	JMF ± 5%
No. 8	JMF ± 4%	JMF ± 4%	JMF ± 4%	JMF ± 4%	JMF ± 4%	JMF ± 4%	JMF ± 4%
No. 16**	–	–	–	–	–	–	–
No. 30	JMF ± 4%	JMF ± 4%	JMF ± 4%	JMF ± 4%	JMF ± 4%	JMF ± 4%	–
No. 50**	–	–	–	–	–	–	–
No. 100**	–	–	–	–	–	–	–
No. 200	JMF ± 2.0%	JMF ± 2.0%	JMF ± 2.0%	JMF ± 2.0%	JMF ± 2.0%	JMF ± 2.0%	JMF ± 2.0%

* Maximum not to exceed 100%
** Report percent passing sieve when no tolerance is listed

In the "Constituent of Mixture/HMAC All Types" list, in the item that begins "Moisture content at…", replace "WAQTC TM 6" with "AASHTO T 329".

Under the "Constituent of Mixture/HMAC All Types" list, add the following after "RAP Content…":

RAS Content - ODOT TM 321	JMF ± 1.0%
RAP/RAS Content - ODOT TM 321	JMF ± 2.0%

Add the following sentence to the of the paragraph that begins "When a JMF…":

Full tolerance will be given for RAS or combined RAP and RAS content even if it exceeds the limits established in 00745.04.

In the paragraph that begins "Take corrective action…", replace the words, "RAP content", in two places with the words "RAP, RAS, or combined RAP and RAS content" in both places.

00745.16 HMAC Production QC/QA – Delete subsections (a) and (b) in their entirety and add the following:

Quality control sampling and testing by the CONTRACTOR, as defined by the Standard Specifications, is suggested but not required. The CONTRACTOR is required to perform sufficient testing to insure compliance to the material requirements, for both asphalt mix and compaction.

MDV for open graded HMAC may require adjustment. Adjust asphalt content and gradation targets for open graded HMAC during production as directed. The ENGINEER and or OWNER's independent testing agency will document the sublot test for which the adjusted targets are in effect.

00745.16(c) Quality Assurance and Acceptance – Replace this subsection, except for the subsection number and title, with the following:

The OWNER's independent testing agency, according to Section 00165.40 and the following, will perform acceptance sampling and testing of HMAC:

(1) Random Sampling – Random sampling of HMAC shall be performed by the OWNER's independent testing agency according to the following:

(a) Grade Samples – A minimum of one grade sample from each lot or sublot after placing and before rolling. Samples will not be taken within 1 foot of the edge of the panel. Samples will be obtained according to AASHTO T168.

(b) Plant Samples – A minimum of one sample from each lot or sublot from the discharge of the paving plant mixer and before placing into a storage silo or hopper when:

- The nominal compacted thickness as shown on the typical section of the plans, for an entire pavement panel will be less than 1 1/2 inches.
- The paving panel being placed is less than 8 feet wide.
- Paving miscellaneous areas, such as driveways, approaches, guardrail flares, and areas of restricted width or limited length.
- Paving temporary surfacing or leveling courses.
- Paving open-graded mixtures.

(c) Moisture Samples – Moisture samples will be taken from the discharge of the paving plant mixer a minimum once each day, or as directed.

(d) Partial Sublots – Each day, at the end of the production shift, regardless of the project size, the quantity exceeding the 750-ton sublot increment by 250 ton, or less, shall be represented by the previous 750-ton sublot. If the quantity exceeds the 750-ton sublot increment by more than 250 ton, the quantity shall be considered an independent sublot.

(2) Testing – HMAC testing shall be performed by the OWNER's independent testing agency according to the following:

(a) Asphalt Cement Content – Test according to "Asphalt Content by Ignition Method, Lane County Procedure" (a modified AASHTO T308). The test procedure is available from the Lane County Materials Testing Lab.

(b) Aggregate Gradation – Test according to AASHTO T27 test method.

(c) Moisture Content – Test according to AASHTO T255 test method, Microwave Method.

(d) Compaction – Acceptance testing for compaction will be according to Section 00745.49. For any failing sublot of pavement, the CONTRACTOR may request one new backup compaction test on the same day. New nuclear gauge tests will be obtained at new randomly selected sites. The average of these five new nuclear density tests will constitute the backup in-place density of the sublot. The higher of the original and backup test results will prevail.

The ENGINEER may require testing of any area that appears defective in compaction and require further compaction or corrective action on any area that does not meet specifications.

(e) Backup Testing – If the gradation test result of the sieve analysis varies from the JMF by 1.5 times or more from the tolerance limits specified in 00745.14, a backup sample from the random grade sample will be tested. The test result, which yields the highest CPF for that sublot, will be used. If the original and backup test results yield the same CPF, the original test results will be used.

(f) Minimum Pay Factor for Each Constituent – Stop production when the pay factor for any constituent with a weighting factor greater than 1 falls below 0.75. Resume production when the ENGINEER accepts a plan for correction.

00745.17 Small Quantity Acceptance – Replace this subsection, except for the subsection number and title, with the following:

When the quantity of HMAC on a Project is less than 1,750 tons or less than three test results are obtained, the ENGINEER may, at its discretion, accept the HMAC according to Section 00745.16(c) of these Special Provisions. The test results will be evaluated in accordance to 00745.95(a) of these Special Provisions.

00745.17(b) Outside Specifications Limits – Replace the first sentence with the following:

If a sublot sample test result for any constituent is 1.5 times or more outside the specification limit, the ENGINEER will have the backup sample tested.

00745.17(b-2) Backup Out of Specification – Replace this subsection, except for the subsection number and title, with the following:

If the backup sample test results are out of specification, an adjustment will be calculated according to 00745.95(a-1). The test results that produce the lowest Cumulative Weighted Deviation will be used in the price adjustment calculation.

00745.17(b-3) In Place Samples – Delete this subsection:

00745.21 HMAC Mixing Plant - Add the following to the end of this subsection:

(g) WMAC Mixing Production - Modify the asphalt mixing plant as required by the manufacturer to introduce the WMAC technology. Plant modifications may include additional plant instrumentation, the installation of asphalt binder foaming systems and WMAC additive delivery systems, tuning the plant burner, and adjusting the flights in order to operate at lower production temperatures and reduced tonnage. Document the integration of plant controls and interlocks.

00745.21(c) Vibratory Scalping Devices - In the paragraph, replace the word "RAP" with the words "RAP, RAS, or combined RAP and RAS".

00745.24(a) Steel-Wheeled Rollers - Replace this subsection with the following subsection:

(a) Steel-Wheeled Rollers - Provide steel-wheeled rollers with a minimum gross static weight as follows:

	Level 1 and Level 2	Level 3	Level 4
Breakdown and Intermediate	8 ton	10 ton	12 ton
Finish	6 ton	8 ton	10 ton

J3. Execution

3.1 Replace the City of Springfield Standard Construction Specifications, Sub-Section 310.3.00 CONSTRUCTION with the ODOT Standard Specifications for Construction Sub-Sections 00745.40 through 00745.75 as modified below.

00745.40 Season and Temperature Limitations In the table, for Surface Temperature of Dense Graded Mixes 2 inches to 2 1/2 inches, replace "50 °F" with 40 °F".

00745.43(b) Heating Temperatures - Replace the table with the following:

HMAC Temperature, °F

Grading	Maximum at mixer	Minimum Behind Paver
Dense	350	240
Open	350	205

WMAC Temperature, °F

Grading	Minimum Behind Paver
Dense	215

00745.46 Control of Line and Grade - Add the following paragraphs to the end of this subsection:

Establish references at reasonable intervals for line and grade control of placement operations for the following:

- Before placing each leveling lift.
- Before placing the top base course for new construction.

Line and grade for the top base course of new construction and top leveling lift shall be within 1/2 inch of design line and grade.

00745.48(c) Placing – Add the following:

The ENGINEER will establish leveling locations and paving needs.

Paving equipment used shall be sized appropriately for the size roads listed in the contract. Equipment that is either undersize or oversize for the intended work, which will not produce satisfactory workmanship, will be replaced with appropriately sized equipment.

Change the reference in the last paragraph from 00745.16(b-1) to 00745.13(b) of these Special Provisions.

00745.49 Compaction, QC – Add the following:

The QC program as described in this section of the Standard Specifications will not be used. The OWNER's independent testing agency will perform acceptance compaction testing using procedures as modified or added in these Special Provisions. The CONTRACTOR is responsible to perform sufficient compaction testing to insure minimum compaction requirements have been attained.

00745.49(a-1) Temperature - Add the following after the sentence that begins "Complete breakdown...":

For WMAC, complete breakdown and intermediate compaction before the WMAC temperature drops below 160 °F.

00745.49(b) Normal Pavement (Nominal Thickness 2 inch or Greater) – Replace the subsection heading with the following:

00745.49(b) Normal Pavement (Nominal Thickness 1 1/2 inch or Greater)

00745.49(b-1) General - In the paragraph that begins "Compliance with the density...", replace the sentence that begins "Use the MAMD method..." with the following sentence:

Use the MAMD method of compaction measurement.

Replace the paragraph that begins "For Level 3 and Level 4..." with the following two paragraphs:

For Level 2, Level 3, and Level 4 mixes, construct a control strip at the beginning of work on each JMF on the project according to ODOT TM306. The purpose of the control strip is to determine the maximum density that can be achieved for the JMF, paving conditions, and equipment on the project. Additional control strips are necessary when there is a change in compaction equipment or when JMF targets are adjusted according to 00745.16(b-1-a). The ENGINEER may waive the control strip for irregular areas or areas too small to establish a reasonable roller pattern.

Stop paving if three consecutive control strips fail to achieve the specified density. Take all actions necessary to resolve compaction problems. Do not resume paving until allowed by the ENGINEER.

Add the following to the third paragraph:

Pneumatic tired roller will be required on Level 2 HMAC, unless waived by the ENGINEER.

00745.49(b-2) Random Testing – Delete reference to "QC" in the first sentence.

Add the following after the first sentence:

Random locations will be as determined by the ENGINEER.

00745.49(b-2-a) Testing – Add the following:

Sanding of test locations will not be required.

00745.49(b-2-b) Core Correlations of Nuclear Gauge Readings – Replace this subsection, except for the subsection number and title, with the following:

Core correlation of the nuclear gauge readings is not required. If core correlations are requested, and approved, determine the core correlation factors according to WAQTC TM8 and ODOT TM327. Cut the required cores and patch the core holes with dense graded HMAC.

The party requesting core correlations will pay the costs of coring and lab testing of cores. The costs of nuclear gauge testing performed by each party will be paid by each party.

00745.49(b-3) Moving Average Maximum Density (MAMD) Method - Replace the MAMD list with the following list:

Course of Construction	HMAC
First HMAC lift less than 3 inches placed on aggregate base	91.0 *
All other	92.0

* If any part of the width of a lift at a station requires 91.0%, then the entire width of that lift at that station shall be 91.0%

Delete the last paragraph of this subsection.

00745.49(b-4) Control Strip Method - Delete this subsection.

00745.49(b-5) Test Results – Renumber this subsection to b-4, delete the sentence and replace with the following:

The ENGINEER will provide density test results to the CONTRACTOR within one working day of the ENGINEER's receipt of density test results from the OWNER's independent testing agency.

00745.49(c) Thin Pavement – Replace this subsection, except for the subsection number and title, with the following:

Compaction to a specified density will not be required for leveling, patches, or where the nominal compacted thickness of a course of dense graded mixtures will be less than 1 1/2 inches. Perform breakdown and intermediate rolling until the entire surface has been compacted by at least four coverages of the roller(s). Perform additional coverages, as directed, to obtain finish rolling of the HMAC.

In areas were pre-leveling is greater than 1 1/2 inches, the HMAC shall be compacted to a minimum of 91.0 of the JMF's most recent Maximum Density result.

Add the following subsection:

00745.49(f) Bridge Decks and End Panels - Compaction to a specified density will not be required for HMAC placed on bridge decks and end panels. Perform the same rolling pattern, without vibration, as established by 00745.49(b 1). In the absence of a rolling pattern established by 00745.49(b-1), perform breakdown and intermediate rolling until the entire surface has been compacted by at least four coverages of the rollers. Perform additional coverages, as directed, to obtain finish rolling of the HMAC.

00745.70 Pavement Smoothness - Replace this subsection with the following subsection:

00745.70 Pavement Smoothness - Construct the pavement wearing surface of travel lanes to a profile that does not deviate from longitudinal and transverse smoothness more than the specified limits of 00745.73.

Perform smoothness testing under the supervision of the ENGINEER with equipment furnished and operated by the CONTRACTOR at the CONTRACTOR's expense. Complete all required smoothness testing no later than seven calendar days following final completion of all travel lane paving on the Project. The CONTRACTOR accepts the risk that the smoothness may be affected by exposure to traffic between the date the travel lanes are paved and the date the smoothness testing is completed. If the CONTRACTOR elects to perform smoothness measurements on a day other than the day the pavement is placed, additional traffic control required for smoothness measurement, and not required for other work, will be at the CONTRACTOR's expense.

Add the following subsection:

00745.72 Smoothness Testing Equipment - Furnish all equipment and supplies for determining smoothness.

(a) Straightedge - Provide one 12 foot straightedge.

(b) Rolling Straightedge – Provide one 12 foot rolling straightedge capable of measuring, on an exaggerated scale, deviations in the paved surface, at the center of the scale, to accuracy of 0.002 foot or less. If requested by the ENGINEER, the CONTRACTOR shall demonstrate the accuracy of the measuring device by setting the equipment up on a flat surface and passing the sensing mechanism over an item of known height. In all cases, the equipment shall be subject to acceptance by the ENGINEER.

Add the following subsection:

00745.73 Smoothness Testing and Surface Tolerances - Test according to the following:

(a) General - Test the base and wearing courses with a 12 foot straightedge and a 12 foot rolling straightedge as directed.

(b) Base Course Surface Test:

(1) Transverse - Test with the 12 foot straightedge perpendicular to the centerline, as directed. The pavement surface shall not vary by more than 0.02 foot.

(2) Longitudinal - Test with the 12 foot rolling straightedge parallel to the centerline, as directed. The pavement surface shall not vary by more than 0.02 foot.

(c) Wearing Course Surface Test:

(1) Transverse - Test with the 12 foot straightedge perpendicular to the centerline, as directed. The pavement surface shall not vary by more than 0.02 foot.

(2) Longitudinal – Test with the 12 foot rolling straightedge over the full width of travel lanes for the entire length of the project, or as directed by the ENGINEER. The pavement surface shall not vary by more than 0.015 foot.

(3) Transverse Joints - Test with the 12 foot straightedge parallel to the centerline, as directed. The pavement surface shall not vary by more than 0.02 foot.

(d) Utility Appurtenances - If the CONTRACTOR is required to construct or adjust utility appurtenances, such as manhole covers and valve boxes, the pavement surface shall not vary by more than 0.02 foot.

(e) Shoulders and Paved Medians - Test the base and wearing course with the 12 foot straightedge parallel to and perpendicular to the centerline for shoulders and paved medians. The pavement surface shall not vary by more than 0.02 foot.

00745.75 Correction of Pavement Roughness - Replace this subsection with the following subsection:

00745.75 Correction of Pavement Roughness - Should testing described in 00745.73 show the pavement does not conform to the prescribed limits of deviation, the following shall apply:

(a) General - The CONTRACTOR, under the supervision of the ENGINEER, is responsible for locating areas that require corrective work.

(b) Base Course - If the requirements of 00745.73(b) are not met, correct according to one of the following and retest.

(1) Cold Plane Removal - Profile with equipment meeting the requirements of Section 00620.20 to a maximum depth of 0.03 foot.

(2) Grinder - Profile with abrasive grinder(s), equipped with a cutting head comprised of multiple diamond blades to a maximum depth of 0.03 foot.

(c) Wearing Course - After the CONTRACTOR has located and staked all individual deviations exceeding 0.02 foot, the ENGINEER and the CONTRACTOR shall meet at a mutually agreed upon time and drive the Project together. Each deviation will be evaluated during the drive-through to determine what corrective work will be required. Disagreements will be resolved by the ENGINEER.

Correct all individual deviations identified for corrective work during the drive-through and any transverse joint that exceeds the requirements of 00745.73(c-3) by one of the methods listed below to the specified limits.

(1) Remove and Replace - Remove and replace the wearing surface lift. Removal and replacement is required when in the opinion of the ENGINEER a durable long-term repair of the defect cannot be accomplished by conventional means.

(2) Grind - Profile with abrasive grinder(s) equipped with a cutting head comprised of multiple diamond blades to a maximum depth of 0.3 inch and apply an emulsion fog seal as directed.

Under the observation of the ENGINEER, retest each location requiring corrective work according to 00745.73 with a 12 foot rolling straightedge to verify that the deviation has been corrected to within the 0.02 foot tolerance. Perform all corrective work and surface tolerance testing at the CONTRACTOR's expense, including traffic control.

(d) Utility Appurtenances – If the requirements of 00745.73(d) are not met, the CONTRACTOR shall perform sawcutting, removal and readjustment of the utility appurtenance(s) to the required elevation(s) and/or perform other corrective measures to the satisfaction of the ENGINEER.

(e) Time Limit - Complete correction of all surface roughness within 14 calendar days following notification, unless otherwise directed.

3.2 A PRE-PAVING MEETING SHALL BE REQUIRED 48 HOURS PRIOR TO PAVING.

3.3 Trip tickets shall normally be given to the ENGINEER by the end of the day delivery is made, but in no event shall they be given to the ENGINEER later than 12 noon the following calendar day (Saturday, Sunday, and legal holidays excluded). Trip tickets will be considered as valid only when received by the ENGINEER in accordance with this special provision. All other requirements of the above referenced sub-sections shall apply.

3.4 GEOTEXTILE INSTALLATION – In the event that the City's wet weather construction standard is invoked on this project, refer to Standard Construction Specification 301.1.01 General, the use of geotextile fabric and an additional eight (8) inches of rock substructure will be required. Where specified, geotextile shall be woven and conform to Standard Construction Specification for Subgrade Geotextile. CONTRACTOR shall comply with Standard Construction Specification 308, Geotextile Installation. Payment shall be incidental to the pavement Bid Items.

3.5 The thickness of courses of materials shown on the Plans, given in the Specifications, or established by the ENGINEER is considered to be the compacted thickness. Minor variations are acceptable when within the tolerances specified or when approved by the ENGINEER.

END OF SECTION

SPECIAL PROVISIONS

SECTION K – Pavement Markings

P21080 Franklin/McVay Sanitary Sewer Extension

K1. General

1.1 Scope

This section covers the work necessary to furnish and install permanent pavement markings. All work shall conform to the specifications of this Section, Lane County Standards and City of Springfield Standard Specifications except as modified herein. In the case of discrepancy the more stringent provisions shall apply.

1.2 Reference Standards

A. Refer to the revised 1994 City of Springfield Standard Construction Specifications, Section 317 Permanent Traffic Control, with 1998 revisions. The following temporary amendments to the City of Springfield Standard Construction Specifications will also apply.

B. Refer to the latest version of the Oregon Department of Transportation (ODOT) Standard Specifications for Construction, Section 00850 – Common Provisions for Pavement Markings, Section 00865 – Longitudinal Pavement Markings – Durable, and Section 00867 – Transverse Pavement Markings – Legends and Bars.

C. Manual on Uniform Traffic Control Devices for Streets and Highways published by the U.S. Department of Transportation, Federal Highway Administration.

1.3 Submittals

A. Submit material data for all proposed pavement marking materials. Material data includes, but is not limited to, manufacturer, product name, material type, MSDS, manufacturer's preparation and installation requirements and recommendations.

B. Submit survey documentation of existing striping to the ENGINEER at least seven calendar days before the loss of existing pavement markings.

K2. Products

2.1 Replace all permanent pavement striping, markings and legends to match the existing layout, unless otherwise approved. Longitudinal pavement markings shall be the "durable" type, thermoplastic, extruded, surface, non-profiled. Transverse pavement markings (legends and bars) shall be Type B-HS, preformed, fused thermoplastic film, high skid.

2.2 Replace the City of Springfield Standard Construction Specifications, Sub-Sections 317.2.04 through 317.2.06 with the ODOT Standard Specifications for Construction Sub-Sections 00850.00 through 00850.31, 00865.00 through 00865.31, and 00867.00 through 00867.30 as modified below.

00850.20(b) Equipment for Longitudinal Lines - Replace the paragraph that begins "Use equipment capable of…" with the following paragraph and bullets:

Provide equipment that can:

- Place two parallel lines simultaneously with 4 inch minimum to 12 inch maximum spacings between the two lines.
- Place the entire width of a line in one pass.

Add the following subsection:

00867.31 Manufacturer-Certified Installers - Provide certified installer's according to 00850.31.

2.3 Use the following Materials. Materials for other uses not specified in this paragraph shall be from the QPL.

A. Legends: Preformed Thermoplastic Type B, "Pre-Mark Plus", 125 mil, by Ennis-Flint.

B. Pedestrian Crossings: Preformed Thermoplastic Type B, Pre-Mark Vizigrip (Non-Slip)", 125 mil, by Ennis-Flint.

C. Skip Lines and Longitudinal Lines: Method B Thermoplastic, "Permaline" with SWARCO beads 3130, by Ennis-Flint.

K3. Execution

3.1 Replace the City of Springfield Standard Construction Specifications, Sub-Sections 317.3.03 through 317.3.04B with the ODOT Standard Specifications for Construction Sub-Sections 00850.40 through 00850.75, 00865.40 through 00865.75, and 00867.40 through 00867.75 as modified below.

00850.40 Projects Without Striping Plans and 00850.41 Projects With Striping Plans - Replace these two subsections with the following subsection:

00850.40 Plans:

(a) Projects With Complete Striping Plans - When striping Supplemental Drawings are included in the Project, install striping as shown.

(b) Projects With Partial Striping Plans - When partial Supplemental Drawings are included in a Project, install striping according to the following:

- In areas where striping details are shown on the Supplemental Drawings, install striping as shown.
- In areas where striping details are not shown on the Supplemental Drawings, install striping to match the original striping configuration with the appropriate striping items.

(c) Projects Without Striping Plans - When striping Supplemental Drawings are not included in the Project, install striping to match the original striping configuration with the appropriate striping items.

For Projects with partial striping plans or Projects without striping plans, document all existing striping, that is not shown, by survey according to Standard Provisions, Section F - Construction Survey Work. Submit survey documentation to the ENGINEER at least seven calendar days before the loss of existing pavement markings.

00850.46 Placement Tolerance - Replace the bullet that begins "Thickness of lines…" with the following bullet:

- Thickness of flat, surface applied lines: + 1/3 of the specified thickness, – 1/10 of the specified thickness

00850.47(b) Curing of Material - Replace this subsection, except for the subsection number and title, with the following:

At the time of installation, note and report to the ENGINEER all soft spots and darkened areas that may result in poor bonding and durability of the pavement markings.

00850.47(c) Retroreflectivity - Replace this subsection, except for the subsection number and title, with the following:

Except for paint applications, evaluate longitudinal and transverse marking retroreflectivity according to ODOT TM 777. Acceptance will be according to the following:

- Longitudinal Markings - Each longitudinal marking sublot will be accepted if the average of the measurements and at least 90 percent of the individual measurements within the sublot meet or exceed the required minimum initial retroreflectivity.

  If more than 10 percent but no more than 25 percent of the individual measurements in a sublot fail, take additional measurements within the sublot according to ODOT TM 777, Section 7.2.1 halfway between the measurements taken during initial evaluation. Combine these additional measurements with the initial measurements and re-evaluate the sublot. If the combined sublot measurements do not meet the 90 percent criteria, remove and replace the entire longitudinal marking sublot at no additional cost to the OWNER.

  If more than 25 percent of the individual measurements in a sublot fail remove and replace the entire longitudinal marking sublot at no additional cost to the OWNER.

- Transverse Markings - Each transverse marking sublot will be accepted if the average of the measurements and at least 90 percent of the individual measurements within the sublot meet or exceed the required minimum initial retroreflectivity.

  If more than 10 percent but not more than 25 percent of the individual measurements in a sublot fail, take additional measurements within the sublot according to ODOT TM 777, Section 7.2.2. The ENGINEER will randomly select an equal number of untested transverse markings to test. Combine these additional measurements with the initial measurements and re-evaluate the sublot. If the combined sublot measurements do not meet the 90 percent criteria, remove and replace the entire transverse marking sublot at no additional cost to the OWNER.

  If more than 25 percent of the individual measurements in a sublot fail remove and replace the entire transverse marking sublot at no additional cost to the OWNER.

00850.70 Disposal of Waste - Replace this subsection with the following subsection:

00850.70 Disposal of Materials - Dispose of all materials according to 00290.20.

00865.45 Installation - Replace this subsection, except for the subsection number and title, with the following:

Place durable markings only when the manufacturer's representative determines that the pavement is ready for the pavement marking material.

Apply reflective elements at a rate to obtain the following minimum initial retroreflectivity readings:

White	-	250 mcd/m2/lx
Yellow	-	200 mcd/m2/lx

Apply marking materials by one or more of the following methods:

Method A: Extruded Markings - Apply markings with an extrusion process and according to the following:

- For grooved markings, grind the slot depth as shown. Apply the specified marking material into the slot so the slot is filled from edge to edge as shown. The top of the marking shall be flat or slightly convex.
- For profiled markings, place lines and bumps straight and square.

00867.40 General - Delete this subsection.

00867.45 Installation - Replace the bullet that begins "Type B: Preformed..." with the following three bullets:

- Type B: Preformed, Fused Thermoplastic Film - Install preformed, fused thermoplastic film as shown.

- Type B-HS: Preformed, Fused Thermoplastic Film High Skid - Install preformed, fused thermoplastic film high skid, that has intermixed reflective elements with factory installed crushed glass or aggregate on the surface for all staggered continental crosswalks, bike lane stencils, bike path railroad crossings, and other transverse pavement markings as shown.

- Type AB: Install Type A, Type B or Type B-HS as the CONTRACTOR elects.

END OF SECTION

SPECIAL PROVISIONS

SECTION L – Sanitary Sewer Main Cleaning and TV Inspection

P21080 Franklin/McVay Sanitary Sewer Extension

L1. General

1.1 Description

A. This Section includes all labor, materials, equipment, and incidentals necessary for cleaning and internal TV inspection of sanitary sewer main lines. Work under this section shall include, but not be limited to: cleaning of mainlines and manholes and TV inspection of designated sanitary sewer main lines, traffic control as shown or required by all local, state, and federal agencies, and all other incidental work specified or shown in the Contract Documents.

B. CONTRACTOR shall perform all work in accordance with Federal OSHA and State safety requirements, including those for confined space entry.

1.2 Submittals

A. Submittals shall be in accordance with the requirements of these Contract Documents, and shall include the following:

1. Information on all cleaning and TV inspection equipment proposed for use by the CONTRACTOR, including a listing of size, type, and capabilities of each piece of equipment.

2. A traffic control plan that shall include but not be limited to: staging sites, impacts to traffic patterns, considerations of bus traffic, as well as proposed signs, detours, and flaggers. See Special Provisions, Section B - General Conditions.

1.3 CONTRACTOR'S Record Drawings

A. The CONTRACTOR shall maintain a detailed record, including a neatly marked set of construction drawings if applicable, of the sanitary sewer pipes associated with this work, including but not limited to: any differences in alignment, pipe size, and manhole or cleanout location discovered during the progress of the work. Records and drawings shall be kept current with the work as it progresses and shall be subject to inspection by the ENGINEER at any time.

B. The location, alignment, lengths, and sizes of the sanitary sewer lines shown on the drawings are compiled from available records and/or field surveys. The ENGINEER does not guarantee the completeness of such records. All dimensions shall be verified by the CONTRACTOR.

L2. Products

2.1 Water for Cleaning

The CONTRACTOR will obtain and pay for all water required for cleaning operations from metered hydrants from the local water utility, The Springfield Utility Board (SUB). The CONTRACTOR shall provide all hoses, adapters, and appurtenances required for obtaining water from the designated hydrants. Access to the hydrants shall not be obstructed in case of fire in the area served by the hydrant.

2.2 Cleaning Equipment

A. General

The CONTRACTOR shall furnish and utilize a combination of high velocity hydraulic cleaning equipment and a vacuum unit as specified or required. High velocity cleaning equipment shall be used to clean all sewer mainlines unless otherwise specified or approved by the ENGINEER. Low velocity or mechanical cleaning equipment shall not be used in lieu of high velocity equipment.

B. High Velocity Cleaning Equipment with Vacuum Pickup of Materials

1. High velocity cleaning equipment shall be capable of providing up to 200 gallons per minute at 2,000 pounds per square inch (psi) of working pressure. CONTRACTOR shall provide a minimum of 500 feet of 1-inch ID high-pressure hose with at least two (2) cleaning nozzles. The nozzles shall be capable of producing a scouring action from 15 to 45 degrees in all size lines designated to be cleaned. The equipment shall also include a high velocity "gun" for cleaning manhole walls and bottoms. The equipment shall be complete including 1,200 gallon water tanks suitable for holding corrosive or caustic chemicals, pumps, hose, hydraulically driven hose reel, auxiliary engines, controls, and all safety features required by law.

2. The cleaning equipment shall have an integral vacuum unit to allow the material cleaned from the pipes to be vacuumed directly from the manhole.

3. CONTRACTOR shall provide additional cleaning equipment, including root cutters, as required to satisfactorily clean the pipe.

2.3 TV Inspection Equipment

A. A closed circuit color television (CCTV) camera capable of providing still pictures and videos shall be used on all lines. The CCTV equipment shall be specifically designed for sewer inspection operations and shall be operative in 100 percent humidity conditions. Lighting and camera quality shall be suitable to allow a clear focused picture a minimum of six (6) linear feet in front of the camera of the entire inside periphery of the pipe. The camera shall have an adjustable focus distance from six inches to infinity, and the camera lights shall be variable intensity, with light, focus, and aperture remotely controlled by the operating technician at the monitoring station.

B. Camera travel speed shall be from 1.8 to 30 feet per minute (fpm) with smooth, uniform motion. Sudden stops and starts will not be acceptable. Camera shall be capable of stopping and reversing direction as necessary to document sewer conditions. Video

pictures shall be clear, sharp, and free from vibratory or electrical interference when the camera is in operation.

C. A CCTV camera with pan-tilt capabilities shall be used on all lines larger than six-inches in diameter. The CCTV camera shall be a tractor-powered camera able to inspect dead end lines, and shall be remotely controlled by an operating technician.

D. The monitoring station shall be truck-mounted, capable of seating two viewing personnel and one operating technician. The monitoring station shall be fully enclosed within a rigid weatherproof enclosure on the TV truck.

E. A minimum of two color display monitors (minimum 650 lines horizontal resolution) operating simultaneously shall be used in the monitoring station. The monitors shall be of a proper size to allow all viewing personnel in the monitoring station a satisfactory view, and shall continuously display the current date, manhole designation of the mainline being inspected, and a continuous forward and reverse read-out of the camera distance from the manhole of reference.

L3. Execution

3.1 Temporary Traffic Control

See Section 202: City of Springfield, Oregon "Standard Construction Specifications"

3.2 Maintaining Sewer Flows and Cleaning Precautions

A. All sanitary sewer system components shall remain in service through the cleaning and TV inspection operations unless specific exceptions are approved in writing by the ENGINEER.

B. During cleaning operations, precautions shall be taken by the CONTRACTOR in the use of cleaning equipment. When hydraulically propelled cleaning tools which retard the flows in the sewer lines are used, precautions shall be taken to insure that the water pressure created does not damage or cause flooding of public or private property being served by the sewer. Precautions shall be taken to protect the sewer lines and manholes from damage that may result from the improper use of cleaning equipment. The CONTRACTOR shall be solely responsible for the repair of any damage to structurally sound lines or damage to properties connected to the sewer which results from the cleaning operations.

C. The methods used to maintain flows shall be at the CONTRACTOR'S option and may include use of flow-through plugs with periodic release of sewage flow or bypass pumping. The bypass system, if used, shall be capable of conveying flows when the sewers are flowing full.

3.3 Cleaning

A. Clean all sewer lines and manholes designated on the drawings or directed by the ENGINEER prior to CCTV inspection including the manholes at both ends of the section to be inspected. Equipment as specified shall be used for cleaning.

B. All dirt, sand, grease, rocks, roots, or other accumulations shall be removed from pipe walls and manholes. Existing lines shall be protected from damage caused by cleaning

operations. Hydraulic cleaning operations shall be conducted with care to avoid damage to pipes and manholes, or flooding of adjacent property.

C. All sewers shall be cleaned with high velocity equipment unless the ENGINEER allows otherwise. The ENGINEER may order the use of other methods or equipment when it appears necessary.

D. All materials removed from the pipes during the cleaning operations shall be collected by a vacuum unit from the manhole downstream of the section being cleaned and removed by the CONTRACTOR. Passing accumulated materials from manhole section to manhole section shall not be permitted.

E. The CONTRACTOR shall be responsible for the proper and legal disposal of all materials removed from the sewers and in a manner acceptable to the ENGINEER.

F. Manhole and sewer cleaning reports shall be submitted on forms matching or similar to the format of the cleaning report forms included at the end of this section. All reports shall be completely filled out and provide all essential data, including:

1. Location of mainline segment or manhole being cleaned (street name and manhole designation as shown on the drawings);

2. Diameter of sewers in inches;

3. Estimated amount and type of material removed from pipe or manhole.

G. Two (2) copies of the typed Mainline Cleaning Report forms shall be furnished to the ENGINEER as specified below.

H. Acceptance of the cleaning work will not be made until after the submittal of the cleaning reports and the CCTV inspection reports and tapes. Lines will be considered acceptably clean when sufficient material has been removed to restore the sewer line to 95 percent of its original flow capacity.

3.4 Sewage Flow Controls

A. The methods used to maintain flow shall be at the CONTRACTOR'S option and may include the use of flow-through plugs or bypass pumping.

B. During periods of very high flows when lines flow greater than half full, the CONTRACTOR, with the ENGINEER'S approval, shall suspend sewer cleaning operations until flows are again less than half full.

C. Depths of flow at the downstream manhole during television inspection shall not exceed those shown below when performing television inspection of the lines.

Pipe Diameter (inches)	**Maximum Flow Depth % of Pipe Diameter**
6 – 10	20
12 – 24	25
30 - 42	30
48 - 72	35

D. When the sewage depth of flow at the downstream manhole of the mainline section being inspected is above the maximum allowable for television inspection, the CONTRACTOR shall provide flow-through plugs or other means where necessary to ensure that the flows are reduced to the levels specified above.

3.5 CCTV Inspection

A. Internal CCTV inspection of sanitary sewer mainlines as shown on the drawings shall be performed only after the sewers have been thoroughly cleaned so that service connections, cracks, leaks and structural failures may be located.

B. The CCTV inspection shall be performed on one mainline section at a time and between two manholes. Each mainline section being inspected shall be isolated from the remainder of the line as necessary by the use of line plugs or bypass pumping to insure viewing of the inside periphery of the pipe. The TV inspection shall be performed by moving the television camera through the line along the axis of the pipe. The inspection shall be performed in a forward and/or backward direction, according to line conditions at the time the inspection is made.

C. The pan-tilt camera shall be turned to view directly up the axis of each service lateral encountered.

D. During the CCTV inspections, a record shall be kept which clearly shows the exact location in relation to the centerline of the adjacent manhole of each service connection, crack, leak or structural fault discovered. To insure accurate measurement, the measurement shall be made at or above ground level by means of a meter device. Marking on a cable or the like which would require interpolation for the depth of the manholes shall not be used. Accuracy of the distance meter shall be checked by use of a walking meter, measuring wheel, or other suitable device, and the accuracy shall be satisfactory to the ENGINEER.

E. The TV inspection record shall be submitted on forms matching or similar to the format of the report forms included at the end of this section. All reports shall be completely filled out and provide all essential data, including:

1. Location of mainline segment being tested (street name and designation as shown on the drawings);

2. Pipe diameter in inches;

3. Type and condition of the pipe;

4. Length and type of joints;

5. Presence and location of roots or visible leaks;

6. Location and description of any cracks, breaks, misalignments, or obstructions;

7. Location and diameter of service laterals, including clock position as viewed from the camera;

8. Condition of the portion of lateral visible from pan-tilt camera;

9. Estimates of flows from service pipes and estimates of whether flow is domestic or I/I.

F. Two (2) copies of the printed Television Inspection Report form shall be furnished to the ENGINEER.

G. All video inspections shall be recorded on digital video disc (DVD) together with voice transmissions of sewer conditions. The video records shall be accurately referenced to the corresponding inspection report and shall be organized and catalogued so that specific faults can easily be located on the DVD-ROM. Two (2) DVDs shall be furnished to the ENGINEER.

H. The DVD shall be created in a format compatible with the majority of DVD players sold in the past five years. DVDs and inspection runs shall be numbered sequentially. Each DVD shall have a label which lists the date, the DVD number, and all runs (including run number and mainline segment) included on the disk. The DVDs shall become the property of the OWNER upon payment for the line segments inspected.

3.6 Manhole Inspection Reports

Manholes at each end of any sewer section that is TV inspected shall be inspected. The manhole inspection reports shall be completed and submitted on forms matching or similar to the format of the report forms included at the end of this section. Two (2) copies of the printed Manhole Inspection Report form shall be furnished to the ENGINEER.

3.7 Report Submittals

All cleaning and TV inspection and manhole inspection reports shall be typed and organized by manhole numbers and submitted in 3-ring binders along with the DVDs.

MAINLINE CLEANING REPORT

Date:	Client: City:			Basin No.
Technician:	Unit #:	Weather:	Cleaned By:	Report No.

Method of Measurement: ☐ Scaled from map ☐ TV Report ☐ Measured by Tape ☐ Approximated	# TANKS / Hours	FOOTAGE / Diameter (in)	GALLONS REMOVED & TYPE OF DEBRIS / Line Completion Status
1. MH #_____TO MH #_____. Location:_____.			
Comments:			Line Complete? (Yes / No)
2. MH #_____TO MH #_____. Location:_____.			
Comments			Line Complete? (Yes / No)
3. MH #_____TO MH #_____. Location:_____.			
Comments			Line Complete? (Yes / No)
4. MH #_____TO MH #_____. Location:_____.			
Comments			Line Complete? (Yes / No)
5. MH #_____TO MH #_____. Location:_____.			
Comments			Line Complete? (Yes / No)
6. MH #_____TO MH #_____. Location:_____.			
Comments			Line Complete? (Yes / No)
7. MH #_____TO MH #_____. Location:_____.			
Comments			Line Complete? (Yes / No)
8. MH #_____TO MH #_____. Location:_____.			
Comments			Line Complete? (Yes / No)
Type of Debris: S = Sand; R = Rock; G = Grease; B = Broken Pipe; RT = Roots		**Total Line Footage Complete This Date** SIZE (in)	FOOTAGE
Notes:			

TELEVISION INSPECTION REPORT

Date:	Client: City:					Basin No.	
Technician:	Inspector:		Weather:	Cleaned By:		Report No.	Tape No.
From MH #: Street:	Pipe Dia (in):	Joint Length (ft):	Section Length (ft):	Joint Type:	Pipe Mat'l:	To MH #: Street:	

PIPELINE DATA:	Footage	Problem Code	Comments	I/I (gpm)
Cleanliness: _____				
Alignment: _____				
Grade: _____				
Age: _____				
% Leaking Joints _____ (Estimated)				
Other: _____				
_____				
_____				
_____				
MANHOLE DATA: (See attached Manhole Inspection Report)				
TURNAROUND:				
Requested (Date/Time):				
_____				
Authorized (Date/Time):				
_____				

MANHOLE INSPECTION REPORT

Date:	Client: City:		Basin No.
Technician:	Weather:	Cleaned By:	Report No.
MH #:	MH Location (street and nearest cross-street, or address):		

SURFACE COVER:

Cover: AC ____ Concrete ____ Gravel ____ Dirt ____ Other (specify) _____

Ability to access MH: Satisfactory ____ Poor ____

CONDITION:

Deterioration:
Light _____
Medium _____
Heavy _____

Condition of Rim:
Satisfactory _____
Poor _____

TRAFFIC:

Light _____
Medium _____
Heavy _____

MATERIALS OF CONSTRUCTION:

Number of holes in lid: _____

Manhole Type: Flat-top ___ Cone ___

Cone _____ Precast ___Brick ___ Block ____ CIP ___

Wall _____ Precast ___Brick ___ Block ____ CIP ___

Base _____ Precast ___Brick ___ Block ____ CIP ___

HYDRAULIC CONDITIONS:

Location	Est'd I/I (gpm)
Cover	_____
Ring	_____
Riser	_____
Cone	_____
Wall	_____
Bench	_____
Pipe Collar	_____

INLETS AND OUTLET:

Line	Dia	Depth from rim
Outlet	_____	____ ft ____ in
Inlets:		
A	_____	____ ft ____ in
B	_____	____ ft ____ in
C	_____	____ ft ____ in
D	_____	____ ft ____ in

FLOW & LEAKS:

Flow Depth (in) _____

Leaks?
Yes _____
No _____

Leak locations = X

RIM LOCATION :

Rim Height: _____ at grade

_____ below grade by _____ inches

_____ above grade by _____ inches

END OF SECTION

SPECIAL PROVISIONS

SECTION M – Sewage Diversion and Bypass Pumping

P21080 Franklin/McVay Sanitary Sewer Extension

M1. General

1.1 Description

This Section includes the work necessary for sewage diversion and bypass pumping as needed for construction on existing active sewage facilities and where existing facilities are temporarily removed to accommodate construction activities.

1.2 Requirements

A. The CONTRACTOR shall submit a "Sewage Diversion and Bypass Pumping Plan" to the ENGINEER prior to the start of construction. Under no circumstances shall sewage be allowed to flow or leak onto the ground surface, into gutters or onto streets, over sidewalks, or into storm inlets. All diverted sewage shall be discharged back to the existing sanitary sewer system, or to the proposed sanitary sewer system if it has been constructed, tested and connected to the existing downstream sewer system. The Sewage Diversion and Bypass Pumping Plan shall outline the CONTRACTOR's proposed method of handling all sewage flow during all elements of construction. The plan shall show all flow inputs (connections) in the work area and how the flow from each connection will be managed. Flow inputs shall be confirmed by the CONTRACTOR during initial field surveys and television inspections. The CONTRACTOR shall provide complete diversion regardless of flow rate. Additionally the plan shall contain, at a minimum, a plan view of each proposed diversion on a site map and the individual components of the diversion including but not limited to:

1. Pumps: type, size and placement
2. Diversion pipe: size, type, and placement
3. Power supply to pumps
4. Method of damming the flow
5. Facilities for redundancy

B. When necessary to provide for the construction on an existing sewer system, the flow shall be diverted by the use of pumps to a manhole downstream of the construction. The CONTRACTOR shall have adequate pumps and piping or alternative methods to divert flow to the downstream sewer lines. The pumping or transportation capacity shall be sufficient to maintain normal sewage flows plus additional flows that may occur during a rainstorm.

C. Sewage diversion piping shall be buried or arranged such that the piping is protected from traffic loads, traffic is maintained at driveways and roadways, and sidewalks are free of obstruction unless otherwise approved by the ENGINEER. All sewage diversion piping shall be water-tight. Surface restoration that is required for installing sewage diversion piping and other appurtenances is considered incidental.

D. The CONTRACTOR shall use critically silenced generators and pump units with hospital-grade mufflers and shall meet or exceed the requirements of any local noise ordinances. Such approved generators and accompanying pumps shall be continuously monitored while in operation and shall be placed to minimize disturbances to residential areas. If necessary to meet noise ordinances, sound baffles and temporary sound walls shall be installed to deflect sound from generators and bypass-pumps away from residential areas or as directed by the ENGINEER. No variance from any local noise ordinances will be allowed unless the CONTRACTOR secures a noise variance at no additional expense to the OWNER.

E. Diversion of all sewage flow shall be maintained at all times. The CONTRACTOR shall provide a qualified operator who is capable of making emergency repairs or who is able to mobilize forces to handle power, pump or other problems. This operator shall be on site immediately near the pumping system at all times. The CONTRACTOR shall be responsible for continuity of sewer service to each facility connected to the section of the sewer being impacted during the execution of the work. Diversion pumping equipment and piping shall be tested for leaks prior to pumping sewage. Leak testing shall be performed any time the diversion pumping system is disassembled, reassembled and/or modified. No leaks in the diversion piping shall be permitted. Only potable water shall be used for leak testing of pipes. Diversion pipes shall be cleaned and disinfected prior to disassembly and the liquid shall be discharged into an existing sanitary sewer. Service connections or laterals shall not be disconnected or plugged overnight. Service must be restored to service connections or laterals within the normal work day.

F. Each sewage diversion pump shall be powered by a dedicated power generator and shall operate as a single pumping unit. For system redundancy, the CONTRACTOR shall have on site an equivalent back-up sewage pumping unit for each pumping operation.

G. Flow diversion piping and pumps shall be free of leaks. Leaking pipes and pumps shall be replaced immediately. Sewage spills shall be cleaned up immediately. If a sewage release occurs during any sewage diversion activity, the CONTRACTOR shall be responsible for taking immediate action to cease, contain, and clean up the release, and to notify the proper authorities. The CONTRACTOR shall have sufficient equipment and materials at the work site to cease, contain and cleanup any sewage release that occurs during diversion operations and will be responsible for all costs associated with sewage spill cleanup including associated fines. The CONTRACTOR shall be responsible for cleanup, repair, property damage costs and claims.

H. No sewage diversion operations may proceed unless the CONTRACTOR has, at the work site, the following items:

1. Dry granular lime, of sufficient quantities, to be spread on any release for purposes of disinfectant. A 10% bleach solution may also be used as a disinfectant. Disinfectants may not be directly applied to any surface waters, streams, creeks, etc.

2. Equipment to secure the area of sewage release and isolate the public from accessing the release site. As a minimum this shall include barricades and caution tape.

3. The equipment and materials on hand to stop the release and repair the failed item.

4. Equipment and materials to clean the site, rake up solid debris and to dispose of material properly.

I. In case of sewage release during diversion operations, the CONTRACTOR shall immediately contact the following authorities notifying them of the release:

1. City of Springfield or MSA (541-741-2975) On-Site Project Inspector

2. If the Project Inspector is not capable of being immediately notified, then contact the City of Springfield Collection System Compliance Officer or their Designee. Those individuals are:

   a) City Inspector - Denny Wright – Phone: 541-736-1010
   b) Collection System Compliance Officer – Brian Conlon – Phone: 541-726-3753
   c) Designee – Mike Risley – Phone: 541-726-3615

The representative of the City of Springfield shall report the sewage spill within 24 hours to the Oregon Department of Environmental Quality and any other appropriate entities. Even if a sewage spill or release is contained within an excavation, the spill or release must be reported.

The Contractor also agrees to liquidated damages in the amount of $500.00 per incident for failure to report sewage spills plus an amount sufficient to reimburse the City for any civil and administrative penalties paid by the City as a result of the Contractor's failure to report. Failure to report sewage spills may subject the City to (1) civil penalties of up to $32,500.00 per day of violation pursuant to Section 309(d) of the Clean Water Act, 33 U.S.C. § 1319(d); (2) administrative penalties of up to $11,000.00 per day for each violation, pursuant to Section 309(g) of the Clean Water Act, 33 U.S.C. § 1319(g); or (3) civil action in federal court for injunctive relief pursuant to Section 309(b) of the Clean Water Act, 33 U.S.C. § 1319(b).

J. The CONTRACTOR shall be responsible for providing the following information to the authorities in case of a spill or release:

1. Release location
2. Date and time release found or started and time stopped
3. Release flow rate and estimated total volume
4. Receiving stream, if any
5. Action taken to stop release
6. Cause of release
7. Clean-up actions taken
8. Any other information as requested by relevant authorities

K. Upon completion of construction, all flow diversion piping and pumps and related facilities shall be removed and all affected areas restored to their prior condition.

END OF SECTION

SPECIAL PROVISIONS

SECTION N - Pumps, General

P21080 Franklin/McVay Sanitary Sewer Extension

N1. General

1.1 Description

A. The provisions of this Section shall apply to all pumps and pumping equipment except where otherwise indicated.

B. Where two or more pump systems of the same type or size are required, the pumps shall all be produced by the same manufacturer.

C. CONTRACTOR shall provide all labor, equipment and materials and perform all operations in connection with the installation and testing of pumps. This work shall also include all assistance for installation, start-up and testing services to be provided by the Pump Supplier.

D. All work performed under this section shall be in accordance with all approved trade practices and manufacturer's recommendations.

1.2 Submittals

A. Submittals shall be furnished in accordance with Special Provisions, Section D -Submittals.

B. Shop Drawings shall contain the following information:

1. Pump name, identification number and specification Section number.

2. Performance data curves showing head, capacity, horsepower demand, NPSH required and pump efficiency over the entire operating range of the pump. The pump manufacturer shall indicate separately the head, capacity, horsepower demand, overall efficiency and minimum submergence required at the design flow conditions and the maximum and minimum flow conditions. A family of performance curves at intervals of 100 rpm from minimum speed to maximum speed shall be provided for each centrifugal pump equipped with a variable speed drive, and a curve for each speed on two-speed pumps.

3. The limits on the performance curves recommended for stable operation without surge, cavitation or excessive vibration.

4. Assembly and installation drawings including shaft size, seal, coupling, bearings, anchor bolt plan, part nomenclature, material list, outline dimensions, and shipping weights.

C. Complete motor nameplate data as defined by NEMA, motor manufacturer and any motor modifications.

D. Operation and Maintenance Manual containing the required information for each pump section.

E. A spare parts list containing the required information for each pump section.

F. Signed, dated and certified factory test data for each pump system which requires factory testing submitted before shipment of equipment.

G. Certifications

1. Manufacturer's written certification of proper installation
2. CONTRACTOR's written certification of satisfactory field testing

1.3 Quality Assurance

A. The CONTRACTOR shall demonstrate that all pump equipment meets the specified performance requirements. CONTRACTOR shall provide the services of an experienced, competent and authorized service representative of the manufacturer, who shall visit the project site to perform the following tasks.

1. Assist the CONTRACTOR in the installation of the pump equipment.

2. Inspect, check, adjust if necessary and approve the pump equipment installation.

3. Start-up and field-test the pump equipment for proper operation, efficiency and capacity.

4. Perform necessary field adjustments during the test period until the pump equipment installation and operation are satisfactory to the ENGINEER.

5. Instruct the OWNER's personnel in the operation and maintenance of the pump equipment. Instruction shall include step-by-step trouble shooting procedures for pump equipment.

B. The costs of all inspection, startup, testing, adjustment and instruction work performed by said factory-trained representatives shall be borne by the CONTRACTOR. When available, the OWNER's operating personnel will provide assistance in the field testing.

N2. Products

2.1 General

A. Materials and equipment shall be standard products of a manufacturer and distributor regularly engaged in the manufacture and distribution of such products for at least two (2) years and shall be suitable for the service intended (pumping of unscreened, raw sewage). All materials and equipment shall be new and unused except for the testing specified herein.

B. Compliance with the requirements of the individual pump sections may necessitate modifications to the manufacturer's standard equipment.

C. All centrifugal pumps shall have a continuously rising performance curve. In no case shall the required horsepower at any point on the performance curve exceed the rated horsepower of the motor or encroach on the service factor.

D. All components of each pump system provided under the pump sections shall be entirely compatible. Each unit of pumping equipment shall incorporate all basic mechanisms, couplings, electric motors or engine drives, variable speed controls, necessary mountings and appurtenances.

E. The pumps shall be supplied by a distributor authorized to service them throughout the warranty period and beyond. The distributor shall be located within a 100-mile radius of the site.

F. The pumps shall be warranted by the manufacturer for a minimum of two (2) years from the date of final acceptance.

2.2 Materials

A. All materials shall be suitable for the intended application; materials not specified shall be high-grade, standard commercial quality, free from all defects and imperfection that might affect the serviceability of the product for the purpose for which it is intended, and shall conform to the following requirements:

1. Cast iron pump casings and bowls shall be of close-grained gray cast iron, conforming to ASTM A48 - Gray Iron Casings, Class 30, or equal.

2. Stainless steel pump shafts shall be Type 416 or 316. Miscellaneous stainless steel shall be of Type 316, except in a septic environment.

3. All anchor bolts, washers, and nuts shall be Type 316 stainless steel.

2.3 Pump Components, General

A. Flanges -- Suction and discharge flanges shall conform to ANSI/ASME B16.1 - Cast Iron Pipe Flanges and Flanged Fittings, Class 12, 125, 250, and 800 or B16.5 - Flanges and Flanged Fittings dimensions.

B. Handholes -- Handholes on pump casings shall be shaped to follow the contours of the casing to avoid any obstructions in the water passage.

2.4 Pump Appurtenances

A. Nameplates -- Each pump shall be equipped with a stainless steel nameplate indicating serial numbers, rated head and flow, impeller size, pump speed and Manufacturer's name and model number.

2.5 Factory Testing

The following tests shall be conducted on each indicated pump system:

A. Pump Systems -- All centrifugal pump systems shall be tested at the pump factory in accordance with the American National Standard for Centrifugal Pump Tests (ANSI/HI 1.6), the American National Standard for Vertical Pump Tests (ANSI/HI 2.6), or the American

National Standard for Submersible Pump Tests (ANSI/HI 11.6) as approved by ANSI and published by the Hydraulic Institute. Tests shall be performed using the complete pump system to be furnished, including the motor. The following minimum test data shall be submitted:

1. Hydrostatic test data.

2. Performance test data, including a minimum of five hydraulic test readings between shutoff head and 25 percent beyond the maximum indicated capacity, recorded on data sheets as defined by the Hydraulic Institute.

3. Certified pump curves showing head, flow, efficiency and brake horsepower requirements.

4. Submersible motor integrity test data.

5. Vibration test data.

B. Acceptance -- In the event of failure of any pump to meet any of the requirements, the pump manufacturer shall make all necessary modifications, repairs or replacements to conform to the requirements of the Contract Documents and the pump shall be retested at no additional cost to the OWNER until found satisfactory.

2.6 Pump Supports and Foundations

A. All pump equipment supports, anchors and restraint shall be adequately designed for static, dynamic, and seismic loads. The design horizontal seismic force shall be as required by the governing building code (10 percent of gravity minimum).

B. Pump foundations shall be as per manufacturer's written recommendations. All pumps shall be mounted as shown on the manufacturer's standard details, unless otherwise shown or specified.

C. Shop drawings submitted to the ENGINEER for review in accordance with the requirements of Special Provisions Section D – Submittals, and shall include calculations showing equipment anchorage forces and the capacities of the anchorage elements to be provided by the CONTRACTOR. For equipment weighing more than 200 pounds, the calculations shall be stamped by a Professional Engineer registered in the State of Oregon. Said submittals, by virtue of the fact that they bear the stamp of a registered engineer, shall be reviewed for general consistency with the requirements shown in the Contract Documents, but not for context, accuracy, or method of calculation.

N3. Execution

3.1. Services of Manufacturer

A. An authorized service representative of the manufacturer shall visit the project site to witness the following and to certify in writing that the equipment and controls have been properly installed, aligned, lubricated, adjusted and readied for operation:

1. Installation of the equipment
2. Inspection, checking and adjusting the equipment

3. Startup and field testing for proper operation
4. Performing field adjustments to ensure that the equipment installation and operation comply with requirements

B. Instruction of the OWNER's Personnel

1. An authorized training representative of the manufacturer shall visit the project site to instruct the OWNER's personnel in the operation and maintenance of the equipment, including step-by-step troubleshooting with necessary test equipment. Instruction shall be specific to the models of equipment provided.

2. The representative shall have at least two year's experience in training.

3. Training shall be scheduled a minimum of three weeks in advance of the first session.

4. Proposed training material and a detailed outline of each lesson shall be submitted for review. Comments shall be incorporated into the material.

5. The training materials shall remain with the trainees.

6. The OWNER may videotape the training for later use with the OWNER's personnel.

3.2 Installation

A. General -- Install and align pumps and fittings in accordance with the manufacturer's printed specifications and at the locations as shown on the Plans. Furnish and install anchor bolts recommended by the manufacturer. Place the pumps using equipment templates.

B. Anchors for the unit shall be set in concrete, and the unit shall be mounted as instructed by the manufacturer. Anchors shall be drilled and set with epoxy. CONTRACTOR shall provide ENGINEER 24 hours notice prior to installing base elbows, to allow for anchor bolt inspection. The manufacturer shall supervise installation to ensure that the unit is properly aligned and leveled, that all electrical and piping connections are properly made and that lubricants have been provided and installed.

C. Alignment -- All equipment shall be field tested to verify proper alignment, operation as specified and freedom from binding, scraping, vibration, shaft runout or other defects. Pump drive shafts shall be measured just prior to assembly to ensure correct alignment without forcing. Equipment shall be secure in position and neat in appearance.

D. Lubricants -- The CONTRACTOR shall provide the necessary oil and grease for initial operation.

3.3 Field Tests

A. Each pump system shall be field tested after installation to demonstrate satisfactory operation without excessive noise, vibration, and cavitation or overheating of bearings.

B. The following field testing shall be conducted:

1. Startup, check and operate the pump system over its entire speed range. Where vibration analysis and measurement is required, it shall be within the amplitude limits

specified and recommended by the Hydraulic Institute Standards at a minimum of four pumping conditions defined by the ENGINEER.

2. Obtain concurrent readings of motor voltage, amperage, pump suction head and pump discharge head for at least four pumping conditions at each pump rotational speed, including shut-off head. Check each power lead to the motor for proper current balance. Obtain discharge pressure gauge readings and flow meter readings for each pumping condition. Record field test readings on DEQ-approved form furnished by the ENGINEER. Acceptance testing shall include a comparison of measurements obtained following installation with the manufacturer's factory test data. Any discrepancy shall be resolved to the satisfaction of the ENGINEER prior to acceptance by the OWNER.

3. Submersible Pump Lift Test - Lift each submersible pump above the access hatch and then lower the pump back down onto the discharge elbow to demonstrate adequate clearances, smooth operation of the guide rail system, and proper re-seating of the pump on the discharge elbow.

4. Electrical and instrumentation tests shall conform to the requirements of the Section under which that equipment is specified.

C. Field testing will be witnessed by the ENGINEER. The CONTRACTOR shall furnish three days advance notice of field testing.

D. In the event any pumping system fails to meet the test requirements, it shall be modified and retested as above until it satisfies the requirements.

E. After each pumping system has satisfied the requirements, the CONTRACTOR shall certify in writing that it has been satisfactorily tested and that all final adjustments have been made. Certification shall include the date of the field tests, a listing of all persons present during the tests and the test data.

F. The CONTRACTOR shall bear all costs of field tests, including related services of the manufacturer's representative. If available, the OWNER's operating personnel will provide assistance in field testing.

END OF SECTION

SPECIAL PROVISIONS

SECTION O – Submersible Sewage Pumps

P21080 Franklin/McVay Sanitary Sewer Extension

O1. General

1.1 Description

Work covered in this Section includes furnishing, start-up, testing, and operation training for submersible sewage pumps as required for this project. Specified appurtenances, such as rails, brackets, discharge elbows, and control/power cables shall also be included. Like items of equipment specified herein shall be the end product of one manufacturer. Electrical controls and motor design requirements are specified in this section and the electrical section of these specifications. The CONTRACTOR shall be responsible for coordinating the pump requirements with the pump drive manufacturer and shall be responsible for the overall pump and drive performance.

1.2 Submittals

A. Submittals during construction shall be made in accordance with Special Provisions, Section D - Submittals, and Special Provisions, Section N - Pumps, General.

B. Submittals for Record - The pump supplier shall submit a manufacturer's installation and operation certificate and a statement that the equipment is suitable for the intended use.

1.3 Reference Specifications, Codes and Standards

Pumps shall meet the requirements of Special Provisions, Section N - Pumps, General; and the latest version of the Hydraulic Institute Standards for Centrifugal Pumps, except where modified herein.

1.4 Factory Testing

Pump manufacturer shall provide the following factory tests in accordance with Special Provisions, N - Pumps, General: performance test, hydrostatic test, submersible motor integrity test and vibration test. All test results shall be certified to be acceptable per the testing standards, and shall be submitted to and approved by ENGINEER prior to shipment of equipment.

O2. Products

2.1 Description

A. Identification:

Location	Nugget Way Pump Station
Pump Label(s)	P-1, P-2
Quantity	2

B. Power and Motor Requirements:

Voltage	208
Phase	3
Frequency	60 Hz
Motor Speed	1,800 rpm
Motor Horsepower	5

C. Performance Requirements at Full Pump Speed, One Pump Running:

Duty Point 1 Minimum Flow Capacity	600 gpm
Duty Point 1 Total Dynamic Head	18 feet
Duty Point 1 Minimum Pump Efficiency	65%
Maximum NPSH required at Duty Point 2	13 feet

D. Operating Conditions:

Duty	Continuous
Drive	Variable Speed
Ambient Environment	Wet Well - Corrosive
Ambient Temperature	33° - 104° F
Fluid Service	Municipal wastewater, raw and unscreened, containing rags, grit, fats, oil, and debris.
Minimum Solids Passing Capability	Flygt N-Impeller
Fluid Temperature	50° - 90° F
Fluid pH Range	6.0 to 8.0
Fluid Specific Gravity	1.0
Net Positive Suction Head Available	26 feet

Pumping System Dimensions:

Minimum Pump Discharge Size	4-inch
Base Elbow Discharge Size	4-inch
Discharge Flange Rating (ANSI)	Class 125
Minimum Submersible Cable Length	As Required

F. Other Requirements

1. The head-capacity curve shall exhibit a uniformly rising characteristic from free discharge to shutoff. The pump motor shall be non-overloading throughout the entire pump curve.

2. The entire pump assembly shall be U.L. approved as Explosion Proof for operation in a Class 1, Division 1, Group D hazardous location.

2.2 Pump Construction

A. General - The pump shall be heavy-duty vertical, submersible with integral drive motor, single suction, centrifugal, sewage type, suitable for a permanent-type wet well installation.

B. Pump - Major pump components shall be of gray cast iron, ASTM A-48, Class 35B, with smooth surfaces devoid of blow holes or other casting irregularities. All exposed nuts or bolts shall be AISI type 304 stainless steel. All metal surfaces coming into contact with the pumped media, other than stainless steel, shall be protected by a factory applied spray coating of acrylic dispersion zinc phosphate primer with a polyester resin paint finish on the exterior of the pump.

C. Impeller - The impeller shall be of Hard-Iron™ (ASTM A-532 (Alloy III A) 25% chrome cast iron), dynamically balanced, semi-open, multi-vane, back swept, screw-shaped, non-clog design. The impeller leading edges shall be mechanically self-cleaned automatically upon each rotation as they pass across a spiral groove located on the volute suction. The screw-shaped leading edges of the gray iron impeller shall be hardened to Rc 60 and shall be capable of handling solids, fibrous materials, heavy sludge and other matter normally found in wastewater. The screw shape of the impeller inlet shall provide an inducing effect for the handling of up to 5% sludge and rag-laden wastewater. The impeller to volute clearance shall be readily adjustable by the means of a single trim screw. The impeller shall be locked to the shaft, held by an impeller bolt and shall be coated with alkyd resin primer.

D. Volute - The pump volute shall be a single piece gray cast iron, ASTM A-48, Class 35B, non-concentric design with smooth passages of sufficient size to pass any solids that may enter the impeller. Minimum inlet and discharge size shall be as specified. The volute shall have a replaceable suction cover insert ring in which are cast spiral-shaped, sharp-edged groove(s). The spiral groove(s) shall provide trash release pathways and sharp edge(s) across which each impeller vane leading edge shall cross during rotation so to remain unobstructed. The insert ring shall be cast of Hard-Iron™ (ASTM A-532 (Alloy III A) 25% chrome cast iron) and provide effective sealing between the multi-vane semi-open impeller and the volute housing.

E. Shaft - Pump and motor shaft shall be a solid continuous shaft. The pump shaft shall be an extension of the motor shaft. Couplings will not be acceptable. The pump shaft shall be stainless steel ASTM A479 S43100-T. The shaft shall be adequately designed to endure alternating bending stresses and to provide for minimum overhang to reduce shaft deflection and prolong bearing life.

F. Bearings - The pump shaft shall rotate on two bearings. Motor bearings shall be permanently grease lubricated. The upper bearing shall be a single deep groove ball bearing. The lower bearing shall be a two row angular contact bearing to compensate for axial thrust and radial forces. Single row lower bearings are not acceptable.

G. Mechanical Seal - Each pump shall be provided with a tandem mechanical shaft seal system consisting of two totally independent seal assemblies. The seals shall operate in a lubricant reservoir that hydro-dynamically lubricates the lapped seal faces at a constant rate. The lower, primary seal unit, located between the pump and the lubricant chamber, shall contain one stationary and one positively driven rotating, corrosion resistant tungsten-carbide ring. The upper, secondary seal unit, located between the lubricant chamber and the motor housing, shall contain one stationary and one positively driven rotating, corrosion resistant tungsten-carbide seal ring. Each seal interface shall be held in contact by its own spring system. The seals shall require neither maintenance nor adjustment nor depend on direction of rotation for sealing. The position of both mechanical seals shall depend on the shaft. Mounting of the lower mechanical seal on the impeller hub will not be acceptable. For special applications, other seal face materials shall be available.

H. Seal lubricant shall be FDA Approved, nontoxic.. The motor shall be able to operate continuously while non-submerged without damage while pumping under load. Seal lubricant shall be FDA approved and nontoxic.

Pump Discharge Elbow - The pump discharge connection shall be the elbow type. The discharge connection shall be bolted to the structure as recommended by the manufacturer and shall serve as a lower attachment for the guide rails, and as anchorage for the pump. The anchorage system shall be designed to transmit all forces safely to the structure, and may incorporate intermediate supports as required. Calculations and supporting documentation justifying the support design may be requested, and shall be provided with the submittals required under Special Provisions, Section D - Submittals.

The design shall be non-sparking and shall conform to UL requirements for installation in a Class 1, Division 1, Group D hazardous location. When in place, the discharge connection shall cause a watertight seal between the pump and the discharge elbow, accomplished by a machined metal to metal contact only, using simple linear downward motion of the pump with the entire weight of the pumping unit guided to and pressing tightly against the discharge connections. Sealing of the discharge interface with a diaphragm, O-ring, or profile gasket shall not be acceptable. No portion of the pump shall bear directly on the floor of the wet well and no rotary motion of the pump shall be required for sealing.

I. Dual Rail Guide System - The pump shall be provided with a dual rail guide system to automatically and firmly connect the pump to the discharge piping when lowered into place on the discharge elbow. Once the pump has been positioned on its support fitting at the discharge elbow, the guide rail system shall not be required for pump support. The guide rail system shall allow easy removal of the pump without entering the wet well or disturbing the discharge piping. Single rail systems are not acceptable. All components of the guide system and pump anchorage shall be of stainless steel 316.

J. Lifting Device - Each pump shall be provided with Type 316 stainless steel lifting chain and shackles of adequate strength to support 150 percent of the entire pump and motor assembly weight. Minimum chain size shall be 1/2-inch.

2.3 Motors

A. General - Each pump shall be provided with a vertically mounted electric motor that conforms to the following requirements. Motors shall be designed to accept the total, unbalanced thrusts imposed by the pump. The motor and the pump shall be produced by the same manufacturer. The motor shall be capable of continuous submergence underwater without loss of watertight integrity to a depth of 65 feet or greater.

B. The pump motor shall be a NEMA B design, induction type with a squirrel cage rotor, shell type design, housed in an air filled, watertight chamber. The stator windings shall be insulated with moisture resistant Class H insulation rated for 180°C (356°F). The stator shall be insulated by the trickle impregnation method using Class H monomer-free polyester resin resulting in a winding fill factor of at least 95%. The motor shall be inverter duty rated in accordance with NEMA MG1, Part 31. The stator shall be heat-shrink fitted into the cast iron stator housing. The use of multiple step dip and bake-type stator insulation process is not acceptable. The use of bolts, pins or other fastening devices requiring penetration of the stator housing is not acceptable. The motor shall be specifically designed for submersible pump usage and designed for continuous duty pumping media of up to 40°C (104°F) with an 80°C temperature rise and capable of at

least 30 evenly spaced starts per hour. The rotor bars and short circuit rings shall be made of cast aluminum.

C. Service Factors - The combined service factor (combined effect of voltage, frequency and specific gravity) shall be a minimum of 1.15. The motor shall have a voltage tolerance of plus or minus 10%. The motor shall be designed for operation up to 40°C (104°F) ambient and with a temperature rise not to exceed 80°C. A performance chart shall be provided upon request showing curves for torque, current, power factor, input/output kW and efficiency. This chart shall also include data on starting and no-load characteristics.

D. Moisture Protection - A mechanical float switch (FLS) shall be mounted in the junction chamber to signal if there is water intrusion.

E. Power Cable - The power cable shall be sized according to the NEC and ICEA standards and shall be of sufficient length to reach the junction box without the need of any splices. The outer jacket of the cable shall be oil resistant chlorinated polyethylene rubber. The motor and cable shall be capable of continuous submergence underwater without loss of watertight integrity to a depth of 65 feet or greater.

F. Cable Entry Seal - The cable entry seal design shall preclude specific torque requirements to insure a watertight and submersible seal. The cable entry shall consist of a single cylindrical elastomer grommet, flanked by washers, all having a close tolerance fit against the cable outside diameter and the entry inside diameter and compressed by the body containing a strain relief function, separate from the function of sealing the cable. The assembly shall provide ease of changing the cable when necessary using the same entry seal. The cable entry junction chamber and motor shall be separated by a stator lead sealing gland or terminal board, which shall isolate the interior from foreign material gaining access through the pump top. Epoxies, silicones, or other secondary sealing systems shall not be considered acceptable.

2.4 Protection

A. All stators shall incorporate thermal switches in series to monitor the temperature of each phase winding. The thermal switches shall open at 125°C (260°F), stop the motor and activate an alarm.

B. A leakage sensor shall be available as an option to detect water in the stator chamber. The Float Leakage Sensor (FLS) is a small float switch used to detect the presence of water in the stator chamber. When activated, the FLS will stop the motor and send an alarm both local and/or remote. USE OF VOLTAGE SENSITIVE SOLID STATE SENSORS AND TRIP TEMPERATURE ABOVE 125°C (260°F) SHALL NOT BE ALLOWED.

C. The thermal switches and float switches shall be connected to a Mini-CAS control and status monitoring unit. The Mini-CAS shall be designed to be mounted in the pump control panel.

2.5 Pump Manufacturer

Acceptable submersible sewage pump manufacturer shall be Flygt-Xylem Water Solutions. Acceptable Model shall be Flygt NP 3102 with 158 mm impeller.

O3. Execution

3.1 Inspection

Inspect pumps and fittings before installation to verify quality of material.

3.2 Installation

A. Install and align pumps and fittings in accordance with the manufacturer's printed specifications and at the locations shown on the Plans. Use anchor bolts furnished or recommended by the manufacturer. Place the pumps using equipment templates.

B. Anchors for the unit shall be set in the concrete, and the unit shall be mounted as instructed by the manufacturer. Anchors shall be drilled and set with epoxy. CONTRACTOR shall provide ENGINEER 24 hours notice prior to installing base elbows, to allow for anchor bolt inspection. The manufacturer shall supervise installation to ensure that the unit is properly aligned and leveled; that all electrical and piping connections are properly made; and that lubricants have been provided and installed.

3.3 Inspection and Start-Up

A. The CONTRACTOR shall furnish a representative of the manufacturer to perform inspection, start-up and training services. The manufacturer's representative shall be experienced in the operation and maintenance of the equipment and shall instruct the OWNER's personnel in the operation and maintenance of the equipment, including step-by-step troubleshooting with necessary test equipment. The representative shall check the installation and supervise initial start-up of the equipment, and shall perform, at a minimum, the following tests on each pump:

- Measure and record shutoff head and power draw at shutoff head.
- Measure and record actual operating head and power draw at actual operating head.
- Measure and record operating head and power draw at two separate partially throttled flow rates.
- Measure and record static head.
- Duplicate all normal operating modes and all failure modes, including the removal and installation of pumps from the wet well using the guide rail system.

B. CONTRACTOR shall verify that the pumps are operating at the design duty condition, and shall remove and replace units that do not meet the design operating criteria.

C. The CONTRACTOR shall provide the necessary water and other materials required for the testing as defined herein and recommended by the manufacturer.

D. The manufacturer's representative shall provide written certification that the installation is correct and that the equipment has operated satisfactorily, verifying the complete assembly for proper alignment and connection, and quiet operation. This service shall be provided for a minimum period of one trip and one day. After the installation and operation of the equipment has been certified, the manufacturer's representative shall

train the OWNER's personnel in the proper operation and maintenance of the equipment. The OWNER may videotape the training.

E. A start-up report, acceptable to and approved by the ENGINEER, shall be completed by the manufacturer’s representative before final acceptance of the pumps.

3.4 Field Quality Control

A. Provide manufacturer's certifications verifying proper installation and operation of the pumps and pump assemblies.

B. Replace pumps and assemblies that fail testing or are otherwise damaged at no additional cost to the OWNER.

C. The CONTRACTOR shall bear all costs of field tests, including related services of the manufacturer’s representative.

END OF SECTION

SPECIAL PROVISIONS

SECTION P – Testing, Training And System Start-Up

P21080 Franklin/McVay Sanitary Sewer Extension

P1. General

1.1 Scope

This section specifies equipment and system testing and start-up services to be provided by CONTRACTOR, training of OWNER's personnel and final testing requirements for the complete facility. Additional requirements may be found in other Specification sections.

1.2 Contract Requirements

A. Testing, training and start-up services are requisite to the satisfactory completion of the Work.

B. Complete all testing, training, and start-up within the Contract Times.

C. Furnish all necessary labor, power, chemicals, tools, equipment, instruments, and services required for and incidental to completing functional testing, performance testing, and operational testing.

D. Provide competent, experienced technical representatives of equipment manufacturers for assembly, installation, testing, and operator training.

1.3 Start-up Plan

A. For each piece of equipment and each system installed, CONTRACTOR shall develop and implement a start-up and testing plan. Submit a start-up plan for each piece of equipment and each system not less than four (4) weeks prior to planned initial equipment or system start-up.

B. Provide detailed Start-up Progress Schedule with the following activities identified:

1. Manufacturer's services
2. Installation certifications
3. Operator training
4. Submission of operation and maintenance manuals
5. Functional testing
6. Performance testing
7. Operational testing

C. Provide testing plan with test logs for each item of equipment and/or system. Include testing of alarms, control circuits, capacities, speeds, flows, pressures, vibrations, sound levels, and other parameters.

D. Provide summary of shutdown requirements for existing systems if required, which are necessary to complete start-up of new equipment and systems.

E. Revise and update start-up plan based upon review comments, actual progress, or to accommodate changes in the sequence of activities.

1.4 Equipment Installation

A. Inspect all equipment and systems following installation and prior to start-up and operational testing.

B. Provide written certification that mechanical, electrical and instrumentation systems furnished are installed to manufacturer requirements prior to start-up and testing.

1.5 General Start-up and Testing Procedures

A. Mechanical Systems:

1. Remove rust preventatives and oils applied to protect equipment during construction.

2. Flush lubrication systems and dispose of flushing oils. Recharge lubrication systems with lubricant recommended by manufacturer.

3. Flush fuel system and provide fuel for testing and start-up.

4. Install and adjust packing, mechanical seals, 0-rings, and other seals. Replace defective seals.

5. Remove temporary supports, bracing, or other foreign objects installed to prevent damage during shipment, storage, and erection.

6. Check rotating machinery for correct direction of rotation and for freedom of moving parts before connecting driver.

7. Perform cold alignment and hot alignment to manufacturer's tolerances.

8. Adjust V-belt tension and variable pitch sheaves.

9. Inspect hand and motorized valves for proper adjustment. Tighten packing glands to ensure no leakage, but permit valve stems to rotate without galling. Verify valve seats are positioned for proper flow direction.

10. Tighten leaking flanges or replace flange gasket. Inspect screwed joints for leakage.

11. Install gratings, safety chains, handrails, shaft guards and sidewalks prior to operational testing.

B. Electrical Systems

1. Perform insulation resistance tests on wiring except 120-volt lighting, wiring, and control wiring inside electrical panels.

2. Perform continuity tests on grounding systems.

3. Test and set switchgear and circuit breaker relays for proper operation.

4. Check motors for actual full load amperage draw. Compare to nameplate value.

C. Instrumentation Systems

1. Bench or field calibrate instruments and make required adjustments and control point settings.

2. Leak test pneumatic controls and instrument air piping.

3. Energize transmitting and control signal systems, verify proper operation, ranges and settings.

1.6 Functional Testing

A. Functionally test mechanical and electrical equipment for proper operation after general start-up and testing tasks have been completed.

B. Demonstrate proper rotation, alignment, speed, flow, pressure, vibration, sound level, adjustments and calibration. Perform initial checks in the presence of and with the assistance of the manufacturer's representative.

C. Demonstrate proper operation of each instrument loop function including alarms, local and remote controls, instrumentation and other equipment functions. Generate signals with test equipment to simulate operating conditions in each control mode.

D. Conduct continuous 8 hour test under full load conditions. Replace parts which operate improperly.

1.7 Certificate of Proper Installation

A. At completion of functional testing, furnish written report prepared and signed by manufacturer's authorized representative, certifying equipment:

1. Has been properly installed, aligned, adjusted and lubricated.

2. Is free of any stresses imposed by connecting piping or anchor bolts.

3. Is suitable for satisfactory full-time operation under full load conditions.

4. Operates within the allowable limits for vibration.

5. Controls, protective devices, instrumentation, and control panels furnished as part of the equipment package are properly installed, calibrated, and functioning.

6. Control logic for start-up, shutdown, sequencing, interlocks, and emergency shutdown has been tested and is properly functioning.

B. Furnish written report prepared and signed by the electrical and/or instrumentation subcontractor certifying:

1. Motor control logic that resides in motor control centers, control panels, and circuit boards furnished by the electrical and/or instrumentation subcontractor has been calibrated and tested and is properly operating.

2. Control logic for equipment start-up, shutdown, sequencing, interlocks and emergency shutdown has been tested and is properly operating.

C. Co-sign the reports along with the manufacturer's representative and subcontractors.

1.8 Training of OWNER's Personnel

A. Provide operations and maintenance training for items of mechanical, electrical and instrumentation equipment. Utilize manufacturer's representatives to conduct training sessions.

B. Coordinate training schedule with City staff. Coordinate training sessions to prevent overlapping sessions. Arrange sessions so that individual operators and maintenance technicians do not attend more than two (2) sessions per week.

C. Provide operation and maintenance instructions for specific pieces of equipment or systems two (2) weeks prior to training session for that piece of equipment or system. See additional requirements for operation and maintenance instructions specified in Special Provisions, Section D - Submittals.

D. Satisfactorily complete functional testing before beginning operator training.

E. OWNER may videotape the training for later use with OWNER's personnel.

1.9 Operational Testing

A. Conduct operational test of the entire facility after all installation certifications have been provided. Demonstrate satisfactory operation of equipment and systems in actual operation.

B. Conduct operational test for continuous 3-day period.

C. OWNER will provide operations personnel, power, fuel, and other consumables for duration of test.

D. Immediately correct defects in material, workmanship, or equipment which became evident during operational test.

E. Repeat operational test when malfunctions or deficiencies cause shutdown or partial operation of the facility or results in performance that is less than specified.

1.10 Minimum Manufacturer's Service and Training Schedule

Minimum services shall be provided by the manufacturers' representatives for certain CONTRACTOR--provided equipment in accordance with the following schedule:

Minimum On-Site Time Requirements

Special Provisions Section	**Equipment**	**1 Equipment Installation Instruction**	**2 Equipment Testing Assistance**	**3 Operator Training**
Section O	Submersible Sewage Pumps	1 CWD	1 CWD	0.5 CWD
Sections S & T	Soft Start Drives	0.5 CWD	1 CWD	1 CWD

NOTE: CWD is defined as a consecutive working day consisting of an 8 hour period each day between the hours of 7:00 a.m. to 6:00 p.m. at the Project Site.

1.11 Record Keeping

Maintain and submit to ENGINEER the following records generated during start-up and testing phase of Project:

A. Daily logs of equipment testing identifying all tests conducted and outcome.

B. Logs of time spent by manufacturer's representatives performing services on the Project site.

C. Equipment lubrication records.

D. Electrical phase, voltage, and amperage measurements.

E. Insulation resistance measurements.

F. Data sheets of control loop testing including testing and calibration of instrumentation devices and set-points.

END OF SECTION

SPECIAL PROVISIONS

SECTION Q – Piping, General

P21080 Franklin/McVay Sanitary Sewer Extension

Q1. General

1.1 Description

Work under this Section applies to the furnishing and installation of piping inside a building, structure or enclosure, and miscellaneous yard piping. All work shall conform to the standard construction specifications except as modified herein. In the case of discrepancy, the more stringent provision shall apply.

1.2 Requirements

A. The CONTRACTOR shall furnish and install all piping systems shown and specified, in accordance with the requirements of the Contract Documents. Each system shall be complete with all necessary fittings, hangers, supports, anchors, expansion joints, flexible connectors, valves, accessories, heat tracing, insulation, lining and coating, testing, disinfection, excavation, backfill and encasement, to provide a functional installation.

B. The piping shown is intended to define the general layout, configuration, routing, method of support, pipe size, and pipe type. The drawings are not pipe construction or fabrication drawings. It is the CONTRACTOR's responsibility to develop the details necessary to construct all mechanical piping systems, to accommodate the specific equipment provided, and to provide and install all spools, spacers, adapters, connectors, etc., for a complete and functional system.

1.3 Reference Specifications, Codes and Standards -- Comply with the provisions of the following Codes, Specifications and Standards, except as otherwise shown or specified.

Commercial Standards

ANSI/ASME B1.20.1 Pipe Threads, General Purpose (inch)

ANSI B16.5 Pipe Flanges and Flanged Fittings, Steel Nickel Alloy and other Special Alloys

ANSI/AWWA C207 Steel Pipe Flanges for Water Works Service, Sizes 4 in through 144 in.

ANSI/AWWA C606 Grooved and Shouldered Joints

ANSI/AWS D1.1 Structural Welding Code

ASTM A 307 Specification for Carbon Steel Bolts and Studs, 6,000 psi Tensile

ASTM A 325 Specification for High-Strength Bolts for Structural Steel Joints

ASTM D 2000 Classification System for Rubber Products in Automotive Applications

ANSI/AWWA C105 Polyethylene Encasement for Ductile Iron Piping for Water and Other Liquids.

1.4 Submittals

A. The CONTRACTOR shall submit complete shop drawings and certificates, test reports, and affidavits of compliance of all piping systems and pipe supports, in accordance with the contract documents and as specified in the individual piping sections, as applicable. The shop drawings shall include all necessary dimensions and details on pipe joints, fittings, fitting specials, valves, appurtenances, design calculations, and material lists. The submittals shall include detailed layout, spool, or fabrication drawings which show all pipe spools, spacers, adapters, connectors, fittings, couplings, and pipe supports necessary to accommodate the equipment and valves provided in a complete and functional system.

B. All expenses incurred in making samples for certification of tests shall be borne by the CONTRACTOR.

C. The CONTRACTOR shall submit as part of the shop drawings a statement from the pipe fabricator certifying that all pipes will be fabricated subject to a recognized Quality Control Program. An outline of the program shall be submitted to the ENGINEER for review prior to the fabrication of any pipe.

D. Welder Qualifications shall be submitted per section 1.5.C of this Special Provision. Welding certificates stating compliance with specified standards.

1.5 Quality Assurance

A. Inspection -- All pipe shall be subject to inspection at the place of manufacture. During the manufacture of the pipe, the ENGINEER shall be given access to all areas where manufacturing is in progress and shall be permitted to make all inspections necessary to confirm compliance with the Specifications.

B. Tests -- Except where otherwise specified, all materials used in the manufacture of the pipe shall be tested in accordance with the applicable Specifications and Standards. Welds shall be tested as specified. The CONTRACTOR shall perform all tests at no additional cost to the OWNER.

C. Welder Qualifications -- skilled welders, welding operators, and tackers who have had adequate experience in the methods and materials to be used shall do all welding. Welders shall be qualified under the provisions of ANSI/AWS D1.1 by an independent local approved testing agency prior to commencing work on the pipeline. Machines and electrodes similar to those used in the WORK shall be used in qualification tests. The CONTRACTOR shall furnish all material and bear the expense of qualifying welders.

1.6 Material Delivery, Storage and Protection

All piping materials, fittings, valves, and accessories shall be delivered in a clean and undamaged condition and stored off the ground, to provide protection against oxidation caused by ground contact. All defective or damaged materials shall be replaced with new materials.

Q2. Products

2.1 General

Unless specified otherwise or indicated differently on the plans, all piping systems and process piping materials shall be as shown on the drawings.

2.2 Performance Requirements

A. Ductile Iron Pipe and Fittings -- All ductile iron pipe shall conform to the current provisions of the American Water Works Association (AWWA)/American National Standards Institute (ANSI) C151/A21.51. Unless otherwise designated, ductile iron pipe shall be thickness Class 52 with cement mortar lining.

1. Pipe and fittings shall be flanged, mechanical joints or push-on as required, as shown on the drawings or as specified. Unless otherwise shown on the drawings or specified herein, mechanical joints or push-on type joints shall be used for underground pipe installations. Push-on joints shall be "Tyton" type without exception. Thrust restraint shall be by thrust blocks or by pipe joint restraint as shown on the drawings. Restrained joints shall be the lock-type mechanical joint or approved equal at bends and for sufficient distance on each side of the bend to prevent pulling at the joint during testing. No set screw type retainer glands or joint harness systems will be allowed.

2. The following is the approved list of restrained joint systems:

a. "Thrust Lock", Pacific States Cast Iron Pipe Company

b. "Fast Grip", American Cast Iron Pipe Company

c. "TR Flex", United States Pipe and Foundry Company

d. "Snap-Lok", Griffin Pipe Products Company

e. "Megalug", EBAA Iron, Inc

f. "Field-Lok", United States Pipe and Foundry Company

g. "Super Lock", Clow

h. "Restrained Joint", McWane

i. "MJ-TJ" pipe with "Megalugs", Pacific States Cast Iron Pipe Company

j. "Lok-Ring", American Cast Iron Pipe Company

3. Flanged pipe shall be flanged in accordance with AWWA/ANSI C115/A21.15 with Class 125 drilling and full-face gaskets. Flanged pipe spools shall be made with minimum thickness Class 53 pipe.

4. All ductile iron pipe and fittings shall be cement-lined. All buried ductile iron pipe shall be seal-coated according to ANSI/AWWA C104/A21.4. The seal coat shall be coal tar. All exposed ductile iron pipe shall be coated as specified herein. Fittings for ductile iron pipe shall conform to AWWA/ANSI C110/A21.10 or AWWA/ANSI C153/A21.53. Rubber gaskets shall conform to AWWA/ANSI C111/A21.11. Fittings for push-on pipe shall be mechanical joint.

5. Grooved pipe shall be thickness Class 54 with cement mortar lining.

6. Coating:

a. Exposed ductile iron pipe shall be shop primed with Polyamidoamine Epoxy Primer. Prime paint in accordance with SSPC PS No. 13.01 for epoxy-polyamide primers. Epoxy-polyamide primers shall conform to the standards set forth in SSPC Paint Specification No. 22. Intermediate and topcoat shall be 4.0-6.0 mils each coat of Tnemec Series 20 Pota-Pox, or approved equal, Color selected by OWNER.

b. Wherever shop priming has been damaged in transit or during construction, the damaged area shall be cleaned and touched up with field primer specified herein or returned to the shop for resurfacing and repriming, at the ENGINEER's discretion.

c. Polyethylene Coating System – Provide polyethylene encasement for all buried ductile iron pipe. Except as otherwise specified, application of polyethylene encasement shall be in accordance with ANSI/AWWA C105 using Method C.

2.3 Couplings and Specials

A. Flexible Couplings

1. Flexible Couplings and Flanged Coupling Adapters -- Flexible couplings or flanged coupling adapters where shown on the drawings or where required shall be of the gasketed sleeve type with diameter to properly fit the pipe.

2. Flexible couplings for steel pipe and ductile iron pipe shall be provided where shown and shall be steel middle ring with steel followers. For exposed service, the coupling shall be lined with material equal to pipe lining material. Coupling shall be coated with primer compatible with the pipe painting system. For buried or inaccessible service, the coupling and bolts shall be epoxy coated and lined. Couplings shall be Dresser Style 38, Ford FICA series, Romac or Smith-Blair.

3. Couplings shall be assembled on the job in a manner to insure permanently tight joints under all reasonable conditions of expansion and contraction. Gasket and O-ring material to be as recommended by manufacturer for intended service.

B. Restrained Flange Adapters for Ductile Iron Pipe

Restrained flange adapters for ductile iron pipe shall conform to the following specifications:

1. Restrained flange adapters shall be made of ductile iron conforming to ASTM A536 and have flange bolt circles that are compatible with ANSI/AWWA C115/A21.15. Restraint for the flange adapter shall consist of a plurality of individually actuated gripping wedges to maximize restraint capability. Torque limiting actuating screws shall be used to insure proper initial set of the gripping wedges.

2. The flange adapters shall be capable of deflection during assembly or permit lengths of pipe to be field cut to allow a minimum 0.6-inch gap between the end of the pipe and the mating flange without affecting the integrity of the seal. For ductile iron pipe, the flange adapter shall have a safety factor of 2:1 minimum.

3. Restrained flange adapters for ductile iron pipe shall be EBAA Iron Series 2100 Megaflange - flange adapter or approved equal.

C. Pipe to Structure Flexible Connector

A flexible pipe to manhole connector shall be used in the connection of pipe to precast manholes, wet wells and other structures. The connector shall be the sole element relied on to insure a flexible watertight seal of the pipe to the manhole. No adhesives or lubricants shall be employed in the installation of the connector to the structure. The rubber for the connector shall comply with ASTM C923 and consist of EPDM and elastomers designed to be resistant to ozone, weather elements, chemicals, including acids, alkalis, animal and vegetable fats, oils and petroleum products from spills. The connector shall be Kor-N-Seal or approved equal.

All stainless steel elements of the connector shall be totally non-magnetic, Series 304 Stainless, excluding the worm screw for tightening the steel band around the pipe which shall be Series 305 Stainless. The worm screw for tightening the steel band shall be torqued by a break away torque wrench available from the precast manhole supplier and set for 60-70 inch/lbs.

The connector shall be installed in the manhole wall by activating the expanding mechanism in strict accordance with the recommendation of the connector manufacturer.

The connector shall be of a size specifically designed for the pipe material and size being utilized on the project.

Rubber seals used in concrete sewer pipe and culvert joints must meet the requirements given in ASTM specification C923.

D. Wall Sleeve Seals

Annular space between pipe and wall openings shall be filled with suitable material to prevent passage of gases or liquids, but shall also permit minor pipeline movement. Manufactured sleeve seals shall be of the size and material for pipe and wall opening and liquid characteristics present. All metallic materials shall be 316 stainless steel and suitable for direct sewage and sulfide contact. Wall sleeve seals shall be Link-Seal as manufactured by Thunderline Corporation, or approved equal.

Q3. Execution

3.1 General

Pipe shall be installed in accordance with good trade practice. The methods employed in handling and placing of pipe, fittings, and equipment shall be such as to insure that after installation and testing they are in good condition. Should damage occur to the pipe, fitting or equipment, repairs satisfactory to the ENGINEER shall be made.

All piping and appurtenances shall be installed in the position and to accurate lines, elevations, and grades as shown on the plans or specified herein. Where possible, piping shall be sloped to permit complete drainage. Where grades are not shown, pipe shall be laid to grade between control elevations shown on the plans.

All buried piping shall be installed with tracer wire and tracer tape. Tape shall be buried 12 inches below the ground and 12 inches above the top of the pipe or as recommended by manufacturer. Tape shall be continuous and labeled the same as the piping system.

3.2 Handling and Storage of Pipe

During loading, transportation and unloading, every precaution shall be taken to prevent injury to the pipe or pipe lining. Any damaged pipe shall be replaced or repaired to the satisfaction of the ENGINEER. Where pipe is placed in stockpiles, it shall be neatly piled and blocked with strips between tiers.

3.3 Pipe Supports and Hangers

A. All pipe shall be secured in place by use of blocking, hangers, brackets, clamps or other approved methods, and the weight thereof shall be carried independently of pump casings or equipment. All hangers and supports are shown on the drawings.

B. Supports for exposed piping shall conform to the latest requirements of the ANSI Code for Pressure Piping B31.10 and MSS Standard Practice SP-58, except as supplemented or modified by the requirements of this specification. Designs generally accepted as exemplifying good Engineering practice by use of stock or production parts shall be utilized wherever possible.

C. Hanger supports shall be as noted below with at least one support adjacent to the joint for each length of pipe, at each change in direction and at each branch connection. Sufficient hangers shall be provided to maintain proper slope without sagging. Support spacing shall not exceed manufacturer's recommendations, nor as listed below.

Pipe	Maximum Support Spacing (Feet)
Steel Pipe	
Under 3 inches	6
3 inches and Over	12
Cast or Ductile Iron	
Under 4 inches	6
4 inches and Over	12
Stainless Steel	
Under 1-1/2 inches	4
1-1/2 inches to 4 inches	6
Over 4 inches	12
Copper Pipe	6
PVC Pipe	
Under 2-1/2 inches	4
2-1/2 inches and Over	6

D. Spacing of clamps for support of vertical piping shall be close enough to keep the pipe in alignment as well as to support the weight of the piping and contents unless other vertical support is shown, but in no case shall be more than 12-feet.

E. Provide adjustable hangers for all pipes, complete with adjusters, swivels, rods, etc. Size hangers to clear insulation and guide where required, as well as support piping. All rigid hangers shall provide a means of vertical adjustment after erection. Hanger rods shall be machine-threaded. Continuous threaded rods will not be allowed.

F. Clevis or band-type hangers (B-Line FIG B3100) or approved equal shall be provided by CONTRACTOR. Strap hangers not permitted.

G. Provide floor stands, wall bracing, concrete piers, etc., for all lines running near the floors or near walls and which can not be properly supported or suspended by the walls or floors. Pipe lines near concrete or masonry walls may also be hung by hangers carried from wall brackets at a higher level than pipe. Hanging of any pipe from another is prohibited.

H. Equipment shall be positioned and aligned so that no strain shall be induced within the equipment during or subsequent to the installation of pipework.

I. When temporary supports are used, they shall be sufficiently rigid to prevent any shifting or distortion of the piping or related work.

J. In erecting the pipe, a sufficient number of screwed unions or flanged joints shall be used to allow any sections or runs of pipe to be disconnected without taking down adjacent runs. Flexible couplings shall be installed where shown on the drawings and at such other points as may be required for ease of installation or removal of the pipe, subject to approval of the ENGINEER. Flexible couplings shall be of the positive lock type where necessary to prevent separation of pipe due to internal pressures.

K. Pipe Support Welding Requirements

1. Filler metals shall meet AWS A5 Specifications.

2. Electrodes shall be 70 ksi compatible with base metal, welding process and position. Low hydrogen electrodes for SMAW. Meet minimum toughness CVN value of 20 ft. lbs. at -20 degrees F for all welding of moment frames and full penetration welds. Do not mix weld electrodes that reduce the CVN value of welds.

3. Comply with AWS Code for the procedures of manual shielded metal-arc welding, the appearance and quality of welds made and the methods used in correcting welding work.

4. Make welds by the electric-arc process per AWS standards specified above. Where weld size is not indicated, make weld full thickness of member. No splices, other than those indicated, will be permitted on any steel member except where written approval is obtained from the ENGINEER. Evidence of an unauthorized splice will be cause for rejection.

3.4 Installation at Concrete Walls and Footings

All buried piping entering structures shall have a flexible connection installed less than two feet outside the structure line or as close to the wall as practical.

3.5 Detailed Installation Requirements

A. Mechanical Joint Ductile Iron Pipe -- Mechanical joints shall be made as follows: Gland shall be placed on spigot end of pipe with lip extension toward the joint. The rubber gasket shall then be slipped on the pipe with its thick edge toward the gland. The gasket and joint surfaces shall then be slipped on the pipe with its thick edge toward the gland. The gasket and joint surfaces shall then be thoroughly wetted using a soapy solution made with vegetable soap or similar soap as recommended by the manufacturer. The spigot end of the pipe shall then be inserted to full depth on the mechanical joint socket and the gasket pressed firmly into place in the bell in order to obtain an even "set" all around the joint. The gland shall then be moved into place, the bolts inserted, and the nuts taken up tightly with fingers. The nuts shall then be tightened gradually by a wrench, a half turn at a time, moving wrench from one nut to another repeating until all nuts are uniformly tight. Final tightness shall be with a torque wrench to the torque recommended by the pipe supplier. Retainer gland wedge screws shall be tightened in a similar fashion until nuts are twisted off.

B. Flanged Pipe -- Flanged joints shall be made up square, with even pressure on the gaskets, and shall be watertight. Gaskets shall be non-asbestos and non-phenolic compressed sheet packing, best-quality full-face with nitrile rubber binder, one-sixteenth - (1/16) inch thick, conforming to ANSI B16.21 suitable for the operating and test pressures of the pipe system equal to Garlock 3000. Gaskets for 20 inches and larger flanged joints may be one-eighth -(1/8) inch thick.

C. The joining of pipe lines other than specified above shall be by approved first class methods, using applicable procedures outlined above and/or manufacturer's recommended practices.

3.6 Testing

Testing of all water and field plant piping systems shall be performed as specified elsewhere in this document.

END OF SECTION

SPECIAL PROVISIONS

SECTION R – General Electrical Provisions

P21080 Franklin/McVay Sanitary Sewer Extension

R1. General

1.1 Description of Work

A. The work consists of furnishing all labor, materials, services, tools and other equipment necessary for the construction, installation, connection and testing of all electrical work for this project as shown on the drawings or specified herein.

B. Costs/charges for installation of all permanent and temporary facilities shall be included in the lump sum bid for electrical service to pumping station. This includes any up-front money required by the utility to provide permanent service.

1.2 Related Work

A. Special Provisions, Section S - Basic Electrical Materials and Methods

1.3 Intent of Drawings and Specifications

A. Riser and other diagrams are schematic only and shall not be used for obtaining quantities.

B. The electrical drawings do not show complete details of the site conditions. The CONTRACTOR shall check actual conditions.

1.4 Coordination of Work

A. The CONTRACTOR shall plan his work in coordination with the power utility authorities.

B. The CONTRACTOR shall field verify all dimensions of equipment to be installed or provided by others so that correct clearances and connections may be made between the work installed by the CONTRACTOR and equipment installed or provided by others.

C. The CONTRACTOR shall arrange all conduit runs so that they do not interfere with duct work, structural members, etc.

D. All working measurements shall be taken from the sites, checked with those shown on the drawings, and if they conflict, reported to the ENGINEER at once, and before proceeding with the work. Should the CONTRACTOR fail to comply with this procedure, he shall alter his work at his own expense as directed by the ENGINEER.

E. No extra payments will be allowed where obstructions in the work of other trades, or work under this contract requires offsets to conduit runs.

1.5 Supervision

A. The CONTRACTOR shall maintain adequate supervision of the work and shall have a responsible person in charge during all times that work under this contract is in progress, or when necessary for coordination with other work.

1.6 Codes

A. Work shall conform to the National Electrical Code (NEC), and State codes and other applicable codes, even though not specifically mentioned for each item. These shall be regarded as the minimum standard of quality for materials and workmanship.

1.7 Workmanship

A. All work shall be performed by personnel skilled in the particular trade. Workmanship shall conform to National Electrical Contractors Association Standard of Installation.

B. The ENGINEER shall be the sole judge as to whether or not the finished work is satisfactory; and if in his judgment any material or equipment has not been properly installed or finished, this CONTRACTOR shall replace the material or equipment whenever required, and reinstall in a manner entirely satisfactory to the ENGINEER without any increase in cost to the OWNER.

C. All work shall meet all requirements of the NEC for wet locations. All wiring methods shall conform to NEC Requirements for Wet Locations.

1.8 Permits, Fees and Service Charges

A. CONTRACTOR shall obtain all electrical permits and pay all related fees.

1.9 CONTRACTOR's Record Drawings

A. The CONTRACTOR shall maintain a neatly marked set of record drawings. In addition, the locations of panels, field mounted instruments and panels, terminal boxes, junction boxes and any other materials included in this contract shall be shown. Drawings shall be kept current with the work as it progresses and shall be subject to inspection by the ENGINEER at any time.

R2. Products

2.1 Materials

A. See subsequent electrical sections and the drawings for specified materials.

2.2 Portable or Detachable Parts

A. The CONTRACTOR shall retain in his possession and shall be responsible for all portable and detachable parts or portions of installations such as fuses, key locks, adaptors, blocking chips, and inserts until completion of his work.

B. These parts shall be delivered to the ENGINEER and an itemized receipt obtained. This receipt, together with 2 copies of the final inspection certificate, shall be attached to the CONTRACTOR's request for final payment.

C. All equipment shall be demonstrated to operate in accordance with the requirements of this specification and the manufacturer's recommendation.

R3. Execution

3.1 Support Backing

A. Provide any necessary backing required to properly support all fixtures and equipment installed under this contract.

3.2 Cutting, Patching and Framing

A. The CONTRACTOR shall determine in advance the locations and sizes of all sleeves, chases, and openings necessary for the proper installation of his work.

B. Whenever practical, inserts or sleeves shall be installed prior to covering work. Cutting and patching shall be held to a minimum. All required holes in concrete construction shall be made with a core drill and patched with non-shrink grout.

C. Cutting, fitting, repairing and finishing of carpentry work, metal work, or concrete work, and the like, which may be required for this work shall be done by craftsmen skilled in their respective trades. When cutting is required, it shall be done in such a manner as not to weaken walls, partitions, or floors; and holes required to be cut in floors must be drilled without breaking out around the holes.

3.3 Tests

A. The CONTRACTOR shall furnish all labor, material, instruments and tools to make all connections for testing of the electrical and instrumentation installation. All equipment shall be demonstrated as operating properly prior to the acceptance of the work. All protective devices shall be operative during testing of equipment. The tests shall be made under the supervision of the ENGINEER. All deficiencies or unsatisfactory conditions as determined by the ENGINEER or inspecting authorities shall be corrected by the CONTRACTOR in a satisfactory manner at his own expense.

B. After visual inspection of joints and connections and the application of tape and other insulating materials, all sections of the entire wiring system shall be thoroughly tested for

shorts and grounds. A log of results for each circuit shall be kept by the CONTRACTOR and presented to the ENGINEER.

C. A phase rotation check shall be made to demonstrate that all power receptacles, service feeders, main power feeders, and emergency generator have the same A-B-C phase rotation and ground relationships.

D. Equipment shall be tested by operating all electric motors, relays, controls, switches, heaters, etc. sufficiently to demonstrate proper installation and electrical connections. Control and emergency conditions shall be artificially simulated where necessary for complete system or subsystem.

E. Insulation resistance measurements of each circuit shall be made with loads connected and contactors, if any, blocked closed to give complete circuits. Insulation resistance of complete circuit shall be measured from the circuit breaker load terminals with the breaker open. A log of complete results shall be prepared by the CONTRACTOR and presented to the ENGINEER. Values of resistance shall be 10 megohms or greater.

END OF SECTION

SPECIAL PROVISIONS

SECTION S – Basic Electrical Materials And Methods

P21080 Franklin/McVay Sanitary Sewer Extension

S1. General

1.1 Description of Work

A. The work consists of furnishing all labor, materials and equipment required for electrical work as shown on the drawings and as further described in these specifications.

1.2 Related Work

A. Special Provisions, Section R - General Electrical Provisions

1.3 Submittals

A. Submit shop drawings of the following items for approval of the ENGINEER.

1. Raceways
2. Cable terminators
3. Junction boxes
4. Conductors
5. Wiring devices
6. Relays

1.4 Reference Standards

A. American National Standards Institute (ANSI).
B. American Society for Testing and Materials (ASTM:).
C. Federal Specification (FS).
D. National Electric Code (NEC).
E. National Electrical Manufacturers Association (NEMA).
F. Insulated Cable Engineer's Association (ICEA).
G. Institute of Electrical and Electronic Engineers (IEEE).
H. Underwriters Laboratory Inc. (UL).
I. Washington Division of Occupational Safety and Health
J. Washington Labor and Industries

1.5 Intent of Drawings and Specifications

A. The drawings are partly diagrammatic and do not necessarily show the physical arrangements of the conduit and equipment unless specifically dimensioned. Diagrams are schematic only and shall not be used for obtaining quantities or lineal runs of conduit.

1.6 Regulations and Permits

A. The CONTRACTOR shall comply with all applicable codes, ordinances and regulations, including the National Electrical Code, National Electrical Safety Codes, and the State of Washington.

B. The CONTRACTOR shall obtain and pay for all permits, inspections, utility connection fees and other costs incidental to providing or modifying the electrical installations.

C. The CONTRACTOR shall obtain a Certificate of Electrical Inspection from the local inspecting authority and submit to the OWNER upon completion of the project.

1.7 Coordination of Work

A. The CONTRACTOR shall plan his work so that it proceeds with a minimum of interference with other trades.

B. Check all dimensions of the equipment to be installed or provided by others so that correct clearance and connections may be made between the work installed by this CONTRACTOR and the equipment installed or provided by others.

S2. Products

2.1 Quality of Materials

A. All contract materials shall be new, of proven quality, without imperfections and blemishes. All materials not specifically detailed in this specification required to accomplish the completion of this contract shall be of compatible quality to the items specified and be approved by the ENGINEER. All materials shall be products of manufacturers regularly engaged in production of such equipment and shall be of the manufacturer's latest design. Where 2 or more units of the same class of equipment are required, these units shall be of the same manufacture. All material and equipment shall be per NEMA, ANSI, IEEE or ICEA Standards as applicable, except as modified by these specifications. All material shall be U/L labeled as applicable.

2.2 Raceways

A. All raceways shall be UL approved for the application.

B. Rigid steel conduit: Provide zinc-coated rigid steel conduit conforming to Federal Specification WW-C-581.

C. Flexible metallic conduit: Provide liquid tight flexible conduit, zinc-coated steel core, extruded gray PVC cover, UL approved, Sealtite type "UA" or Liquatite type "LA", or equal. Where permitted by local inspection authority, sizes larger than 3-inch shall be Sealtite type "EF", or Liquatite type "LT", or equal.

D. Flexible couplings: Provide liquid light flexible explosion proof couplings with integral electrical conductivity, suitable for Class 1 Division 1 environments.

E. Rigid PVC conduit: Provide rigid polyvinyl chloride (PVC) conduit, schedule 40, UL listed for concrete encased, direct burial underground, and exposed use. Rigid PVC conduit, including couplings, elbows and nipples shall conform to the requirements of the latest edition of FS-WW-C-1094, and NEC.

2.3 Conduit Fittings

A. Provide conduit fittings as follows unless otherwise noted or detailed. Catalog numbers shown are RACO/ /Appleton Electric Company unless otherwise noted. Similar products of other manufacturers are equally acceptable.

Rigid Conduit Insulating Bushings	- Series 1400/ /Series BBU
Rigid Conduit Set Screw Fittings	- 3010-3022, 3102-3116// Series SRNTC and SNTCC
Flexible Metallic Conduit Fittings	- Pylets (Pyle-National)// Unilets
Expansion Joints	- Adalet Type STR//OZ Type AX or TX
Conduit Wall Entrance Sealing Fitting	- OZ Type FSX-GALV//or FSC-G-GALV

2.4 Outlet Boxes

A. Provide outlet boxes as follows unless otherwise noted, detailed, or existing.

Lighting Outlet Boxes	Appleton Elec. Co. JB series, malleable iron
Switch, Receptacles, Telephone and Junction Boxes	FS Series with cast cover and gasket, malleable iron
Junction Boxes Explosion Proof	Appleton Elec. Co. series DER, GUB1, GUB2, GUB3, EJB, EXB

2.5 Pull Boxes

A. Provide galvanized cast iron pull boxes as shown on the drawings. NEMA 7 rated junction boxes shall be provided with screw-on front opening cover.

2.6 Conductors

A. This specification covers all conductors not specified in other sections. All conductors and cable shall conform to UL, Federal Specification J-C-30, or ICEA as applicable. Provide new cable manufactured within one year of installation.

B. 600 volt power, lighting and control cable: Provide copper conductors unless otherwise specified, conforming to Federal Specification J-C-30. For types THHN, THWN, or THW provide insulation conforming to UL-83. For type RHW and RHH, provide insulation conforming to ICEA S-19081. For type XHHW, provide insulation conforming to ICEA S-66-524. Provide neoprene jacket on RHW-RR type cables in accordance with ICEA S-19-81 specifications.

C. Minimum conductor size: Provide No. 12 AWG minimum branch circuit wire size. Provide No. 14 AWG control circuits unless otherwise specified or required by over-current protection. Provide smaller conductor sizes for specific application where shown on the drawings.

D. Class 2 remote control and signage conductors: Provide cables UL approved for such use. Voltage rating shall be not less than 600 volts. Utilize multi -conductor cables with like or related functions generally grouped together. Unless otherwise specified or shown on the drawings, utilize No. 14 AWG conductors.

E. Instrumentation cables: Multi-conductor cables shall have the quantity and size of conductors shown on the plans. Individual conductors shall be bare soft annealed copper Class B, 7-strand concentric per ASTM B-8. Individual conductor insulation shall be flame-retardant per UL 13, 15 mils nominal thickness, with a 105 degree C temperature rating. Conductor pairs shall be uniquely identified according to manufacturer's standard method. Overall cable assembly shall have 2.35 mil (minimum) aluminum-polyester tape shield overlapped for 100% coverage and provided with a 7-strand tinned copper drain wire the same size as an individual conductor. The jacket shall be flame-retardant per UL 13, with a 105 degree C temperature rating and a ripcord laid longitudinally under the jacket to facilitate removal. Conductors shall be twisted pairs and the cable shall be rated for operation to 600 volts.

S3. Execution

3.1 Conduit Installation

A. Conduit buried in earth: Install raceways to provide not less than 36 inches cover to finished grade. Pitch to drain away from station; there shall be no trapped runs. Grade trenches and place pipe bedding material to provide uniform trench bottom for raceway support. Buried raceway shall be PVC.

B. Provide rigid steel conduit at all exposed locations and buried in concrete.

C. Exposed conduit shall be run in straight lines parallel to column lines, walls or beams. Where conduit is grouped, the bends and fittings shall be installed to present an orderly appearance. Unnecessary bending or crossing shall be avoided.

D. Supports for exposed conduit runs shall be furnished and installed within 3 feet of each box. Supports shall be secured by means of expansion inserts in concrete.

E. Conduit and fittings shall be properly protected during the construction period against mechanical injury from any cause. Conduit which extends out of floors, walls or slabs shall be boxed or otherwise protected and ends shall be capped with metal pipe plugs.

F. Rigid conduit joints and connections shall be made thoroughly watertight and rustproof by means of thread compound that will not insulate the joint. Each threaded joint shall be thoroughly cleaned to remove all the cutting oil before the compound is applied. Running threads will not be allowed. Erickson couplings may be used in dry and exposed locations provided that in wet or exposed locations, they are installed with fixed threaded connection at the top of vertical runs. Joints in PVC coated conduit shall be field coated in accordance with the manufacturer's recommendations.

G. Instrumentation cables and conductors shall be installed in conduit and conform to the same standard as power wiring.

3.2 Wire and Cable Installation

A. Conduit shall be thoroughly cleaned of all foreign material just prior to pulling the wire or cable. Lubricants shall be compounds specifically prepared for cable pulling and shall not contain petroleum or other products that will affect cable insulation. Lubrications shall be UL approved.

B. Splicing of conductors No.8 AWG OR SMALLER shall be by pre-insulated spring-pressure connectors, such as "Scotchlok" Types Y, R and B, Ideal "Wingnut" or equal. All uninsulated splices, joints and free ends of conductors shall be covered with rubber and friction tape or high-dielectric strength, plastic tape.

C. Terminal strips in panels shall be identified throughout the equipment utilizing unique numbering systems at the switchboard and the control panel.

D. Wires terminating on terminal strips shall be tagged with the designation of the terminal strip and the number of the terminal to which they are connected. Wires shall be numbered with Brady nylon wire markers at all accessible locations.

E. Wiring diagrams shall show the terminal strips, terminals, and their identifying designations.

3.3 Equipment Installation

A. Boxes and cabinets shall be installed on the surface level and plumb and affixed to the surface with expansion inserts in concrete and machine screws to tapped holes in metal surfaces.

B. Interconnections between equipment shall be made per manufacturer's wiring diagrams. All wiring shall be clearly labeled and external connections in control panel and remote cabinet brought out to terminal blocks.

C. In wet wells, all anchors, attachments, supports and hardware shall be stainless steel. All fabricated steel equipment shall be hot-dip galvanized after fabrication. All enclosures and fittings shall be corrosion resistant stainless steel and rated for the explosion hazard.

END OF SECTION

SPECIAL PROVISIONS

SECTION T – Springfield Utility Board (SUB) Waterline and Electrical Facilities

P21080 Franklin/McVay Sanitary Sewer Extension

The following specification sections cover Schedule B work including but not limited to construction of SUB's waterline and electrical facilities and appurtenances.

SPRINGFIELD UTILITY BOARD

CONSTRUCTION SPECIFICATIONS

FOR W.O.# 13947, McVAY HIGHWAY TRANSMISSION LINE PROJECT

TABLE OF CONTENTS

DIVISION W-400M SPRINGFIELD UTILITY BOARD REQUIREMENTS 1

W-401M.00 WATER MAINS AND APPURTENANCES 1

W-401M.01 Description 1
W-401M.02 Material 1

W-401M.02.01 General 1
W-401M.02.02 Water Line Pipe 1

W-401M.02.02A Ductile Iron Pipe 1
W-401M.02.02B PVC Duct 2

W-401M.02.02B1 SUB Electrical and Fiber Conduit 2
W-401M.02.02B2 Other Fiber Conduit 2

W-401M.02.02C Tracer Wire 2

W-401M.02.03 Casing 3

W-401M.02.03A Water Line Steel Casing 3
W-401M.02.03B Electric Conduit Steel Casing 3
W-401M.02.03C Water Line Casing Spacers 3
W-401M.02.03D Electrical Conduit Bore Spacers 3
W-401M.02.03E Thermally Conductive Grout/Slurry 4
W-401M.02.03F Water Line Casing End Seals 4
W-401M.02.03G Casing Cathodic Protection 4

W-401M.02.04 Water Line Fittings 4

W-401M.02.04A Ductile Iron 4
W-401M.02.04B Brass/Bronze Fittings 5

W-401M.02.04B1 Corporation Stops 5

W-401M.02.04B2 Angle Meter Valves 5
W-401M.02.04B3 Couplings and Unions 5

W-401M.02.05 Pipe Joints 5

W-401M.02.05A Flanged Joint 5
W-401M.02.05B Mechanical Joints 6
W-401M.02.05C Push-on Joints 6
W-401M.02.05D Solvent Weld 6

W-401M.02.06 Valves and Accessories 6

W-401M.02.06A Resilient-Seated Gate Valves 6
W-401M.02.06B Butterfly Valves 6
W-401M.02.06C Valve Operator Extensions 7
W-401M.02.06D Adjustable Valve Boxes 7

W-401M.02.06D1 Valve Box Lids 7
W-401M.02.06D2 Valve Box Ring 7
W-401M.02.06D3 Valve Box Insert 7
W-401M.02.06D4 Valve Box Riser 7

W-401M.02.07 Thrust Restraint 8

W-401M.02.07A Mechanical Joint Restraint Devices 8
W-401M.02.07B Weldment Ring Restraint Joint 8
W-401M.02.07C Push-On-Joint Restraining Gaskets 9

W-401M.02.08 Polyethylene Meter Boxes 9

W-401M.03 CONSTRUCTION/WORKMANSHIP 9

W-401M.03.01 Progress of Construction 9
W-401M.03.02 Transporting and Handling of Materials 10
W-401M.03.03 Storage of Materials 10
W-401M.03.04 Distribution of Materials 10
W-401M.03.05 Placing of Materials in the Trench 11

W-401M.03.05A Tracer Wire 11

W-401M.03.06 Sanitary Practices During Installation 11
W-401M.03.07 Cutting 12
W-401M.03.08 Allowable Deflection at Joints 12
W-401M.03.09 Jointing 12

W-401M.03.09A Flanged Joints 13
W-401M.03.09B Mechanical Joints 14
W-401M.03.09C Push-on Joint 14
W-401M.03.09D Screwed Joints 14

W-401M.03.09E Solvent Weld 14

W-401M.03.10 Assemblies 15

W-401M.03.10A Meter Boxes 15
W-401M.03.10B Valves and Valve Tiles 15
W-401M.03.10C Fittings 16
W-401M.03.10D Dead-end Mains and Flush Points 16

W-401M.03.11 Deviations From Plans 16
W-401M.03.12 Filling the Main 17
W-401M.03.13 Flushing 17
W-401M.03.14 Sterilization 18

W-401M.03.14A Dechlorination 18

W-401M.03.15 Tapping Existing Mains 19
W-401M.03.16 Operation of Existing Valves 19

W-401M.04 Testing 19

W-401M.04.01 Hydrostatic Testing 19

W-401M.04.01A Pressure Testing 19
W-401M.04.01B Leakage Testing 20

W-401M.04.02 Bacteriological Testing 21
W-401M.04.03 Conductivity Testing 22

W-401M.05 Duties and Authority of Inspectors 22
W-401M.06 Inspection 22
W-401M.07 Incidentals 23

STANDARD DRAWINGS 24

DIVISION W-400M SPRINGFIELD UTILITY BOARD REQUIREMENTS

The following specifications are intended to apply specifically to the water and electrical requirements for the Franklin/McVay Sanitary Sewer Extension (P21080). Any items not covered in these specifications related to the water and electrical facilities installations in accordance with the contract documents shall be included in the City of Springfield contract documents.

W-401M.00 WATER MAINS AND APPURTENANCES

W-401M.01 Description

This section covers the pipes, fittings, services, and appurtenant materials normally used for water distribution systems and the care in transporting, handling, and storage of such materials in addition to the sanitation, installation, flushing, and sterilization requirements for the construction of water lines.

Unless specified herein, pipe installation shall be performed in strict conformance with the manufacturer's recommendations.

W-401M.02 Material

W-401M.02.01 General

Materials shall be furnished by the Contractor as indicated in the plans. The Contractor's responsibility for material shall begin at the point of delivery thereof to said Contractor or on the day of the award of the Contract for materials existing on the construction site prior to that time. The Contractor shall examine all material at the time and place of delivery to him and shall reject all defective material. Materials shall conform to all specified requirements and shall have been manufactured in the United States, unless otherwise approved by the Engineer. Records of specific tests and/or affidavits of compliance shall be supplied for appropriate materials upon request.

Pursuant to Oregon Administrative Rules Chapter 333-061-0050(1)(e), only materials designed for potable water service and meeting National Sanitation Foundation (NSF) Standard 61, Section 9 – Drinking Water System Components – Health Effects, or equivalent, shall be used in those elements of the water system which are in contact with potable water.

W-401M.02.02 Water Line Pipe

W-401M.02.02A Ductile Iron Pipe

Unless otherwise specified, all pipe for water mains shall be cement mortar lined ductile iron pipe in conformance with AWWA C151 (ANSI A21.51) classes 50 through 56 with joint ends as specified on the Plans. Cement mortar lining shall be in conformance with AWWA C104 (ANSI A21.4). The minimum thickness classes shall be Class 52 for 4-inch pipe and 6-inch pipe, and Class 50 for pipe 8 inches and larger.

Acceptable ductile iron pipe:

American U.S. Pipe Pacific States

W-401M.02.02B PVC Duct

W-401M.02.02B1 SUB Electrical and Fiber Conduit

PVC duct used for electrical and fiber conduit shall be Schedule 40, gray in color with integral female socket for solvent weld joint. Sizes and bends shall be as noted on the plans. When 3 or more 4" conduits are installed in the same trench, conduit spacers are required. Spacers shall be installed at specific intervals per the manufacturer's instructions for the entire conduit run. Spacers shall be non-metallic and provide a minimum of 3" clear space between the outside edges of the conduits they are spacing. All conduits installed for electrical or fiber purposes shall be installed in accordance with SUB Electric Division Standard Drawing ESD. Each conduit run shall be tested by having an appropriate sized mouse and 1,250lb mule tape blown through to verify conduit continuity. Testing on conduits shall be done in the presence of a Springfield Utility Board representative. No individual conduit run shall have bends, vertical or horizontal, totaling more than 270°. PVC sweeps shall have a minimum radius of 36 inches.

W-401M.02.02B2 Other Fiber Conduit

PVC duct used for fiber conduit and installed for utilities/entities other than the Springfield Utility Board shall be Schedule 40, off white in color with integral female socket for solvent weld joint. Sizes and bends shall be as noted on the plans. All conduits installed for fiber purposes shall be installed in accordance with SUB Electric Division Standard Drawing ESD 0074 Each conduit run shall be tested by having an appropriate sized mouse and 1,250lb mule tape blown through to verify conduit continuity. Testing on conduits shall be done in the presence of a Springfield Utility Board representative. No individual conduit run shall have bends, vertical or horizontal, totaling more than 270°. PVC sweeps shall have a minimum radius of 36 inches.

W-401M.02.02C Tracer Wire

All water pipe shall have a copper tracer wire installed with it per the SUB Water Division Standard Drawings. Tracer wire shall be 14 gauge solid copper with a minimum 40 mil PVC or HDPE insulation, blue in color, rated specifically for direct burial.

W-401M.02.03 Casing

W-401M.02.03A Water Line Steel Casing

Casing pipe for open cut construction shall be uncoated steel pipe conforming to ASTM A 139 with a minimum diameter as specified on the Plans and a nominal thickness of 8/16" (0.500"). Steel shall be A-139 grade B. Welded joints shall be in accordance with AWWA C 206. The annular space between the water line and carrier pipe shall not be filled. Water line installed in a casing pipe shall be restrained joint pipe in accordance with W-401M.02.06B of these specifications.

W-401M.02.03B Electric Conduit Steel Casing

Casing pipe for open cut construction shall be uncoated steel pipe conforming to ASTM A139 with a minimum diameter as specified on the Plans and a nominal thickness of 3/8" (0.375"). Steel shall be A139 Grade B. All welds shall be entirely circumferential in order to provide complete containment of the injected thermally conductive grout/slurry specified in 401M.02.03E of these specifications. Casing shall accommodate bore spacers described in W-401M.02.03D of these specifications.

W-401M.02.03C Water Line Casing Spacers

Casing spacers shall be CCI stainless steel casing spacers or approved equal.

W-401M.02.03D Electrical Conduit Bore Spacers

Bore Spacers shall conform to the following requirements and be approved by SUB Electric:

1. Made of High-density polyethylene (HDPE) stress relieved sheets.
2. Capable of supported 6 each 4" schedule 40 PVC conduits and 1 each 2" schedule 40 PVC conduit with a minimum 3" spacing between 4" conduits, and 2" between 4" and 2" conduits.
3. Sufficient tensile and compressive strength to support conduit during thermally conductive grout/slurry filling.
4. Factory installed compact wheel assembly (2 required per spacer).
5. Float stop (2 required per spacer).
6. Provisions for flow holes and injection pipe holes for thermally conductive grout/slurry filling.
7. Maximum 5 feet between spacers.
8. Conduits maintain same position entering and leaving the casing.

W-401M.02.03E Thermally Conductive Grout/Slurry

The grout/slurry that encases the ducts is required to conduct the heat dissipated by the power cables from the ducts to the steel casing and on into the ground. The pressure applied within the casing during the grout/slurry filling process shall not deform or compromise the PVC conduit.

W-401M.02.03F Water Line Casing End Seals

Water line casing end seals shall be Advance Products & Systems (APS) model AW or approved equal.

W-401M.02.03G Casing Cathodic Protection

Cathodic and corrosion protection shall be provided for all casings. One 32 lb high potential magnesium anode shall be provided at each end of the casing. Anodes shall be exothermically welded directly to the encasement pipe by a #12 A.W.G. grounding wire and protected by an elastomeric filled exothermic weld cap at each end of the casing per standard drawing W1.31M.

W-401M.02.04 Water Line Fittings

W-401M.02.04A Ductile Iron

All tees, crosses, elbows, reducers, combinations thereof, and other miscellaneous iron fittings shall be cement lined ductile iron in conformance with AWWA C110 (ANSI A21.10) or AWWA C153 (ANSI 2l.53). Ductile Iron material shall be ASTM A536. Cement lining shall be in conformance with AWWA C104 (ANSI A21.4). Joint ends and lay length of the fittings shall be as specified on the Plans. All joints shall be in full compliance with AWWA C111 except bolts shall be low alloy steel. High Strength Cast Iron Bolts (HSCI) are specifically excluded. Unless otherwise noted on the Plans, all fittings shall have minimum pressure ratings of 150 psi.

Fitting manufacturers shall be ISO 9000 Certified. Proof of certification shall be submitted prior bidding the manufactures fittings.

Acceptable ductile iron fittings:

American	U.S. Pipe	Tyler
Union Foundry	Trinity Valley	Bachman
Sigma	Star	

W-401M.02.04B Brass/Bronze Fittings

W-401M.02.04B1 Corporation Stops

Corporation stops for water services, air valves, chlorinating, and testing shall be supplied in conformance with AWWA C800 and ASTM B62, Mueller male (CC) corporation valve inlet thread, unless otherwise noted on the Plans. Outlet to be compression joint or Mueller Instatite for copper tube size (CTS).

Acceptable Corporation stops:

Mueller Ford McDonald

W-401M.02.04B2 Angle Meter Valves

Angle meter valves shall be supplied in conformance with AWWA C800 and ASTM B62. Inlet to be compression joint or Mueller Instatite for CTS.

Acceptable angle meter valves:

5/8-inch x 3/4-inch Meter		1-inch Meter	
Ford	McDonald	Ford	McDonald
Mueller		Mueller	

W-401M.02.04B3 Couplings and Unions

Couplings and unions shall be supplied in conformance with AWWA C800 and ASTM B62. Connections to service lines shall be compression joint or Mueller Instatite for CTS.

Acceptable couplings and unions:

Ford McDonald Mueller

W-401M.02.05 Pipe Joints

W-401M.02.05A Flanged Joint

Flanged joints for ductile iron pipe shall be in conformance with AWWA C115 (ANSI A21.15). Gaskets shall be 1/8-inch thick rubber, either ring or full face, conforming to the pipe manufacturer's requirements. Bolts and nuts shall be low carbon steel conforming to ASTM A307, Grade B. Bolts and nuts shall be zinc plated.

W-401M.02.05B Mechanical Joints

All components of mechanical joints shall be in conformance with AWWA C111 (ANSI A21.11) except bolts shall be low alloy steel. High strength cast iron bolts (HSCI) are specifically excluded. Unless otherwise specified, gaskets and glands shall be provided by the manufacturer supplying the pipe or fitting on which they are to be used.

W-401M.02.05C Push-on Joints

Single rubber gasket push-on joints shall conform to AWWA C111 (ANSI A21.11) or AWWA C900 as applicable. Unless otherwise specified, gaskets and lubricant shall be provided by the manufacturer of the pipe or fitting on which they are to be used.

W-401M.02.05D Solvent Weld

Schedule 40 PVC pipe fittings shall be solvent welded using primer and heavy bodied PVC cement according to the manufacturer specifications.

W-401M.02.06 Valves and Accessories

W-401M.02.06A Resilient-Seated Gate Valves

Resilient-seated gate valves shall meet or exceed the provisions of AWWA C509 and shall be a nonmetallic seat, non-rising stem type with O-ring seals and a 2-inch square operating nut which opens the valve when turned counter clockwise. With the valve fully open, an unobstructed waterway not less than the full nominal diameter of the valve shall be provided. Valves shall have joint ends as specified on the Plans.

Acceptable resilient-seated gate valves:

Kennedy "Ken-Seal" 7000	M & H	Mueller
Waterous "Series 2500"		

W-401M.02.06B Butterfly Valves

Butterfly valves shall meet or exceed the provisions of AWWA C504 Class 150B. Butterfly valves shall be short bodied, cast iron construction with joint ends as specified on the Plans. All valves shall be of the tight-closing type with two-way thrust bearing and shall be equipped with a 2-inch square operating nut which opens the valve when turned counterclockwise.

Acceptable butterfly valves:

Pratt "Ground Hog"	M & H 4500	Mueller "Lineseal III"

W-401M.02.06C Valve Operator Extensions

The valve operator extension shall be constructed as shown on SUB Water Division Standard Drawing W1.18. The valve wrench cup and operating nut shall be attached to the ends in such a manner as to withstand without damage an input torque of 300 foot-pounds.

W-401M.02.06D Adjustable Valve Boxes

W-401M.02.06D1 Valve Box Lids

Valve box lids shall be constructed of cast iron per SUB Water Division Standard Drawing W1.16 with "Water" cast into it. Valve box lids shall be cleaned after manufacture and painted blue prior to shipment.

Acceptable valve box lids:

Silverton Foundry Union Foundry

W-401M.02.06D2 Valve Box Ring

Valve box ring for use in concrete structures shall be constructed of cast iron per SUB Water Division Standard Drawing W1.16. Dimensions to accept W-401M.02.05D1 valve box lid.

Acceptable valve box ring:

Silverton Foundry

W-401M.02.06D3 Valve Box Insert

Valve box insert shall be constructed from rolled 20 gauge galvanized steel sheet metal per Water Division Standard Drawing W1.16.

Acceptable valve box insert:

Brainard Sheet Metal, Springfield
Smith Sheet Metal, Springfield
Elliots Sheet Metal, Eugene

W-401M.02.06D4 Valve Box Riser

Valve box riser shall be an 8 inch ASTM 3034 PVC pipe.

Acceptable valve riser pipe:

North American Pipe Corporation (NAPCO) JM Eagle
CertainTeed Diamond Plastics Corp. Crestline

W-401M.02.07 Thrust Restraint

W-401M.02.07A Mechanical Joint Restraint Devices

Mechanical joint restraint systems shall be incorporated in the design of the follower gland or gasket and may include a restraining ring which, when actuated by a wedging action with the gland, imparts a restraining force against the pipe that increases as the pressure increases or be completely integral to the gasket. Glands shall be manufactured of ductile iron meeting ASTM A 536. Dimensions of the gland shall be such that it can be used with the standard mechanical joint bell, gasket, and tee-head bolts in accordance with ANSI/AWWA C110/A21.10, ANSI/AWWA C111/A21.11, and ANSI/AWWA C153/A21.53 or the latest revision.

The mechanical joint restraint device shall have a working pressure of at least 250 psi with a minimum safety factor of 2:1. The restraining system shall be rated in accordance with the performance requirements of ANSI/AWWA C111/A21.11.

Acceptable restraint devices:

For Ductile Iron

EBAA	Megalug	Romac	Grip Ring
Romac	RomaGrip	Tyler/Union	MJ Field LOK
Tyler	Tuff Grip		

W-401M.02.07B Weldment Ring Restraint Joint

Weldment ring restraint joints shall restrain the spigot end of the pipeline by use of restraining wedges that bear on a weldment ring shop welded to the spigot end of the pipe wall that restrains the joint even with joint deflection.

The weldment ring joint restraint device shall have a working pressure of at least 250 psi with a minimum safety factor of 2:1.

Acceptable pipe joint types are:

U.S. Pipe TR-Flex Pacific States Thrust-Lock

American Flex-Ring

W-401M.02.07C Push-On-Joint Restraining Gaskets

Push-on joint restraining gaskets shall be provided by the manufacturer of the pipe being used. In no case are push-on joint gaskets to be used that are not provided by the pipe manufacture or approved in writing by the pipe manufacturer. All gasket materials shall be standard SBR which meets all the material requirements of ANSI/AWWA C111/A21.11. Gaskets provided shall be designed to meet or exceed the pressure rating indicated on the plans and shall have been tested at twice the designated working pressure of the pipe being used.

The restraint provided by the gasket shall be by the development of wedging action between pairs of high-strength stainless steel elements spaced around the gasket. The outer metal element acts as a bearing member for the wedge-shaped inner element, which has sharp teeth on its inner surface for gripping the spigot. The force between the spigot and the socket of the joint shall be essentially constant at any given pressure thrust regardless of the "tightness" or "looseness" of the joint fit or the joint deflection.

Acceptable push-on joint restraining gaskets:

American	U.S. Pipe	Pacific States

W-401M.02.08 Polyethylene Meter Boxes

Polyethylene meter boxes shall be one piece, molded construction. All edges shall be clean and smooth for safe handling. Covers shall be one piece, solid or with reader lid with dimensions appropriate for the meter box size, made of ductile iron.

Acceptable polyethylene meter boxes:

Mid-States Plastics, BC and BCF models
Armorcast Rotocast Boxes (not polyethelene)
Raven

W-401M.03 CONSTRUCTION/WORKMANSHIP

W-401M.03.01 Progress of Construction

It is intended that the progress of the work shall be completed in a systematic manner so that as little inconvenience as possible will result to the public in the course of construction. It is necessary, therefore, that the Contractor confine his operation to as small a length of work per crew as is feasible. The length of trench excavated in advance of the pipe laying shall be kept to a minimum and in no case shall the trench be left open overnight unless otherwise authorized by the Engineer. Complete back fill and cleanup shall progress as each section of pipe has been inspected and approved.

W-401M.03.02 Transporting and Handling of Materials

Every effort shall be made to ensure that all pipe, fittings, valves, hydrants, and other appurtenances are protected against damage during transport and that they are loaded and unloaded in such a manner as to avoid shock or damage. Under no circumstances shall such materials be dropped. Minor damage which may occur to materials shall, at the Contractor's option and with the Engineer's approval, be repaired by the Contractor in a manner satisfactory to the Engineer. Any material that the Contractor elects not to repair, or that in the judgment of the Engineer is damaged beyond repair, shall be removed from the job site. No payment will be made for any damaged material removed from the job site or for any cost incurred in the repair or removal of damaged materials.

W-401M.03.03 Storage of Materials

The Contractor shall be responsible for the safe storage of material furnished by or to him, accepted by him, and intended for use in the construction until it has been incorporated in the completed project.

Materials shall be stored to assure preservation of their quality and fitness for the work. Pipe, fittings, valves, and hydrants shall be drained and stored in such a manner as to prevent water from collecting and pooling in them so as to protect them from damage by freezing and shall be kept free from dirt and other foreign matter at all times. Stored materials, even though approved before storage, may again be inspected prior to their use in the work and shall be located so as to facilitate their prompt re-inspection.

Stored pipe shall be stacked on timbers off of the ground and timbers shall be placed between tiers and chocks nailed at each end to prevent movement of the pipe. The number of tiers stacked shall not exceed the manufacturer’s suggested maximum allowable heights.

Portions of the right-of-way approved by the Engineer may be used for storage purposes. Any additional space required shall be provided by the Contractor at his own expense. Private property shall not be used for storage purposes without written permission of the property owner. Copies of such written permission shall be furnished to the Engineer.

W-401M.03.04 Distribution of Materials

Materials shall be distributed along the proposed water line route no faster than can be installed in one day's work unless otherwise authorized by the Engineer. Materials distributed and not installed within a reasonable amount of time as determined by the Engineer shall be collected and properly stored by the Contractor at no extra cost until he is ready to proceed with the work.

Materials shall be distributed in such manner as not to be damaged in the process and shall under no circumstances be dragged along the ground. Due consideration shall be given to the occupants of adjoining property, pedestrians, and vehicular traffic to assure no hazard will be presented.

W-401M.03.05 Placing of Materials in the Trench

All pipe, fittings, and hydrants shall be lowered into the trench in such a manner as to prevent damage. Prior to lowering materials into the trench, the Contractor shall check for damage and shall either repair or reject any damaged materials. All repair work shall be completed to the satisfaction of the Engineer prior to placing the material in the trench.

Every precaution shall be taken to prevent foreign material from entering the pipe while it is being placed in the trench. If it is not possible to place the pipe in the trench and into position without getting earth into it, the Engineer may require that a suitable plug be placed in each end of the pipe before lowering it into the trench and left in place until the connection is made to the adjacent pipe. Debris, tools, rags, and other materials shall be kept out of the pipes at all times.

Pipe shall be laid and joined one length at a time to the required line and grade. Pipe shall be placed with the bell end facing the direction of laying except for lines on a grade in excess of 15 percent, in which case, bells shall, at the direction of the Engineer, face upgrade. No pipe shall be laid when standing water exists in the trench or when trench conditions are otherwise unsuitable in the opinion of the Engineer.

W-401M.03.05A Tracer Wire

All water mains and services shall have an electrically conductive tracer installed in the trench for locating the pipe in the future. The tracer wire shall be located in the bottom of the trench next to the pipe and run the full length of the installed pipe with each end clearly visible and able to be extended 12 inches above ground in each valve box and meter box. The tracer shall be spliced into the existing tracer wire at water main connection locations in accordance with SUB Water Division Standard Drawing W1.16.

W-401M.03.06 Sanitary Practices During Installation

All lumps, blisters, and excess coal tar coating shall be removed from the bell and spigot end of each pipe prior to installation. The outside of the spigot and the inside of the pipe shall be clean and dry and free from all foreign matter before the pipe is laid. If, in the opinion of the Engineer, the pipe contains dirt or other foreign matter that will not be removed during the flushing operation, the interior of the pipe shall be swabbed or otherwise cleaned as necessary to remove the contaminants.

Whenever the trench site is left unattended, the open ends of the pipe shall be sealed with a water tight plug or cap to prevent trench water, animals, and foreign matter from entering the pipe. This shall apply during the noon hour, as well as overnight. If there is water in the trench, the seal shall remain in place as long as the water would otherwise be able to enter the pipe. Appropriate backfill and other actions must be taken to keep the pipe from floating up and off of grade or alignment.

W-401M.03.07 Cutting

The cutting of pipe for inserting valves, fittings, or closure pieces shall be done in such a manner as to prevent damage to the pipe or cement lining and so as to leave a smooth end at right angles to the axis of the pipe. The cut end of the pipe shall be ground smooth and, for push-on joint connections, shall be beveled in order to remove sharp edges which may damage the gasket. Any lining or coating damaged in the cutting process shall be repaired by the Contractor to the satisfaction of the Engineer.

W-401M.03.08 Allowable Deflection at Joints

When push-on or mechanical joint pipe is to be laid on a curve, either in the horizontal or vertical plane, the amount of deflection shall not exceed the maximum limits given in Table I below for each type of pipe joint or as recommended by the manufacturer. Where pipe lines are intended to be laid in a straight line, the deviation from the Plans for each section of pipe shall not be in excess of 0.2 feet for line and 0.1 feet for grade.

W-401M.03.09 Jointing

All jointing procedures shall be in strict accordance with the manufacturer's recommendations and as approved by the Engineer. The Contractor shall provide any special tools and equipment necessary for the installation.

The following are given as general guidelines for each type of joint:

TABLE I MAXIMUM DEFLECTION 18 FOOT DUCTILE IRON PIPE LENGTH				
PUSH-ON TYPE JOINT			MECHANICAL JOINT	
PIPE DIAMETER	DEFLECTION ANGLE (Degree)	MAXIMUM DEFLECTION (Inch)	DEFLECTION ANGLE (Degree)	MAXIMUM DEFLECTION (Inch)
3	5	19	8	31
4	5	19	8	31
6	5	19	7	27
8	5	19	5	20
10	5	19	5	20
12	5	19	5	20
14	3	11	3.5	13.5
16	3	11	3.5	13.5
18	3	11	3	11
20	3	11	3	11
24	3	11	2	9
30	3	11	2	9
36	2	7.2	2	8
42	2	7.2	2	7.2
48	2	7.2	2	7.2

W-401M.03.09A Flanged Joints

Contact faces and gaskets for flanged connections shall be free of all foreign matter before the connection is made. Flanged joints shall be fitted so that the contact faces bear uniformly on the gasket and then completed by tightening the bolts uniformly. Cast flanges and flanged fittings shall be properly anchored, supported, or restrained after installation to prevent breakage, and care shall be taken to prevent bending or torsional strains from being applied during the jointing procedure.

W-401M.03.09B Mechanical Joints

After assuring that all joining surfaces are free from foreign matter, the pipe shall be inserted in the socket and the gasket pressed firmly and evenly into the gasket recess while keeping the joint straight. Bolts shall be tightened so that the gland is brought up evenly toward the pipe flange with the spigot and centrally located in the bell. The normal range of bolt torques for various sizes of bolts shall be given below. Over stressing of bolts to compensate for ineffective sealing or poor installation practice shall be unacceptable. Any required deflection of joints shall be made after the joint is assembled, but before final tightening of the bolts.

BOLT DIAMETER (inches)	TORQUE RANGE (foot-pound)
5/8	45-60
3/4	75-90
1	100-120
1-1/8-3	120-150

W-401M.03.09C Push-on Joint

The plain end of the pipe for push-on joint connections shall be beveled before proceeding with the jointing operation. The plain end shall then be lubricated after dirt and foreign material has been removed from all jointing surfaces and the gasket has been installed in the bell end. The joint shall be kept straight while pushing the plain end into the bell of the pipe with any required deflection being made after the joint is assembled.

W-401M.03.09D Screwed Joints

Screwed joint connections shall be made after all threaded surfaces have been thoroughly cleaned and prepared with approved Teflon sealing paste.

W-401M.03.09E Solvent Weld

Solvent weld connections shall be made after both plain end and socket surfaces have been thoroughly cleaned and are dry. Apply primer to both surfaces according to manufacturer specifications. Apply solvent cement evenly to both surfaces, taking care to not over apply or cause excess solvent cement to run into the pipe or fittings and in accordance with the manufacturers specifications. The joint shall be kept straight while pushing the plain end into the fitting socket. Turn one-fourth turn and hold firmly in place to keep pipe from pushing out until the joint is set. Joint set is dependent on weather conditions. Any push-out of the joint is unacceptable.

W-401M.03.10 Assemblies

All valves, fittings, and other details and appurtenances shall be installed as shown in the applicable SUB Water Division Standard Drawing at the locations indicated on the Plans or as otherwise directed by the Engineer.

W-401M.03.10A Meter Boxes

Approved water meter boxes shall be provided at every water service assembly at the locations shown on the plans in accordance with SUB Water Division Standard Drawing W1.00, or as directed by the Engineer. Each meter box shall be set on 4 inches of compacted 3/4 inch crushed aggregate at an elevation that places the top of the meter box cover flush with the proposed grade as specified.

When set in a concrete collar, as directed by the Engineer, meter box installations shall be in accordance with SUB Water Division Standard Drawing W1.16.1.

W-401M.03.10B Valves and Valve Tiles

Valves shall be set and joined to the pipe in the manner previously specified for cleaning, laying, and jointing pipe. Valves shall be provided with compacted crushed stone or a precast concrete pad set on the undisturbed earth for support so that the pipe will not be required to support the weight of the valve.

The valve shall be operated from the fully open to fully closed position to assure that the valve does not bind during operation. The area around valves shall be back filled in the same manner as specified for the adjoining pipe.

When set in sidewalk, undeveloped and/or concrete streets, or as directed by the Engineer valve tiles shall have a cast iron valve tile ring centered on the valve tile, flush with the finish grade, set before the placing of concrete around the box. All concrete shall be removed from the void space between the valve tile lid and the valve tile ring prior to the concrete setting.

When set in a concrete collar, as directed by the Engineer, valve tile and valve tile ring installations shall be in accordance with SUB Water Division Standard Drawing W1.16.1.

A valve tile shall be provided for every valve and shall be installed as shown in SUB Water Division Standard Drawing W1.16. The valve box shall be centered along the axis of the operating nut of the valve and shall be set plumb so as not to transmit shock or stress to the valve or valve operator. The exposed end of the valve tiles shall remain accessible at all times. The Contractor shall be responsible for keeping the valve tile free of rocks and other debris for the duration of the project. Any misalignment or necessary readjustment of valve boxes shall be corrected by the Contractor at no additional cost to the Owner.

A valve operator extension shall be provided for every valve where the operating nut is in excess of 5 feet from finished grade. The extension shall be of such length that its operating nut in place is within 1 to 2 feet of finished grade. The valve operator extension shall be constructed as shown on SUB Water Division Standard Drawing W1.18. The cost of furnishing and installing valve operator extensions shall be considered incidental to and included in the cost of other bid items, and no additional payment shall be made.

W-401M.03.10C Fittings

Fittings shall be set and joined to the pipe in the manner previously specified for cleaning, laying, and jointing pipe.

All plugs, caps, tees, reducers, and bends deflecting 11 1/4 degrees or more on mains 4 inches in diameter or larger shall be securely anchored as indicated on the Plans, and as shown in SUB Water Division Standard Drawing W1.26, by thrust blocking and/or joint restraint to prevent movement due to thrust. No concrete shall touch pipe or fittings.

All cast and ductile fitting bolt assemblies shall be completely wrapped with 6 ML polyethylene sheeting and taped with approved PE tape to exclude cement containing backfill material and aid in corrosion control.

W-401M.03.10D Dead-end Mains and Flush Points

All dead ends on new mains shall be closed with cast iron plugs or caps and a minimum 2-inch flush point assembly in conformance with SUB Water Division Standard Drawing W1.13.3. The plugged or capped pipe length shall be the specified number of restrained joint pipe lengths with approved field-lock gaskets or restrained pipe joints as supplied by the pipe manufacturer and approved by the Engineer. The flush point pipe shall extend to within 6 inches of finished grade. Access to the flush point pipe shall be provided by a meter box kept free of rocks and debris at all times and installed such that the lid is flush with finished grade. For installations a solid cast iron meter box cover shall be supplied. The meter box may be set against the back of the curb; however, no other portion of the meter box shall be within 6 inches of the edge of any sidewalk or driveway apron.

W-401M.03.11 Deviations From Plans

Wherever obstructions not shown on the Plans are encountered during the progress of the work and interfere to such an extent that an alteration of the Plan is required, the Engineer shall have the authority to change the Plans and order a deviation from the line and grade, or take other such action as necessary to avoid the conflict. If the change in Plans results in a change in the amount of work by the Contractor, such altered work shall be done on the basis of payment to the Contractor for extra work or credit to the Owner for less work.

W-401M.03.12 Filling the Main

Water mains shall be filled under the direction of the Engineer in such a manner as to prevent excessive pressure reductions in the existing main and water hammer.

W-401M.03.13 Flushing

Prior to chlorination, the main shall receive a complete flushing through all hydrants and blow-offs such that a velocity of at least 2.5 feet per second is developed in the main. This flushing shall be accomplished during prearranged times under direction and supervision of the Engineer. If sufficient outlets are not available, a tap shall be provided large enough to develop the required velocity in the main and to allow the removal of foam swabbing "pigs". (see Table II)

All valves shall be operated through their extreme open and closed positions during flushing. Each hydrant shall be inspected after flushing to see that the entire valve operating mechanism is in good condition.

Flushing water onto the street subgrade shall not be allowed at any time. Provisions for the dechlorination and disposal of the water onto areas where no damage will be caused shall be made by the Contractor prior to any flushing operations. All flushing shall meet current regulatory requirements. Rate of operation of all valves and hydrants shall be done in a manner that avoids water hammer damage to the existing system and the improvements.

TABLE II
REQUIRED OPENINGS FOR 2.5 fps FLUSHING VELOCITY
(40 psi Pressure)

PIPE SIZE (inch)	FLOW (gpm)	ORIFICE SIZE (inch)	HYDRANT OUTLET NOZZLES
			Amount/Diameter (inches)
4	100	15/16	One 2-1/2
6	220	1-3/8	One 2-1/2
8	390	1-7/8	One 2-1/2
10	610	2-5/16	One 2-1/2
12	880	2-13/16	One 2-1/2
14	1200	3-1/4	Two 2-1/2
16	1565	3-5/8	Two 2-1/2
18	1908	4-3/16	Two 2-1/2
20	2450	4-5/8	Three 2-1/2
24	3510	5-9/16	Four 2-1/2 or One 4-1/2 and One 2-1/2
30	5500	7	Five 2-1/2 or One 4-1/2 and Two 2-1/2 or Two 4-1/2

W-401M.03.14 Sterilization

Before being placed in service, all new mains, repaired portions of existing mains, or extensions to existing mains shall be sterilized by chlorination in conformance with AWWA C651. A chlorine dosage rate of 50 mg/L shall be applied. The contractor shall furnish all equipment, labor and materials required for testing and sterilizing the potable water pipe. Water for testing and sterilizing will be furnished by the Owner from locations approved by the owner. All chlorine dosages, chlorinating, and testing operations shall be approved by, and done in the presence of, the Owner Representative.

Chlorination shall be performed in such a manner as to prevent heavily chlorinated water from back flowing into SUB's potable water systems. All valves shall be operated through their extreme open and closed positions during chlorination. A chlorine residual of not less than 10 ppm shall remain in the water at all points after 24 hours standing in the pipe. Records of all chlorine applications and sampling shall be provided to Engineer by Contractor.

W-401M.03.14A Dechlorination

The Contractor shall be responsible for dechlorinating the water used for sterilization prior to discharging to the environment. Oregon DEQ rules prohibit discharge of super chlorinated water (greater than 3 mg/l total residual chlorine) to surface water or storm sewers. The Contractor shall confirm current regulations prior to commencing work. Non-discharge alternatives may be required. These include discharge to sanitary sewers, land disposal, or irrigation. Table III is provided to assist the contractor in determining the amount of chemical to use in neutralizing chlorine concentrations prior to disposal. The Contractor may also refer to AWWA C651 Appendix B, Disposal of Heavily Chlorinated Water.

TABLE III
Pounds of Chemicals Required to Neutralize Various Residual Chlorine Concentrations in 100,000 gal of Water*

Residual Chlorine Concentration mg/L	Vita-D-Chlor** (Ascorbic Acid)	SodiumThiosulfate ($Na_2S_2O_35H_2O$)
1	2.2	1.2
2	4.41	2.4
10	22.03	12.0
50	110.13	60.0

* Except for residual chlorine concentration, all amounts are in pounds.

*Check with local sewer department for conditions of disposal to sanitary sewer.

**Formula for Vita-D-Chlor application: (D x D x mg/l x feet) ÷ 1,112,300. Where D= pipe diameter in inches, mg/l = milligrams per liter chlorine concentration, feet = number of feet of line to be treated.

W-401M.03.15 Tapping Existing Mains

All taps to be made in existing mains shall be performed exclusively by the Springfield Utility Board upon being given at least 10 working days notice.

W-401M.03.16 Operation of Existing Valves

Operation of existing valves to shut down any portions of the main shall be performed exclusively by the Springfield Utility Board upon being given at least 2 working days notice.

W-401M.04 Testing

W-401M.04.01 Hydrostatic Testing

W-401M.04.01A Pressure Testing

Hydrostatic pressure tests shall be made on any valved section of all newly laid main and service pipe in the presence of the Engineer, unless otherwise directed by the Engineer. Reference specifications, AWWA C600 Section 5.2, Hydrostatic Testing. All entrained air shall be expelled from the line prior to elevating the internal pressure to the specified test pressure. The test pressure shall be 150 psi calculated for the point of highest elevation, but shall not exceed 200 psi at any point. The test pressure shall be applied and maintained for a two-hour duration unless otherwise specified by the Engineer. Concrete

thrust blocking required for any reach of pipe shall be allowed a minimum of three days cure time prior to pressure testing.

W-401M.04.01B Leakage Testing

A leakage test shall be conducted concurrently with the pressure test. SUB shall furnish the pressure gauge, and the Contractor shall furnish the pump, pipe, connections, and all other necessary apparatus and shall conduct the test. Testing shall be against closed hydrants with hydrant valves open. In addition, the test shall include the service installation against the closed angle meter valve with the corporation stop open. Test pressure shall not vary by more than 5 psi for the duration of the test. Leakage shall be defined as the quantity of water necessary to maintain the specified test pressure to the end of the test period. Leakage shall not exceed the number of gallons per hour as determined by the following formula:

$$Q = \frac{LD\sqrt{P}}{148{,}000}$$

Q = Quantity of makeup water in gallons per hour

L = Length of pipe tested (in feet)

D = Nominal diameter of the mainline pipe in inches

P = Average test pressure during the leakage test in psi

The allowable leakage at various pressures for pipe of various diameters is shown in Table 6 below from AWWA C600.

AWWA C600

TABLE 6 Allowable Leakage per 1000 ft (305 m) of Pipeline*--gph

NOMINAL PIPE DIAMETER -- (inches)																
Avg. Test Pressure psi (bar)	3	4	6	8	10	12	14	16	18	20	24	30	36	42	48	54
200 (14)	0.32	0.43	0.64	0.85	1.06	1.28	1.48	1.70	1.91	2.12	2.55	3.19	3.82	4.46	5.09	5.73
175 (12)	0.30	0.40	0.59	0.80	0.99	1.19	1.39	1.59	1.79	1.98	2.38	2.98	3.58	4.17	4.77	5.36
150 (10)	0.28	0.37	0.55	0.74	0.92	1.10	1.29	1.47	1.66	1.84	2.21	2.76	3.31	3.86	4.41	4.97
125 (9)	0.25	0.34	0.50	0.67	0.84	1.01	1.18	1.34	1.51	1.68	2.01	2.52	3.02	3.53	4.03	4.53
100 (7)	0.23	0.30	0.45	0.60	0.75	0.90	1.05	1.20	1.35	1.50	1.80	2.25	2.70	3.15	3.60	4.05

*If the pipeline under test contains sections of various diameters, the allowable leakage will be the sum of the computed leakage for each size.

All visible leaks are to be repaired, regardless of the amount of leakage.

No payment will be made on any section or reach of pipe deemed unacceptable due to excessive leakage or other defects until such leakage and defects have been corrected. Any cracked or defective pipes, fittings, valves, or hydrants shall be removed and replaced by the Contractor with sound material, and the tests shall be repeated until satisfactory to the Engineer.

W-401M.04.02 Bacteriological Testing

After final flushing and before the new water main is connected to the distribution system, two consecutive sets of acceptable samples, taken 24 hours apart, shall be collected from the new main. Chlorine residual shall be tested before sampling and must be 1 ppm or less before the sample is collected. At least one set of samples shall be collected from every 1200 feet (366 m) of the new water main, plus one set from the end of the line and at least one set from each branch. All samples shall be tested for bacteriological quality in accordance with Standard Methods for the Examination of Water and Wastewater, by an Oregon State Health Division approved laboratory, and shall show the absence of coliform organisms. A standard heterotrophic plate count may be required at the option of the Engineer.

If trench water has entered the new main during construction or, if in the opinion of the Engineer excessive quantities of dirt or debris have entered the new main, bacteriological samples shall be taken at intervals of approximately 200 feet and shall be identified by location. Samples shall be taken of water that has stood in the new main for at least 16 hours after final flushing has been completed.

Samples for bacteriological analysis shall be collected in sterile bottles treated with sodium thiosulfate as required by *Standard Methods for the Examination of Water and Wastewater*. No hose or fire hydrant shall be used in the collection of samples.

Should the initial treatment fail to result in the specified conditions, the original chlorination procedure or another method approved by SUB shall be repeated at the Contractor's expense until satisfactory results are obtained. No extra payment or extension of Contract time will be allowed the Contractor for the time elapsed to achieve acceptable sterilization of the pipe. Records of all bacteriologic testing shall be provided to Engineer by the Contractor.

W-401M.04.03 Conductivity Testing

A conductivity test shall be made on all tracer wire installed. Test reports shall be provided to SUB and a visual inspection shall be made, by SUB, at each valve and meter box. Conductivity may be tested by using an electrical conductivity meter or by attaching underground locating equipment and tracing the signal to each valve box and meter box. No acceptance or payment will be made on any section or reach of pipe installed that does not have a conductive electrical locator wire installed in accordance with standard details.

W-401M.05 Duties and Authority of Inspectors

Failure of the Inspector or Engineer to call the attention of the Contractor to faulty work or infringements upon Plans or Specifications shall not constitute acceptance of said work.

Inspectors have the authority to:

a) Inspect all work done and materials furnished including preparation, fabrication, or manufacture of materials to be used;

b) Report to the Engineer about the progress of the work and the manner it is performed;

c) Report to the Engineer and notify the Contractor when materials furnished or work performed by the Contractor fail to meet the requirements of the plans and specifications.

d) Additional authority that may be delegated by the Engineer or Owner.

W-401M.06 Inspection

The Contractor shall allow the Engineer every reasonable facility necessary to obtain information about type and quality of materials used in the work, methods used to complete the work, and progress of the work. The Engineer and the inspector shall be allowed access to all parts of the work to ascertain whether or not the work is performed in accordance with the requirements and intent of the Contract. Full time inspection is not required; however, the Contractor shall notify SUB Water Division at least 2 hours prior to burial of any water or electric appurtenance for the purposes of inspection. No SUB facilities are permitted to be buried or covered prior to inspection.

The Contractor shall furnish, at no expense to the Owner, samples required for testing purposes. The Contractor shall, at any time before final acceptance of the work, remove or uncover portions of the work as directed by the Engineer. The Contractor shall restore the portions of the work to the standard required by the Contract. If the exposed work is acceptable, the uncovering and restoring of the work will be paid for as extra work. If the exposed work is unacceptable, the uncovering and restoring of the work shall be at the expense of the Contractor. Any work done or materials used without approval of the Engineer may be ordered removed and replaced at no expense to the Owner.

When the work affects or may affect property of any other unit of government, political subdivision, utility, or railroad corporation, representatives of that organization shall have the right to inspect the work. Such inspection shall not make any other unit of government, political subdivision, utility, or any railroad corporation a party to the Contract and shall not interfere with the rights of the parties of the Contract.

W-401M.07 Incidentals

The cost of incidental items, including but not limited to: concrete, tie rods, and mechanical joint restraint devices for thrust restraint; extra bolts and nuts as may be necessary for jointing operations; special equipment required for any installation; or any other costs incurred on the project not listed in Section B as pay items shall, unless otherwise specified, be considered as incidental to the construction and included in other bid items, and no extra payment will be made.

STANDARD DRAWINGS

The following standard drawings are supplied as a reference to the requirements in specifications for the FOR W.O.# 13947, McVAY HIGHWAY TRANSMISSION LINE PROJECT. Any standard drawing referenced above, but not included in the following may be viewed at:

Water Division Standards: http://www.subutil.com/water_service/standards

Electric Division Standards: http://www.subutil.com/electric_service/developer_standards

PLANS

CITY OF SPRINGFIELD, OREGON

FRANKLIN/McVAY SANITARY SEWER EXTENSION

PROJECT NUMBER P21080

MAY 2014

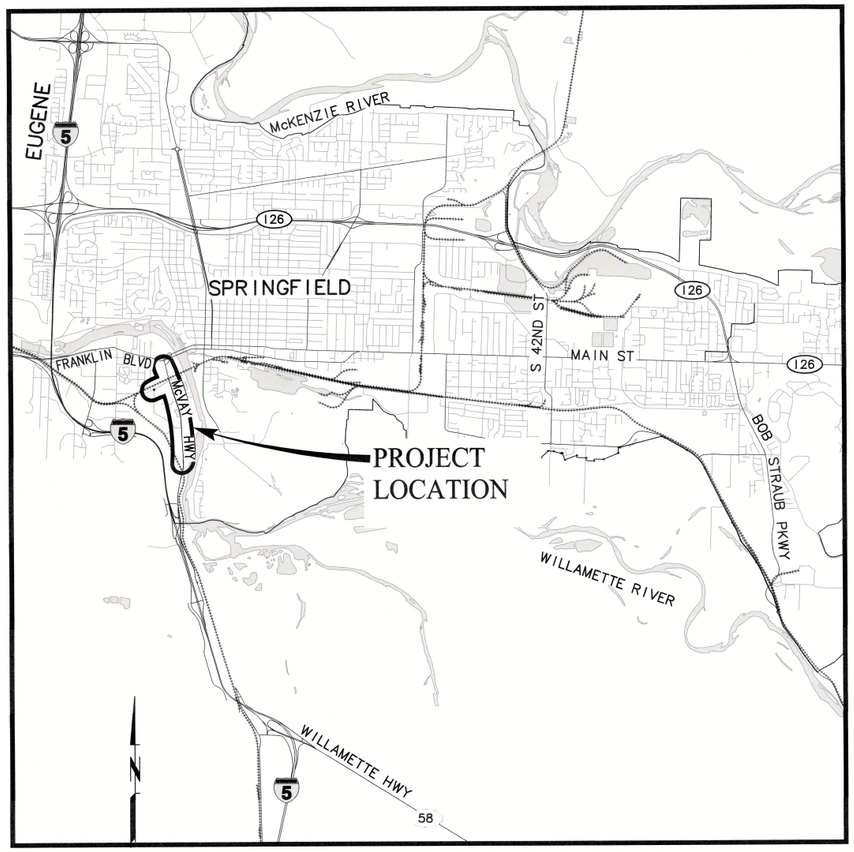

VICINITY MAP

SCALE: 1"=3,500'

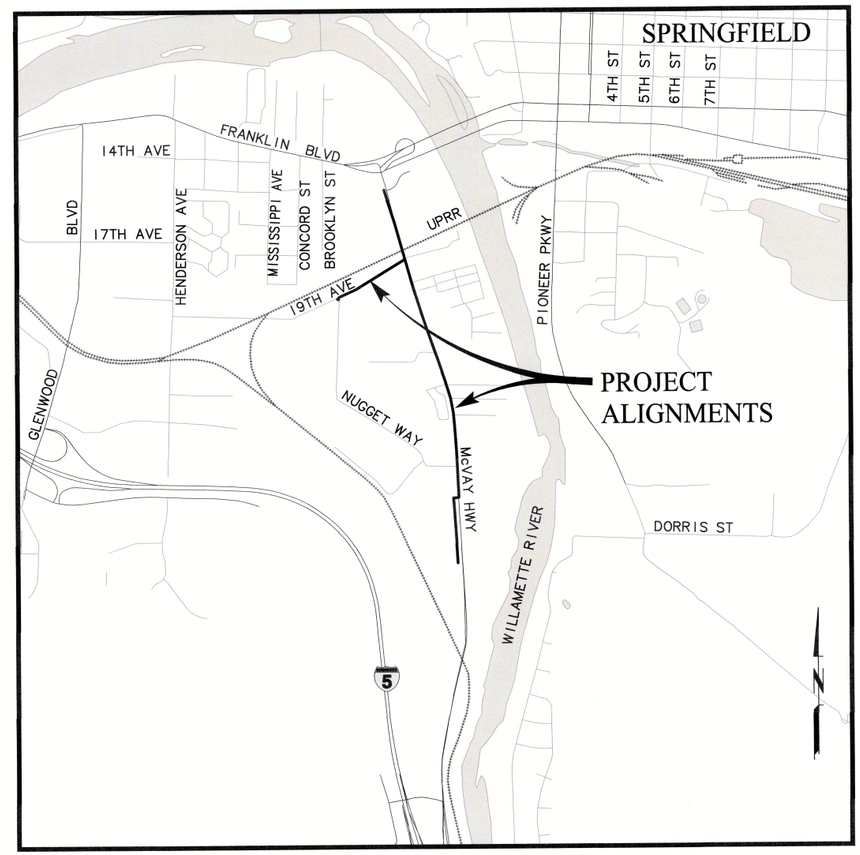

LOCATION MAP

SCALE: 1"=800'

CITY PROJECT NUMBER P21080

NO.	DATE	REVISION	BY

DESIGNED: SMG
DRAWN: DAK
CHECKED: WSE
APPROVED: WHH

REGISTERED PROFESSIONAL ENGINEER 17140 OREGON MAY 11, 1988 SUSAN M. GREGERSEN
RENEWS 12-31-14

SCALE VERT: AS SHOWN HORIZ: AS SHOWN
NOTICE 0 1 IF THIS BAR DOES NOT MEASURE 1" THEN DRAWING IS NOT TO SCALE

PROJECT NAME: CITY OF SPRINGFIELD, OREGON FRANKLIN/McVAY SANITARY SEWER EXTENSION PROJECT NUMBER P21080

SHEET TITLE: COVER SHEET, VICINITY MAP & LOCATION MAP

MSA Murray, Smith & Associates, Inc. Engineers/Planners
121 S.W. Salmon, Suite 900 Portland, Oregon 97204
PHONE 503-225-9010 FAX 503-225-9022

MSA PROJECT: 13-1469.201 DATE: MAY 2014

G:\PDX_Projects\13\1469\CAD\SHEETS\13-1469-202-OR-G.dwg G-1 4/29/2014 3:11 PM DKT 18.2s (LMS Tech)

INDEX OF SHEETS

GENERAL

1	G-1	COVER SHEET, VICINITY MAP & LOCATION MAP
2	G-2	INDEX OF DRAWINGS, SURVEY CONTROL & DRAWING KEY MAP
3	G-3	SYMBOLS, LEGEND & ABBREVIATIONS
4	G-4	GENERAL NOTES
5	G-5	EROSION CONTROL NOTES & DETAILS

TRAFFIC CONTROL

6	6	TEMPORARY TRAFFIC CONTROL DETAILS
7	7	STAGE I CONSTRUCTION TEMPORARY TRAFFIC CONTROL DETOUR
8	8	STAGE II CONSTRUCTION TEMPORARY TRAFFIC CONTROL DETOUR
9	9	STAGE III & IV CONSTRUCTION TEMPORARY TRAFFIC CONTROL DETOUR

CIVIL – FRANKLIN/McVAY SEWER EXTENSION

10	C-1	PLAN AND PROFILE – STA 1+00 TO STA 5+00
11	C-2	PLAN AND PROFILE – STA 5+00 TO STA 10+20
12	C-3	PLAN AND PROFILE – STA 10+20 TO STA 15+40
13	C-4	PLAN AND PROFILE – STA 15+40 TO STA 20+00
14	C-5	PLAN AND PROFILE – STA 20+00 TO STA 24+60
15	C-6	PLAN AND PROFILE – STA 24+60 TO STA 29+20
16	C-7	PLAN AND PROFILE – STA 29+20 TO STA 33+80
17	C-8	PLAN AND PROFILE – STA 33+80 TO STA 38+40
18	C-9	PLAN AND PROFILE – STA 38+40 TO STA 41+80

CIVIL – SW 19TH AVENUE SEWER MAIN

19	C-10	PLAN AND PROFILE – STA A0+00 TO STA A4+80
20	C-11	PLAN AND PROFILE – STA A4+80 TO STA A9+33
21	C-12	NUGGET WAY PUMP STATION SITE PLAN & DETAILS
22	C-13	NUGGET WAY PUMP STATION GENERAL DETAILS

CIVIL – FRANKLIN/McVAY WATERLINE

23	W-1	FRANKLIN BLVD. (McVAY HWY) UPRR TRESTLE CROSSING CONTRACTOR CONSTRUCTED WATER AND ELECTRIC FACILITIES

DETAILS

24	D-1	MISCELLANEOUS SEWER DETAILS
25	D-2	MISCELLANEOUS SEWER DETAILS
26	D-3	MISCELLANEOUS DETAILS
27	D-4	MISCELLANEOUS DETAILS
28	D-5	SIDEWALK AT UPRR CROSSING

ELECTRICAL

29	E-1	ELECTRICAL DETAILS
30	E-2	ELECTRICAL SCHEMATICS

SURVEY CONTROL POINT SCHEDULE

POINT #	NORTHING	EASTING	ELEVATION	DESCRIPTION
CP-3	876628.31	4255971.65	446.68	1" BRASS BUTTON
CP-4	875603.89	4256268.06	441.66	1" BRASS BUTTON
CP-10	873003.35	4256769.16	448.38	MAG NAIL & WASHER
CP-12	874164.40	4256694.10	447.05	MAG NAIL & WASHER
CP-500	876459.33	4255983.65	445.58	MAG NAIL & WASHER
CP-501	876004.89	4256114.70	444.32	MAG NAIL & WASHER
CP-550	875082.56	4256422.99	446.58	MAG NAIL & WASHER

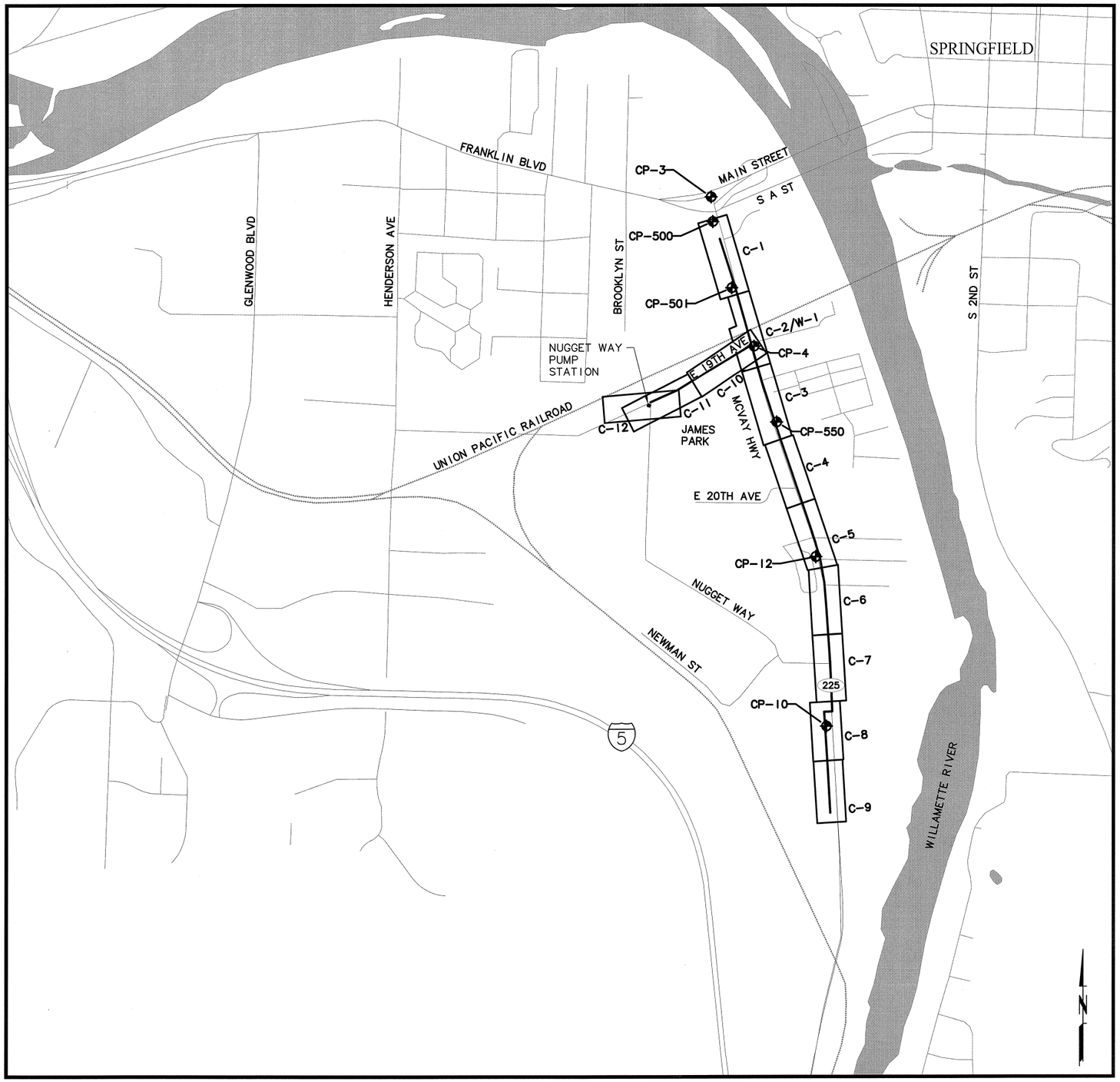

SURVEY CONTROL AND DRAWING KEY MAP

SCALE: 1"=400'

SURVEY CONTROL DATUM

HORIZONTAL–NAD 83/98 (INTERNATIONAL FEET)
OREGON STATE PLANE COORDINATES, SOUTH ZONE

VERTICAL – NAVD 88 (INTERNATIONAL FEET)

CITY PROJECT NUMBER P21080

NO.	DATE	REVISION	BY

DESIGNED: SMG
DRAWN: DAK
CHECKED: WSE
APPROVED: WHH

REGISTERED PROFESSIONAL ENGINEER 17140 OREGON JULY 31, 1998 SUSAN M. GREEN
RENEWS 12-31-14

SCALE VERT: AS SHOWN HORIZ: AS SHOWN
NOTICE 0 1 IF THIS BAR DOES NOT MEASURE 1" THEN DRAWING IS NOT TO SCALE

PROJECT NAME: CITY OF SPRINGFIELD, OREGON
FRANKLIN/McVAY SANITARY SEWER EXTENSION
PROJECT NUMBER P21080

SHEET TITLE: INDEX OF DRAWINGS, SURVEY CONTROL & DRAWING KEY MAP

MSA Murray, Smith & Associates, Inc. Engineers/Planners
121 S.W. Salmon, Suite 900 Portland, Oregon 97204
PHONE 503-225-9010 FAX 503-225-9022

MSA PROJECT: 13-1469.201 DATE: MAY 2014

G-2
2 OF 30

G:\PDX_Projects\13\1469\CAD\SHEETS\13-1469-202-OR-G.dwg G-2 4/29/2014 2:42 PM DKT 18.2s (LMS Tech)

TOPOGRAPHIC LEGEND

	EXISTING	PROPOSED
WATERLINE	16"W	
ELECTRICITY	E	
GAS	4"G	
HIGH PRESSURE GAS	6"HPG	
FIBER OPTIC	2"FO	
TELEPHONE/TELEMETRY	T	
CABLE TELEVISION	CATV	
SANITARY SEWER LINE	8"SS	18"SS
SANITARY SEWER FORCE MAIN	6"FM	6"FM
STORM DRAIN	8"SD	
CULVERT		
ABANDON PIPE		
DRAINAGE DITCH		
BARBED WIRE FENCE		
CHAIN LINK FENCE		
GUARDRAIL		
CENTERLINE		
RAILROAD		
URBAN GROWTH BOUNDARY		
RIGHT-OF-WAY EASEMENT/PROPERTY LINE		
WETLAND BOUNDARY		
EDGE OF PAVEMENT/AC		
EDGE OF GRAVEL		
CURB		
SIDEWALK	S/W	
RETAINING WALL		
STRUCTURE OR FACILITY		
CONTOUR MINOR		
CONTOUR MAJOR	200	
BORE LOCATION		
MANHOLE		
CLEAN-OUT		
CATCH BASIN/FIELD INLET		
THRUST BLOCK		
VALVE		
AIR INJECTION ASSEMBLY		
BLOW-OFF ASSEMBLY		
AIR RELEASE ASSEMBLY		
FIRE HYDRANT ASSEMBLY		
WATER METER		
UTILITY POLE		
GUY WIRE		
LIGHT POST/LUMINAIRE		
MAIL BOX		
SIGN		
BENCH MARK/SURVEY CONTROL POINT		
TREE DECIDUOUS		
TREE CONIFEROUS		
TREE DECIDUOUS TO BE REMOVED		
TREE CONIFEROUS TO BE REMOVED		
TELECOMMUNICATIONS PEDESTAL		

ABBREVIATIONS

AC	ASPHALTIC CONCRETE
ABAN	ABANDON(ED)
ADWF	AVERAGE DRY WEATHER FLOW
AL	ALUMINUM
APPROX	APPROXIMATELY
APPVD	APPROVED
ASSY	ASSEMBLY
ARV	AIR RELEASE VALVE
BLDG	BUILDING
BM	BENCHMARK
BO	BLOW-OFF
BTM	BOTTOM
C/L	CENTER LINE
CB	CATCH BASIN
CCP	CONCRETE CULVERT PIPE
CI	CAST IRON
CG	CURB/GUTTER
CL	CLASS
CO	CLEANOUT
CONC/CON	CONCRETE
CONST	CONSTRUCTION
COP	COPPER
COS	CITY OF SPRINGFIELD
CPLG	COUPLING
CR	CRUSHED ROCK
CV	CHECK VALVE
CY	CUBIC YARD
D	DRAIN
DET	DETAIL
DI	DUCTILE IRON
DIA	DIAMETER
DR	DRIVE
DWG	DRAWING
DWY	DRIVEWAY
EA	EACH
EL	ELEVATION
ELEC/E	ELECTRICAL
EOP	EDGE OF PAVEMENT
EQ	EQUAL
EQUIP	EQUIPMENT
ESMT	EASEMENT
EXIST	EXISTING
EG	EXISTING GRADE
FAB	FABRICATE
FD	FLOOR DRAIN
FH	FIRE HYDRANT
FIN GR	FINISHED GRADE
FL	FLOW LINE
FLG	FLANGE(D)
FM	FORCE MAIN
FO	FIBER OPTIC
FOW	FRONT OF SIDEWALK
FT	FOOT
FTG	FITTING
G	GAS
GALV	GALVANIZED
GR	GRADE
GRVL	GRAVEL
GV	GATE VALVE
HGT	HEIGHT
HORIZ	HORIZONTAL
HWY	HIGHWAY
HP	HIGH PRESSURE
ID	INSIDE DIAMETER
IE	INVERT ELEVATION
INSTL	INSTALL
LAT	LATERAL
LF	LINEAL FEET
LOC	LOCATION
LP	LOW PRESSURE
LT	LEFT
MATL(S)	MATERIAL(S)
MAX	MAXIMUM
MFR(S)	MANUFACTURER('S)
MH(S)	MANHOLE(S)
MIN	MINIMUM
MJ	MECHANICAL JOINT
MUTCD	MANUAL ON UNIFORM TRAFFIC CONTROL DEVICES
NTS	NOT TO SCALE
OC	ON CENTER
OD	OUTSIDE DIAMETER
ODOT	OREGON DEPARTMENT OF TRANSPORTATION
OVHD	OVERHEAD LINE
P	POWER
PCCP	PORTLAND CEMENT CONCRETE PAVEMENT
PCP	PLAIN CONCRETE PAVEMENT
PE	PLAIN END
PERM	PERMANENT
P/L	PROPERTY LINE
POLY	POLYETHYLENE
PRESS	PRESSURE
PROP	PROPOSED
PS	PUMP STATION
PUGD	UNDERGROUND POWER
PV	PLUG VALVE
PVC	POLYVINYL CHLORIDE
PVMT	PAVEMENT
RCP	REINFORCED CONCRETE PIPE
RD	ROAD
RDCR	REDUCER
REINF	REINFORCE(D)(ING)(MENT)
RESTR	RESTRAIN(ED)
REQ'D	REQUIRED
RT	RIGHT
R/W	RIGHT OF WAY
SCHED	SCHEDULE
SD	STORM DRAIN
SERV	SERVICE
SHT(S)	SHEET(S)
SL	SLOPE
SPECS	SPECIFICATIONS
SPL	SPOOL
SQ	SQUARE
SQ FT	SQUARE FOOT
SS	SANITARY SEWER
SSCO	SANITARY SEWER CLEANOUT
SSMH	SANITARY SEWER MANHOLE
SST	STAINLESS STEEL
ST	STREET
STA	STATION
STL	STEEL
STD	STANDARD
SUB	SPRINGFIELD UTILITY BOARD
S/W	SIDEWALK
TEL/T	TELEPHONE
TB	THRUST BLOCK
TEMP	TEMPORARY
THK	THICK
THRU	THROUGH
TV	TELEVISION
TYP	TYPICAL
VERT	VERTICAL(LY)
W	WATER
W/	WITH
W/IN	WITHIN
W/O	WITHOUT
WM	WATER METER

SECTION AND DETAIL DESIGNATIONS

SECTION DESIGNATIONS

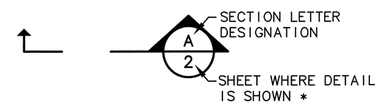

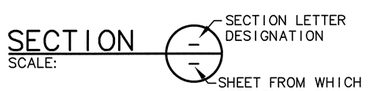

DETAIL DESIGNATIONS

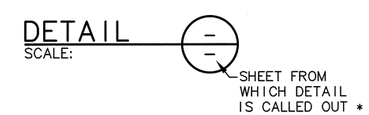

* NOTE: IF PLAN AND SECTION FOR DETAIL CALL-OUT AND DETAIL ARE SHOWN ON THE SAME DRAWING, DRAWING NUMBER IS REPLACED WITH A DASH.

CITY PROJECT NUMBER P21080

NO.	DATE	REVISION	BY

DESIGNED: SMG
DRAWN: DAK
CHECKED: WSE
APPROVED: WHH

REGISTERED PROFESSIONAL ENGINEER 17140 OREGON SUSAN M. GUTH-SHIRA RENEWS 12-31-14

G-3
3 OF 30

SCALE VERT: AS SHOWN HORIZ: AS SHOWN

NOTICE
0 1
IF THIS BAR DOES NOT MEASURE 1" THEN DRAWING IS NOT TO SCALE

PROJECT NAME: CITY OF SPRINGFIELD, OREGON
FRANKLIN/McVAY SANITARY SEWER EXTENSION
PROJECT NUMBER P21080

SHEET TITLE: SYMBOLS, LEGEND & ABBREVIATIONS

MSA
Murray, Smith & Associates, Inc.
Engineers/Planners
121 S.W. Salmon, Suite 900 Portland, Oregon 97204
PHONE 503-225-9010
FAX 503-225-0022

MSA PROJECT: 13-1469.201 DATE: MAY 2014

G:\PDX_Projects\13\1469\CAD\SHEETS\13-1469-202-OR-G.dwg G-3 4/29/2014 1:50 PM DKT 18.2s (LMS Tech)

GENERAL NOTES

1. ALL MATERIALS AND WORKMANSHIP SHALL, AT A MINIMUM, MEET CITY OF SPRINGFIELD DEPARTMENT OF PUBLIC WORKS "STANDARD CONSTRUCTION SPECIFICATIONS, 1994" AS AMENDED IN 1998 (OR CURRENT EDITION), IN ADDITION TO THESE PLANS.

2. OREGON LAW REQUIRES THE CONTRACTOR TO FOLLOW RULES ADOPTED BY THE OREGON UTILITY NOTIFICATION CENTER. THOSE RULES ARE SET FORTH IN OAR 952-001-0010 THROUGH OAR 952-001-0100. THE CONTRACTOR MAY OBTAIN COPIES OF THE RULES BY CALLING THE CENTER. NOTE: THE TELEPHONE NUMBER FOR THE OREGON UTILITY NOTIFICATION CENTER IS (800) 332-2344.

3. LOCATION AND/OR DEPTH OF EXISTING UTILITIES SHOWN ON PLANS ARE APPROXIMATE. ALL UTILITIES MAY NOT APPEAR ON PLANS. IT IS THE CONTRACTOR'S RESPONSIBILITY TO CONTACT ALL UTILITY COMPANIES FOR UNDERGROUND LOCATION OF FACILITIES AT LEAST 48 HOURS PRIOR TO EXCAVATING OR "POTHOLING". THE UTILITY "ONE-CALL" NUMBER IS (800) 332-2344 OR 811.

4. LOCATIONS OF EXISTING UTILITIES ARE BASED ON INFORMATION SUPPLIED BY THE UTILITIES AND CONSIDERED APPROXIMATE ONLY. WORK FOR THIS CONTRACT MAY BE LOCATED IN CLOSE PROXIMITY TO EXIST UTILITIES. THE CONTRACTOR SHALL POTHOLE AND VERIFY LOCATIONS, ELEVATIONS, TYPES AND SIZES OF EXISTING UTILITIES PRIOR TO CONSTRUCTING NEW PIPING FAR ENOUGH IN ADVANCE TO ALLOW NECESSARY ADJUSTMENTS IN GRADE AND SHALL NOTIFY ENGINEER OF NEED TO ADJUST PIPING INSTALLATION ACCORDINGLY. POTHOLING SHALL SUFFICIENTLY PRECEDE LAYING OF PIPE TO ALLOW REQUIRED ELEVATION ADJUSTMENTS TO BE ACCOMPLISHED WITHOUT REWORK. ELEVATION ADJUSTMENTS SHALL BE EXPECTED AND ARE INCIDENTAL TO THE WORK.

5. NOTIFY UTILITIES PRIOR TO WORK IMPACTING UTILITY POLES. COORDINATE PROTECTION, RELOCATION, OR REPLACEMENT OF UTILITY POLES AND OR GUY WIRES WITH UTILITIES. NO SEPARATE PAYMENT WILL BE MADE FOR PROTECTION, RELOCATION OR REPLACEMENT OF UTILITY POLES AND OR GUY WIRES NECESSARY TO FACILITATE CONSTRUCTION ACTIVITIES.

6. OVERHEAD LINES OCCUR ALONG THE PIPE ALIGNMENT. CONTRACTOR SHALL VISIT THE SITE TO CONFIRM THE CONDITIONS AND LOCATION OF OVERHEAD LINES AND PLAN OPERATIONS SO THAT OVERHEAD LINES ARE NOT IMPACTED.

7. CONTRACTOR SHALL BE RESPONSIBLE FOR COORDINATION WITH UTILITY COMPANIES ON THE TIMING OF INSTALLATION OF THE FACILITIES.

8. THE CONTRACTOR SHALL PROVIDE ALL TRAFFIC CONTROL DEVICES NECESSARY TO PROTECT AND SAFEGUARD THE PUBLIC AND WORKERS AGAINST INJURY AND PROTECT THE WORK AGAINST DAMAGE. ALL TEMPORARY TRAFFIC CONTROL SIGNING AND DEVICES SHALL BE IN PLACE PRIOR TO BEGINNING WORK. ALL TRAFFIC CONTROL SHALL CONFORM TO THE MANUAL ON UNIFORM TRAFFIC CONTROL DEVICES FOR STREETS AND HIGHWAYS (MUTCD), CURRENT EDITION, AS SUPPLEMENTED AND AMENDED BY THE OREGON SUPPLEMENTS. FLAGGING SHALL BE PERFORMED AS SHOWN IN THE THE "OREGON TEMPORARY TRAFFIC CONTROL HANDBOOK FOR OPERATIONS OF THREE DAYS OR LESS", 2011 OR CURRENT EDITION. THE CONTRACTOR SHALL BE RESPONSIBLE FOR ANY REQUIRED TRAFFIC CONTROL AS FIELD CONDITIONS WARRANT.

9. ALL SANITARY AND STORM SEWER CONNECTIONS TO EXISTING CITY OWNED FACILITIES (PIPE, CATCH BASINS, MANHOLES, ETC.) SHALL BE INSPECTED BY THE CONTRACTOR AND THE CITY'S PUBLIC WORKS MAINTENANCE DEPARTMENT PRIOR TO HOOK UP. CONTACT MIKE RISLEY (541-726-3615) OR DENNY WRIGHT (541-726-1010) NO LESS THAN 48 HOURS PRIOR TO DESIRED INSPECTION TIME.

10. WHERE CONNECTING TO AN EXISTING PIPE, THE CONTRACTOR SHALL EXPOSE THE END OF THE EXISTING PIPE AND ALLOW THE ENGINEER TO VERIFY EXACT LOCATION AND ELEVATION, CONDITION, AND POSITIVE FLOW BEFORE LAYING ANY NEW PIPE ON THAT SYSTEM.

11. THE SEWER GRADE SHALL BE PER THE PLANS, SPECIFICATIONS AND WITH THE MINIMUM COVER AS SHOWN ON THE PLANS.

12. ALL PVC SEWER PIPE 15-INCH DIAMETER AND SMALLER SHALL BE ASTM D3034. ALL PVC SEWER PIPE 18-INCH DIAMETER AND LARGER SHALL BE ASTM F679. PVC SEWER PIPE WITH LESS THAN 10 FEET OF COVER SHALL BE SDR 35/PS 46. PVC SEWER PIPE WITH COVER 10 FEET OR GREATER SHALL BE SDR26/PS 115, UNLESS OTHERWISE SHOWN ON THE PLANS.

13. CONTRACTOR TO SCHEDULE A PRE-PAVING MEETING TO BE HELD A MINIMUM OF 48 HOURS PRIOR TO PAVING.

14. ALL JOINTS BETWEEN EXISTING AND NEW ASPHALT PAVING SHALL BE SEALED WITH POLYMERIZED ASPHALT AND SANDED TO PREVENT PICK UP.

15. COMPACTION REQUIREMENTS, REFER TO COS STANDARD CONSTRUCTION SPECIFICATIONS AND DETAILS:

LAYER	RATE	TEST
SUBGRADE	95%	T99
CRUSHED ROCK	95%	T180
ASPHALT (LOCAL)	90%	RICE
ASPHALT (COLLECTOR/ARTERIAL)	92%	RICE

16. CONCRETE COMPRESSIVE STRENGTH REQUIREMENTS (PSI), REFER TO CITY OF SPRINGFIELD STANDARD CONSTRUCTION SPECIFICATIONS:

CONCRETE USE	FIELD	LABORATORY
SIDEWALK/ADA RAMPS	3000	3450
CURBS/GUTTERS	3500	4025
DRIVEWAYS	3500	4025
PAVEMENT	4000	4600
CLSM/CDF	100-200	100-200

17. THE CONTRACTOR SHALL INTERNALLY TELEVISION INSPECT THE SEWER AFTER ALL BACKFILL AND BEFORE THE FINAL LIFT OF ASPHALT PAVING. THE CONTRACTOR SHALL SUPPLY THE CITY WITH A WRITTEN TV REPORT AND VIDEO DVD FOR CITY APPROVAL AT LEAST 2 WORKING DAYS BEFORE PAVING.

18. THIS PROJECT SHALL COMPLY WITH THE AMERICAN DISABILITIES ACT REQUIREMENTS SUCH AS INCORPORATION OF DESIGN CRITERIA FOR HANDICAP RAMPS, MAXIMUM PROFILE AND CROSS SECTION SLOPES FOR SIDEWALKS, UPGRADING EXISTING HANDICAP FACILITIES WHERE MAJOR CONSTRUCTION OCCURS.

19. ALL IMPROVEMENTS THAT WILL BE PRIVATELY OWNED AND MAINTAINED WILL BE BOUND BY THE CURRENT REQUIREMENTS OF THE STATE OF OREGON STRUCTURAL SPECIALTY CODE, PLUMBING SPECIALTY CODE, AND/OR CITY OF SPRINGFIELD BUILDING DIVISION REQUIREMENTS. CONTRACTOR IS RESPONSIBLE FOR OBTAINING APPLICABLE PERMITS FROM OTHER CITY DEPARTMENTS PRIOR TO DOING PRIVATE WORK.

20. A PRE-CONSTRUCTION CONFERENCE IS REQUIRED BEFORE START OF CONSTRUCTION. ALL UTILITIES, CONTRACTORS, ODOT REPRESENTATIVES, COUNTY REPRESENTATIVES AND CITY REPRESENTATIVES SHALL HAVE RECEIVED THE FINAL APPROVED PLANS AT LEAST 5 WORKING DAYS PRIOR TO THE PRE-CONSTRUCTION CONFERENCE.

21. THE ENGINEER AND/OR CITY HAVE THE RIGHT TO REQUIRE ADDITIONAL WORK NOT SHOWN HEREIN BUT NECESSARY FOR THE SUCCESSFUL COMPLETION OF THE PROJECT.

22. REQUESTS BY THE CONTRACTOR FOR CHANGES SHALL BE APPROVED BY THE ENGINEER AND THE CITY IN WRITING PRIOR TO IMPLEMENTATION.

23. CONTRACTOR SHALL BE AWARE OF CITY STANDARDS IF PAVING IS NOT SCHEDULED OR DOES NOT OCCUR PRIOR TO OCTOBER 15TH. WET WEATHER PROVISIONS INCLUDING ADDITIONAL ROCK SUBSTRUCTURE AND GEOTEXTILE FABRIC SHALL BE USED OUTSIDE OF THE MAY 1ST TO OCTOBER 15TH TIMEFRAME. REFER TO STANDARD SPECIFICATION SECTION 301.1.01 AND THE TYPICAL CROSS SECTIONS FOR DETAILS.

24. CONTRACTOR SHALL COMPLY WITH ALL REQUIREMENTS OF ORS 757.541 TO 757.571. CONTRACTOR SHALL NOTIFY EACH UNDERGROUND UTILITY AT LEAST 48 BUSINESS-DAY HOURS, BUT NOT MORE THAN 10 BUSINESS DAYS, PRIOR TO EXCAVATING, BORING, OR POTHOLING.

25. CONTRACTOR SHALL PROTECT ALL EXISTING UTILITIES FROM DAMAGE CAUSED BY CONSTRUCTION OF NEW SEWER FACILITIES. NO ADDITIONAL PAYMENT SHALL BE MADE FOR UTILITY RELOCATION COORDINATION OR DELAYS CAUSED BY UTILITY CONFLICTS. ALL COSTS RELATED TO UTILITY COORDINATION, PROTECTION AND RELOCATION, INCLUDING ADDITIONAL POTHOLING, ARE TO BE CONSIDERED INCIDENTAL AND INCLUDED IN THE UNIT PRICES OF THE BID.

26. UTILITIES OR INTERFERING PORTIONS OF UTILITIES THAT ARE ABANDONED IN PLACE SHALL BE REMOVED BY THE CONTRACTOR TO THE EXTENT NECESSARY TO ACCOMPLISH THE WORK. CONTRACTOR SHALL PLUG THE REMAINING EXPOSED ENDS OF ABANDONED UTILITIES, UNLESS OTHERWISE REQUIRED BY THE ENGINEER.

27. CONTRACTOR SHALL KEEP AND MAINTAIN A CURRENT SET OF DRAWINGS ON SITE. CONTRACTOR TO CREATE ACCURATE "AS-BUILT" MARK-UP RECORD DRAWINGS. "AS-BUILT" PLANS TO BE RETURNED TO ENGINEER AT COMPLETION OF PROJECT.

28. CONTRACTOR SHALL PROTECT ALL PROPERTY CORNERS, SURVEY MONUMENTS AND CONTROL POINTS. SURVEY MONUMENTS OF THIS TYPE DISTURBED DURING CONSTRUCTION SHALL BE REPLACED AT CONTRACTOR'S EXPENSE, WITH APPROPRIATE SURVEYS FILED WITH THE COUNTY SURVEYOR.

29. THE CONTRACTOR SHALL DISPOSE OF ALL REMOVED OR REPLACED MATERIAL AND EQUIPMENT IN ACCORDANCE WITH ALL APPLICABLE REGULATIONS, EXCEPT THOSE ITEMS DESIGNATED BY THE OWNER FOR SALVAGING. SALVAGED ITEMS SHALL REMAIN THE PROPERTY OF THE OWNER, AND SHALL BE CAREFULLY REMOVED AND STORED AS DIRECTED.

30. ALL EXISTING FEATURES INCLUDING STRUCTURES, LOTS, SWALES, DITCHES, CURBS, FENCES, WALLS, MAILBOXES, SIGNS, POLES, GUY WIRES, PIPING, AND UTILITIES DISTURBED DURING CONSTRUCTION ARE TO BE RESTORED TO EXISTING CONDITION UNLESS OTHERWISE SPECIFIED.

31. CONTRACTOR SHALL MAINTAIN ACCESS TO ALL HOMES AND BUSINESSES AT ALL TIMES. PROVIDE WRITTEN NOTICE TO ALL PROPERTY OWNERS AT LEAST TWO BUSINESS DAYS IN ADVANCE OF WORK IN AND/OR CROSSING OF DRIVEWAYS.

32. AT THE END OF EACH WORK DAY ALL OPEN TRENCHES SHALL BE BACKFILLED OR ADEQUATELY COVERED OR PROTECTED TO ACCOMMODATE TRAFFIC AND PEDESTRIANS OR TO PREVENT TRAFFIC AND PEDESTRIANS FROM ENTERING THE IMMEDIATE WORK ZONE. ALL TRENCHES LONGER THAN 500 FEET SHALL BE TEMPORARILY PAVED WITH BASE COURSE. ALL TRENCHES REGARDLESS OF LENGTH SHALL BE TEMPORARILY PAVED NO LESS THAN WEEKLY WITH BASE COURSE.

33. PRIOR TO CONSTRUCTION THE CONTRACTOR SHALL FLAG TREES PROPOSED FOR REMOVAL AS MAY BE REQUIRED TO FACILITATE THE CONTRACTORS OPERATIONS. CONTRACTOR SHALL OBTAIN ALL NECESSARY TREE REMOVAL PERMITS FROM THE CITY OF SPRINGFIELD, SEE SPECIFICATIONS. TREE REMOVAL WILL BE CONSIDERED INCIDENTAL TO CONSTRUCTION OF THE SEWER.

34. PRIOR TO CONSTRUCTION, PROTECT EXISTING TREES NOT DESIGNATED FOR REMOVAL FROM ALL CONSTRUCTION OPERATIONS. DO NOT FILL OR OTHERWISE DISTURB THE AREA WITHIN THE DRIP LINE OF TREES TO BE PRESERVED.

35. THE CONTRACTOR IS RESPONSIBLE FOR ALL SEWAGE BY-PASS PUMPING AND/OR TEMPORARY DIVERSION CONNECTIONS NECESSARY FOR CONSTRUCTION. SEE SPECIFICATIONS.

36. MANHOLE RIMS AND ALL OTHER CASTINGS INCLUDING VALVE BOXES SHALL BE SET TO FINISHED GRADE PRIOR TO PAVING.

37. SPRINGFIELD CODE 10.2.1 REQUIRES NOTIFICATION OF OPEN TRENCHING FOR THE PROJECT TO ALLOW POSSIBLE FUTURE COMMUNICATIONS CABLE INSTALLATION.

38. BEFORE BACKFILLING THE END OF A MAINLINE PIPE NOT ENDING AT A MANHOLE OR A CLEANOUT, THE CONTRACTOR SHALL PERFORM THE TV INSPECTION AS REQUIRED BY THE STANDARD SPECIFICATIONS TO ALLOW THE ENGINEER TO DETERMINE THE EXACT LOCATION AND ELEVATION OF THE END OF THE PIPE.

39. STREET TREES, WHERE REQUIRED, SHALL BE SELECTED FROM THE APPROVED LIST OF STREET TREES IN THE SPRINGFIELD DEVELOPMENT CODE.

40. CONTRACTOR SHALL SUBMIT EVIDENCE OF INSURANCE IN ACCORDANCE WITH THE STANDARD SPECIFICATIONS TO THE CITY FOR APPROVAL PRIOR TO THE PRE-CONSTRUCTION CONFERENCE.

41. NOTIFY NW NATURAL GAS AT LEAST 24 HOURS PRIOR TO EXCAVATING WITHIN 10 FEET OF ANY HIGH PRESSURE GAS LINE AT (503-220-2415). A NW NATURAL GAS REPRESENTATIVE WILL BE REQUIRED TO BE ONSITE WHEN EXCAVATING WITHIN 10 FEET OF ANY HIGH PRESSURE GAS LINE, UNLESS OTHERWISE APPROVED IN WRITING BY NW NATURAL GAS.

42. PROTECT EXISTING CURBS, SIDEWALKS AND SIDEWALK RAMPS DURING CONSTRUCTION. WHERE DAMAGE TO CURBS, SIDEWALKS AND SIDEWALK RAMPS OCCURS AND WHERE APPROVED BY THE ENGINEER OR OWNER, REMOVE DAMAGED SECTIONS AND REPLACE ACCORDING TO APPROVED CITY OF SPRINGFIELD STANDARD DRAWINGS.

43. PROTECT EXISTING SANITARY SEWER LATERALS DURING CONSTRUCTION. WHERE THE ELEVATION OF AN EXISTING SERVICE LATERAL IS IN CONFLICT WITH THE ELEVATION OF THE NEW PIPELINE, REMOVE AND RECONSTRUCT SERVICE LATERAL TO SEWER MAIN CONNECTION PER CITY OF SPRINGFIELD STANDARD DRAWINGS 4-6 AND 4-7. REPLACE LENGTH OF LATERAL AS NEEDED TO MAINTAIN POSITIVE SLOPE FORM HOUSE CONNECTION TO MAIN.

44. ALL PERMANENT PAVEMENT MARKINGS, STRIPING AND LEGENDS DAMAGED OR REMOVED AS A RESULT OF CONSTRUCTION SHALL BE REPLACED TO MATCH EXISTING LAYOUT. REFER TO SPECIFICATIONS FOR REQUIREMENTS.

CITY PROJECT NUMBER P21080

NO.	DATE	REVISION	BY

DESIGNED: SMG
DRAWN: DAK
CHECKED: WSE
APPROVED: WHH

REGISTERED PROFESSIONAL ENGINEER 17140 OREGON JULY 31, 1998 SUSAN M. GREER
RENEWS 12-31-14

SCALE VERT: AS SHOWN HORIZ: AS SHOWN
NOTICE 0 1 IF THIS BAR DOES NOT MEASURE 1" THE DRAWING IS NOT TO SCALE

PROJECT NAME: CITY OF SPRINGFIELD, OREGON
FRANKLIN/McVAY SANITARY SEWER EXTENSION
PROJECT NUMBER P21080

SHEET TITLE: GENERAL NOTES

G-4
4 OF 30

MSA Murray, Smith & Associates, Inc. Engineers/Planners
121 S.W. Salmon, Suite 1900 Portland, Oregon 97204
PHONE 503-225-9010 FAX 503-225-9022

MSA PROJECT: 13-1469.201 DATE: MAY 2014

G:\PDX_Projects\13\1469\CAD\SHEETS\13-1469-202-OR-G.dwg G-4 4/29/2014 1:50 PM DKT 18.2s (LMS Tech)

EROSION CONTROL NOTES

1. EROSION CONTROL SHALL COMPLY WITH CITY'S NPDES – 1200CA PERMIT AND THESE NOTES AND DETAILS.

2. THESE PLANS DO NOT RELIEVE THE PERMIT HOLDER AND OR THE CONTRACTOR FROM ALL OTHER PERMITTING REQUIREMENTS. PRIOR TO BEGINNING CONSTRUCTION ACTIVITIES, ALL OTHER NECESSARY APPROVALS SHALL BE OBTAINED.

3. AN INSPECTION OF THE EROSION CONTROL MEASURES BY CITY IS REQUIRED PRIOR TO ANY GROUND DISTURBANCE ON THE SITE.

4. THE EROSION AND SEDIMENT CONTROL MEASURES SHALL BE UPGRADED AS NEEDED FOR UNEXPECTED STORM EVENTS AND TO ENSURE THAT SEDIMENT AND SEDIMENT–LADEN WATER DOES NOT LEAVE THE SITE.

5. THE IMPLEMENTATION AND THE CONSTRUCTION, MAINTENANCE, REPLACEMENT, AND UPGRADING OF THE EROSION AND SEDIMENT CONTROL (ESC) MEASURES IS THE RESPONSIBILITY OF THE CONTRACTOR UNTIL ALL CONSTRUCTION IS COMPLETED AND ACCEPTED BY THE CITY AND VEGETATION/LANDSCAPING IS ESTABLISHED PER THE REQUIRED WARRANTY PERIOD.

6. IN THE EVENT THE FACILITIES ARE NOT FUNCTIONING PROPERLY, THE CONTRACTOR IS RESPONSIBLE FOR IMMEDIATELY IMPLEMENTING CHANGES AS DIRECTED BY THE ENGINEER OR INSPECTOR. THE ENGINEER, INSPECTOR OR THE CITY MAY STOP ALL CONSTRUCTION ACTIVITY ON SITE UNTIL THE EROSION PROBLEM IS CORRECTED AND ALL EROSION AND SEDIMENTATION CONTROL (ESC) FACILITIES ARE FUNCTIONING PROPERLY. IF THE CONTRACTOR DOES NOT IMMEDIATELY IMPLEMENT CHANGES TO THE EROSION AND SEDIMENTATION CONTROL (ESC) IDENTIFIED BY THE ENGINEER OR INSPECTOR, THE CITY MAY IMPLEMENT THE NECESSARY CHANGES AND REQUIRE PAYMENT FROM THE CONTRACTOR PRIOR TO PROJECT ACCEPTANCE BY THE CITY.

7. IN PREPARATION OF THE WET SEASON, ALL DISTURBED AREAS SHALL BE REVIEWED TO IDENTIFY WHICH ONES CAN BE SEEDED IN PREPARATION FOR THE WINTER RAINS. A SKETCH MAP OF THOSE AREAS TO BE SEEDED AND THOSE AREAS TO REMAIN UNCOVERED SHALL BE SUBMITTED TO THE CITY BY SEPTEMBER 15. THE CITY CAN REQUIRE SEEDING OF ADDITIONAL AREAS IN ORDER TO PROTECT SURFACE WATERS, ADJACENT PROPERTIES, OR DRAINAGE FACILITIES. DISTURBED AREAS IDENTIFIED FOR SEEDING AREAS SHALL BE SEEDED PRIOR TO THE BEGINNING OF THE WET SEASON (OCTOBER 1).

8. THE EROSION AND SEDIMENT CONTROL MEASURES ON ACTIVE SITES SHALL BE INSPECTED AND MAINTAINED DAILY AND WITHIN 24 HOURS AFTER ANY STORM EVENT OF GREATER THAN 0.5 INCHES OF RAIN PER 24 HOUR PERIOD. MEASURES SHALL BE INSPECTED BY THE PERMIT HOLDER AND OR THE CONTRACTOR AFTER EACH RAINFALL AND AT LEAST DAILY DURING PROLONGED RAINFALL. ANY REQUIRED REPAIRS OR ADJUSTMENTS SHALL BE MADE IMMEDIATELY. THE EROSION AND SEDIMENT CONTROL MEASURES ON INACTIVE SITES SHALL BE INSPECTED A MINIMUM OF ONCE EVERY TWO (2) WEEKS OR WITHIN 48 HOURS FOLLOWING A STORM EVENT. WRITTEN RECORDS SHALL BE KEPT OF WEEKLY REVIEWS OF THE ESC FACILITIES DURING THE WET SEASON (OCTOBER 1 TO APRIL 30) AND OF MONTHLY REVIEWS DURING THE DRY SEASON (MAY 1 TO SEPTEMBER 30).

9. ALL EROSION AND SEDIMENT CONTROL MEASURES SHALL BE PROTECTED FROM DAMAGE AT ALL TIMES. CONTROL MEASURES SHALL REMAIN IN PLACE UNTIL PERMANENT OR TEMPORARY RE–VEGETATION HAS BEEN STABILIZED. ANY MEASURE THAT IS DAMAGED OR DESTROYED SHALL BE REPAIRED OR REPLACED IMMEDIATELY.

10. ANY AREAS OF EXPOSED SOILS, INCLUDING ROADWAY EMBANKMENTS, THAT WILL NOT BE DISTURBED FOR TWO DAYS DURING THE WET SEASON (OCTOBER 1 TO APRIL 30) OR SEVEN DAYS DURING THE DRY SEASON (MAY 1 TO SEPTEMBER 30) SHALL BE IMMEDIATELY STABILIZED WITH ON APPROVED ESC METHOD (SEEDING & MULCHING WITH STRAW, BARK, COMPOST, OR PLASTIC COVERING, ETC.).

11. A SUPPLY OF MATERIALS NECESSARY TO MEET COMPLIANCE UNDER ALL WEATHER CONDITIONS SHALL BE MAINTAINED AT ALL TIMES ON THE CONSTRUCTION SITE.

12. NO HAZARDOUS SUBSTANCES, SUCH AS PAINTS, THINNERS, FUELS AND OTHER CHEMICALS SHALL BE RELEASED ONTO THE SITE, ADJACENT PROPERTIES, OR INTO WATER FEATURES, THE CITY'S STORM WATER SYSTEM, OR RELATED NATURAL RESOURCES.

13. STREET SWEEPING SHALL BE PERFORMED AS NEEDED OR WHEN DIRECTED TO ENSURE PUBLIC RIGHT–OF–WAYS ARE KEPT CLEAN AND FREE OF DEBRIS. STREET FLUSHING IS PROHIBITED.

14. WHEN TRUCKING SATURATED SOILS FROM THE SITE, EITHER WATER–TIGHT TRUCKS SHALL BE USED OR LOADS SHALL BE DRAINED ON SITE UNTIL DRIPPING HAS BEEN REDUCED TO NO MORE THAN ONE GALLON PER HOUR. SEDIMENT LADEN WATER WILL NOT BE ALLOWED TO ENTER THE STORM WATER SYSTEM.

15. EXTRACTED GROUND WATER FROM EXCAVATED TRENCHES SHALL BE DISPOSED OF IN A SUITABLE MANNER WITHOUT DAMAGE TO ADJACENT PROPERTY, PUBLIC STORM WATER SYSTEM, WATER FEATURES, AND RELATED NATURAL RESOURCES. APPROVAL OF A DEWATERING SYSTEM DOES NOT GUARANTEE THAT IT WILL MEET COMPLIANCE OR BE ACCEPTABLE FOR USE IN ALL SITUATIONS. MODIFICATIONS TO THE DEWATERING SYSTEM WILL BE REQUIRED IF COMPLIANCE CAN NOT BE MET. AT NO TIME WILL SEDIMENT LADEN WATER BE ALLOWED TO LEAVE THE CONSTRUCTION SITE.

16. AT NO TIME SHALL MORE THAN ONE FOOT OF SEDIMENT BE ALLOWED TO ACCUMULATE WITHIN A CATCH BASIN. ALL CATCH BASINS AND CONVEYANCE LINES SHALL BE CLEANED PRIOR TO PAVING. THE CLEANING OPERATION SHALL NOT FLUSH SEDIMENT–LADEN WATER INTO THE DOWNSTREAM SYSTEM.

17. ANY REQUIRED STABILIZED CONSTRUCTION ENTRANCES AND ROADS SHALL BE INSTALLED AT THE BEGINNING OF CONSTRUCTION AND MAINTAINED FOR THE DURATION OF THE PROJECT. ADDITIONAL MEASURES, SUCH AS WASH PADS, MAY BE REQUIRED TO ENSURE THAT ALL PAVED AREAS ARE KEPT CLEAN FOR THE DURATION OF THE PROJECT.

18. ANY PERMANENT FLOW CONTROL FACILITY USED AS A TEMPORARY SETTLING BASIN SHALL BE MODIFIED WITH THE NECESSARY EROSION CONTROL MEASURES AND SHALL PROVIDE ADEQUATE STORAGE CAPACITY.

19. WHERE STRAW MULCH FOR TEMPORARY EROSION CONTROL IS REQUIRED, IT SHALL BE APPLIED AT A MINIMUM THICKNESS OF TWO TO THREE INCHES.

20. APPROVAL OF THE CONTRACTOR'S EROSION AND SEDIMENTATION CONTROL PLAN (ESCP) DOES NOT CONSTITUTE AN APPROVAL OF PERMANENT ROAD OR DRAINAGE DESIGN (E.G., SIZE AND LOCATION OF ROADS, PIPES, RESTRICTORS, CHANNELS, RETENTION FACILITIES, UTILITIES, ETC).

21. THE BOUNDARIES OF THE CLEARING LIMITS SHOWN ON THESE PLANS SHALL BE CLEARLY FLAGGED IN THE FIELD BY THE CONTRACTOR PRIOR TO CONSTRUCTION. DURING THE CONSTRUCTION PERIOD, NO DISTURBANCE BEYOND THE FLAGGED CLEARING LIMITS SHALL BE PERMITTED. THE FLAGGING SHALL BE MAINTAINED BY THE CONTRACTOR FOR THE DURATION OF CONSTRUCTION.

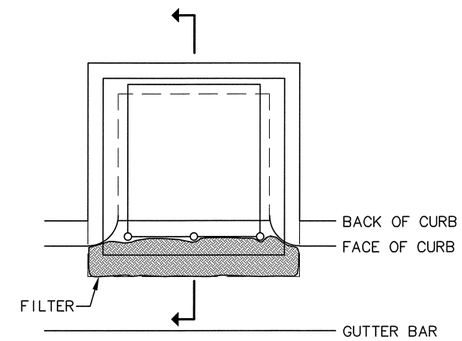

PLAN

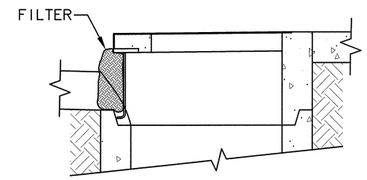

SECTION

FILTER INSERT (1/–)
SCALE: NTS

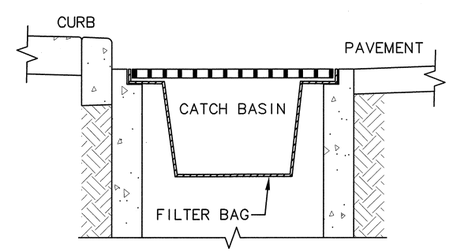

SECTION

CATCH BASIN PROTECTION (2/–)
SCALE: NTS

CITY PROJECT NUMBER P21080

NO.	DATE	REVISION	BY

DESIGNED: SMG
DRAWN: DAK
CHECKED: WSE
APPROVED: WHH

REGISTERED PROFESSIONAL ENGINEER 17140 OREGON SUSAN M. SMITH RENEWS 12-31-14

SCALE VERT: AS SHOWN HORIZ: AS SHOWN
NOTICE 0 1 IF THIS BAR DOES NOT MEASURE 1" THEN DRAWING IS NOT TO SCALE

PROJECT NAME: CITY OF SPRINGFIELD, OREGON
FRANKLIN/McVAY SANITARY SEWER EXTENSION
PROJECT NUMBER P21080

SHEET TITLE: EROSION CONTROL NOTES & DETAILS

G-5
5 OF 30

MSA Murray, Smith & Associates, Inc. Engineers/Planners
121 S.W. Salmon, Suite 900 Portland, Oregon 97204
PHONE 503-225-9010 FAX 503-225-9022

MSA PROJECT: 13-1469.201 DATE: MAY 2014

G:\PDX_Projects\13\1469\CAD\SHEETS\13-1469-202-OR-G.dwg G-5 4/29/2014 1:50 PM DKT 18.2s (LMS Tech)

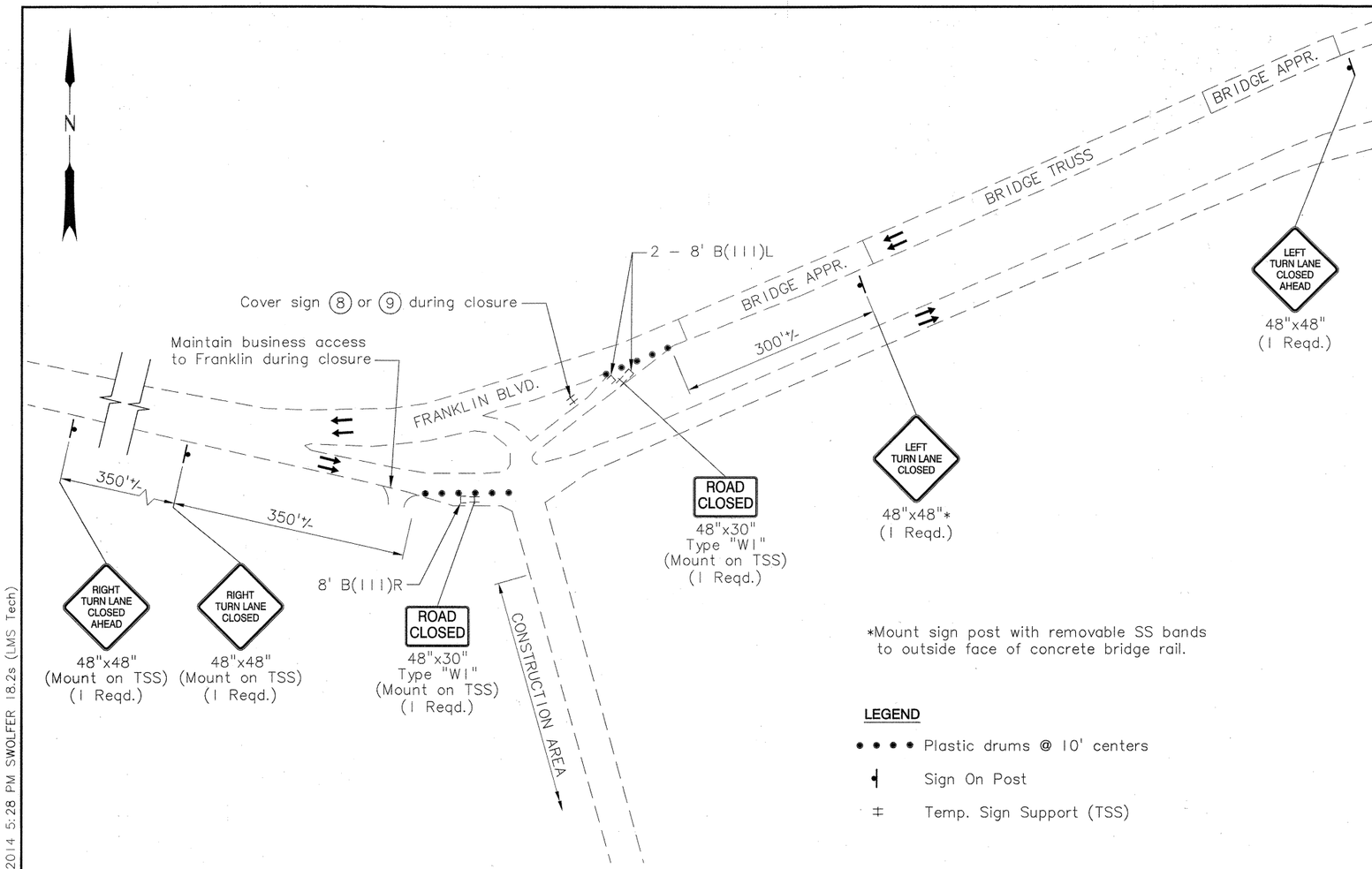

LEFT/RIGHT TURN LANE CLOSURE - FRANKLIN BLVD.

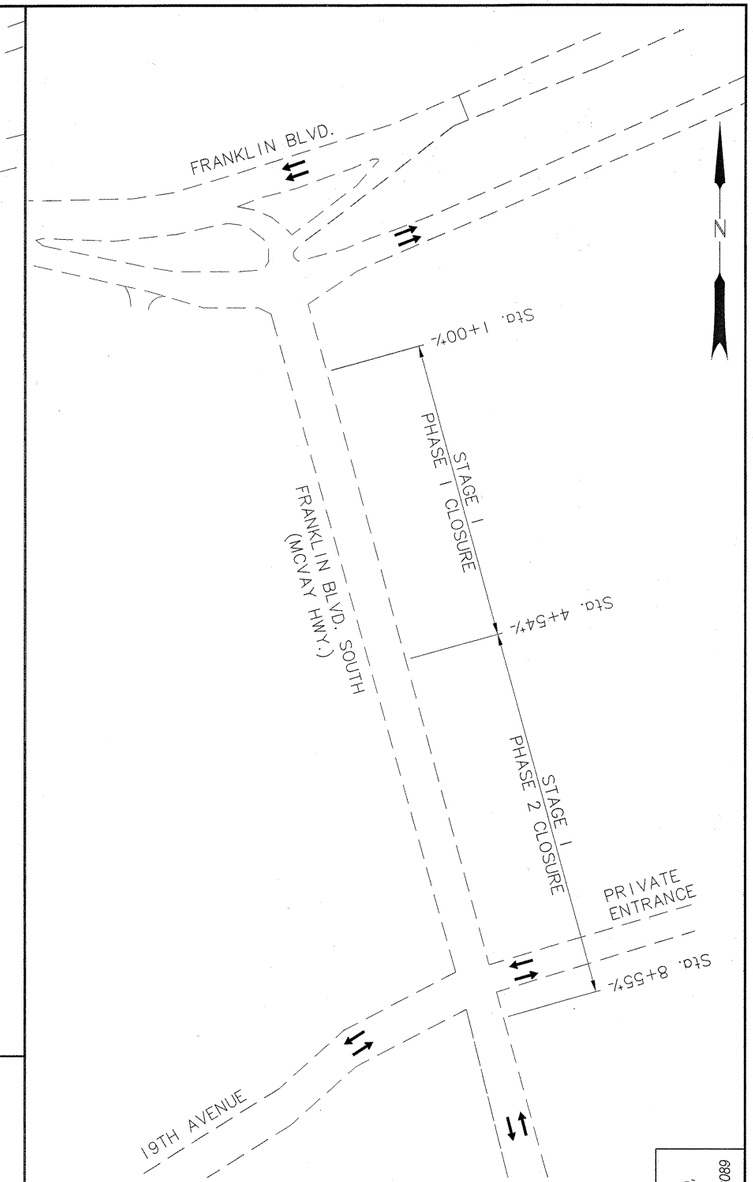

STAGE I PHASE 1 & 2 CONSTRUCTION LIMITS

General Notes:

1. No lane closures along detour route will be permitted when detour is in place.
2. Flagger control shall be used at intersections and key locations as directed.
3. Drawings to be accompanied by ODOT Std. Drg. Nos. TM800, TM820, TM821, TM840, TM841 & TM850.
4. Turn–lane closures on Franklin Blvd. require City of Springfield approval prior to closure.
5. Street closures shall be at the construction limits only and coordinated with access requirements (see Special Provisions).
6. Construction limit closures that impact adjacent businesses require City of Springfield approval prior to closure.
7. Utilize appropriate Standard Drawing shown in Note 3 for closures at construction limits.
8. Cover traffic route and informational signs when in conflict with detour.
9. Maintain access for emergency vehicles or coordinate with City for emergency detour routes.

OBEC CONSULTING ENGINEERS
CORPORATE OFFICE:
920 COUNTRY CLUB ROAD,
SUITE 100B
EUGENE, OREGON 97401-6089
www.obec.com

CITY PROJECT NUMBER P21080

NO.	DATE	REVISION	BY

DESIGNED: S. Aldridge
DRAWN: OBEC CAD
CHECKED: M. Sweeney
APPROVED: WHH

REGISTERED PROFESSIONAL ENGINEER 12295 OREGON JULY 15, 1986 JEROME DOUGLAS LANE
EXPIRES 12/31/14

SCALE VERT: AS SHOWN HORIZ: AS SHOWN
NOTICE
0 1
IF THIS BAR DOES NOT MEASURE 1" THEN DRAWING IS NOT TO SCALE

PROJECT NAME: CITY OF SPRINGFIELD, OREGON
FRANKLIN/McVAY SANITARY SEWER EXTENSION
PROJECT NUMBER P21080

SHEET TITLE: TEMPORARY TRAFFIC CONTROL DETAILS

MSA
Murray, Smith & Associates, Inc.
Engineers/Planners
121 S.W. Salmon, Suite 900
Portland, Oregon 97204
PHONE 503-225-9010
FAX 503-225-9022

MSA PROJECT: 13-1469.201 DATE: APRIL 2014

C:\obec\pwobec01\d0137544\13-1469-202-OR-OBEC TCP 1.dwg SHT NO 4/21/2014 5:28 PM SWOLFER 18.2s (LMS Tech)

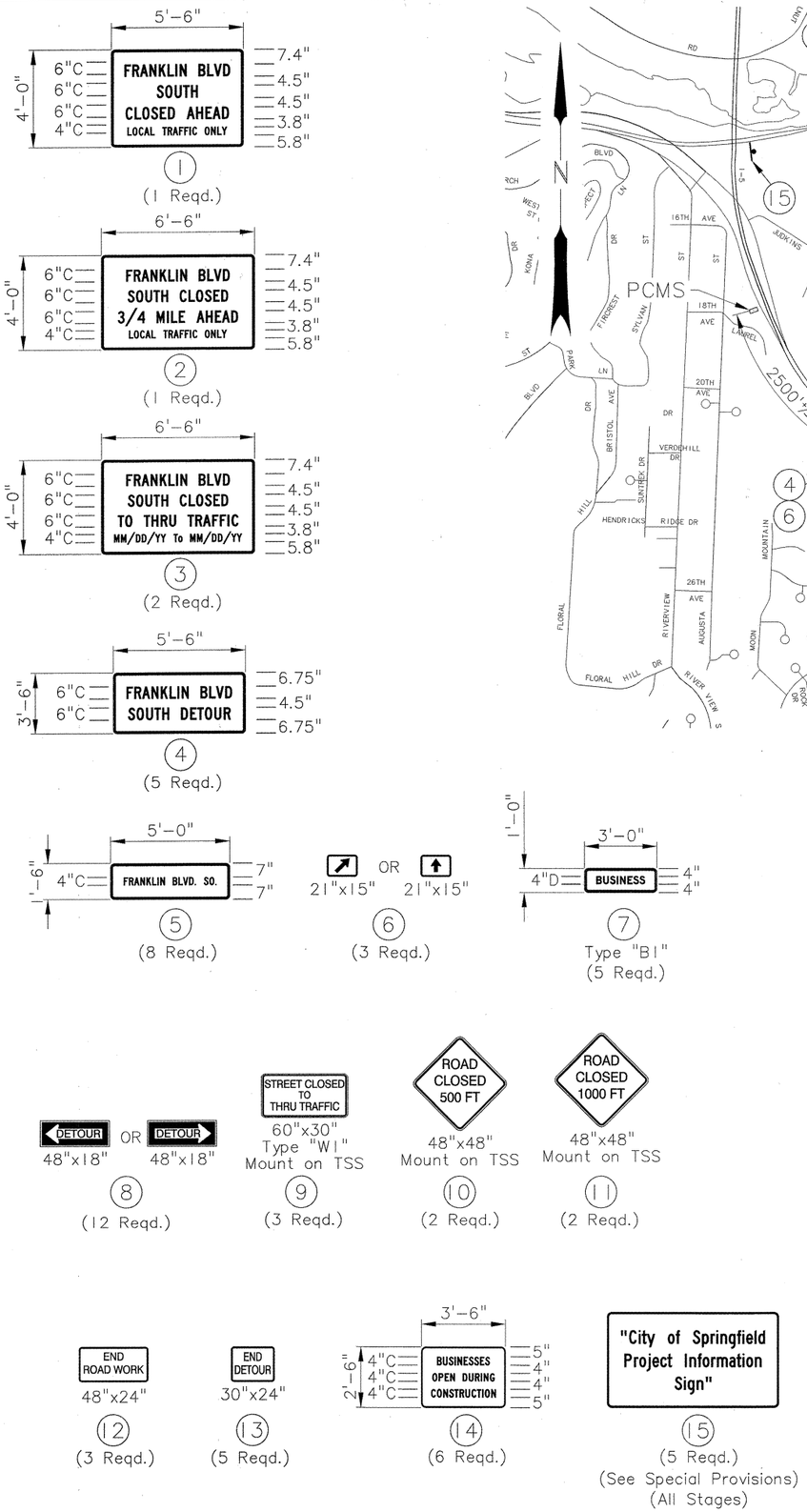

ALTERNATING SIGN LEGEND

SOUTH FRANKLIN CLOSED	USE EXIT 191

PORTABLE CHANGEABLE MESSAGE SIGN
(Suggested message)
(Locate as directed)

LEGEND

- ● ● ● ● ● Regional Detour
- ○ ○ ○ ○ ○ Business Detour
- Sign On Post
- Temp. Sign Support (TSS)

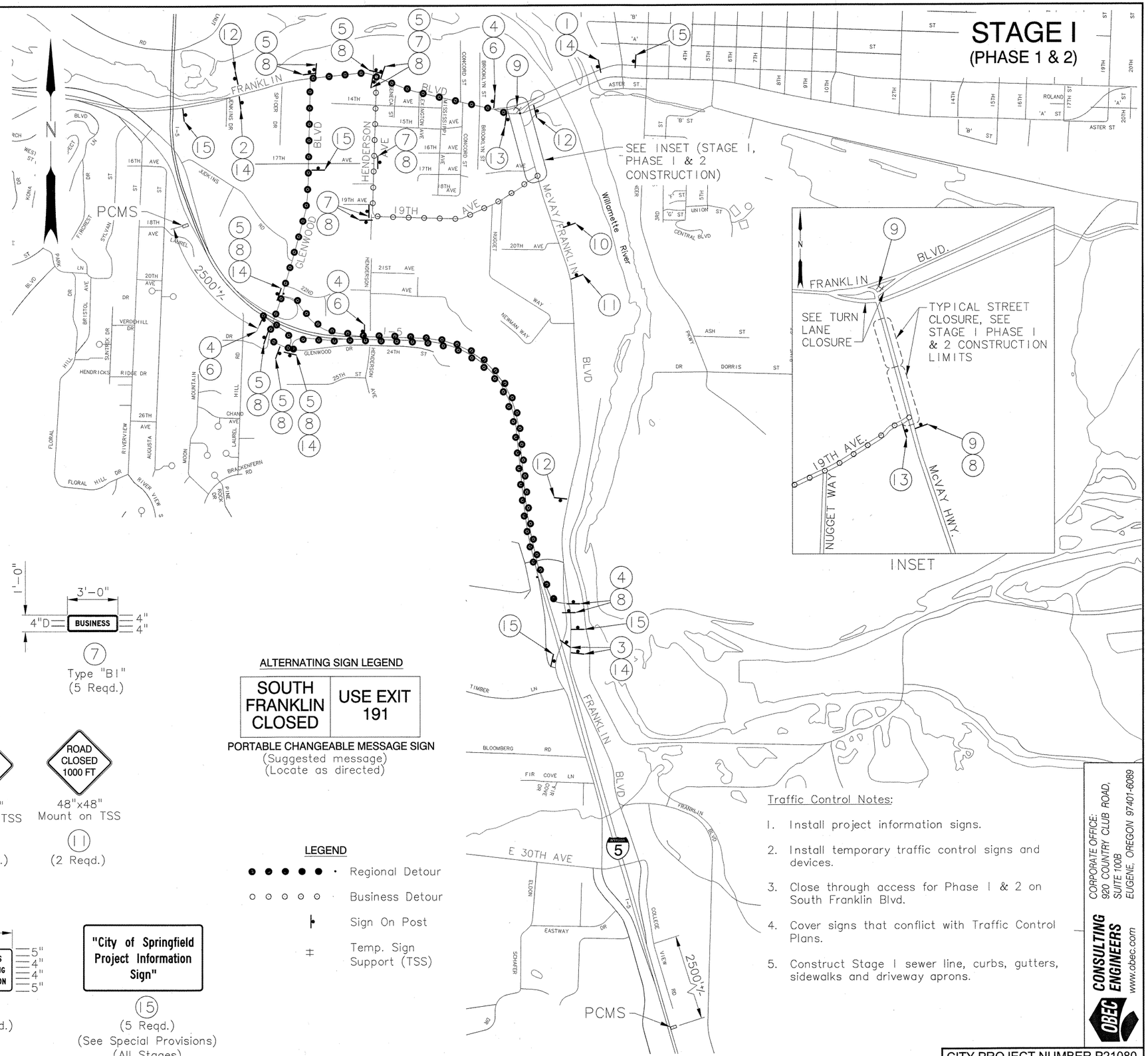

Traffic Control Notes:

1. Install project information signs.
2. Install temporary traffic control signs and devices.
3. Close through access for Phase I & 2 on South Franklin Blvd.
4. Cover signs that conflict with Traffic Control Plans.
5. Construct Stage I sewer line, curbs, gutters, sidewalks and driveway aprons.

OBEC CONSULTING ENGINEERS
CORPORATE OFFICE:
920 COUNTRY CLUB ROAD,
SUITE 100B
EUGENE, OREGON 97401-6089
www.obec.com

CITY PROJECT NUMBER P21080

NO.	DATE	REVISION	BY

DESIGNED: S. Aldridge
DRAWN: OBEC CAD
CHECKED: M. Sweeney
APPROVED: WHH

REGISTERED PROFESSIONAL ENGINEER 12295 OREGON JAN. 15, 1982 JEROME DOUGLAS LANE
EXPIRES: 12/31/14

SCALE VERT: AS SHOWN HORIZ: AS SHOWN
NOTICE
IF THIS BAR DOES NOT MEASURE 1" THEN DRAWING IS NOT TO SCALE

PROJECT NAME: CITY OF SPRINGFIELD, OREGON
FRANKLIN/McVAY SANITARY SEWER EXTENSION
PROJECT NUMBER P21080

SHEET TITLE: STAGE I CONSTRUCTION TEMPORARY TRAFFIC CONTROL DETOUR

MSA Murray, Smith & Associates, Inc. Engineers/Planners
121 S.W. Salmon, Suite 900 Portland, Oregon 97204
PHONE 503-225-9010
FAX 503-225-9022

MSA PROJECT: 13-1469.201 DATE: APRIL 2014

C:\obec\pwobec01\d0137544\13-1469-202-OR-OBEC TCP 2.dwg SHT NO 4/22/2014 10:52 AM SWOLFER 18.2s (LMS Tech)

FRANKLIN BLVD
SOUTH
CLOSED AHEAD
LOCAL TRAFFIC ONLY

(1)

FRANKLIN BLVD
SOUTH CLOSED
3/4 MILE AHEAD
LOCAL TRAFFIC ONLY

(2)

FRANKLIN BLVD
SOUTH CLOSED
TO THRU TRAFFIC
MM/DD/YY To MM/DD/YY

(3)

FRANKLIN BLVD
SOUTH DETOUR

(4)

FRANKLIN BLVD. SO.

(5)

OR

(6)

DETOUR OR DETOUR

(7)

STREET CLOSED TO THRU TRAFFIC
Mount on TSS
(8)

ROAD CLOSED 500 FT
Mount on TSS
(9)

ROAD CLOSED 1000 FT
Mount on TSS
(10)

END ROAD WORK
(11)

END DETOUR
(12)

BUSINESSES OPEN DURING CONSTRUCTION
(13)

ALTERNATING SIGN LEGEND

SOUTH FRANKLIN CLOSED	USE EXIT 191

PORTABLE CHANGEABLE MESSAGE SIGN
(Suggested message)
(Locate as directed)

Note: See Stage I for sign details & quantities not shown

LEGEND

- ● ● ● ● ● ● ● Regional Detour
- ○ ○ ○ ○ ○ ○ ○ Business Detour
- Sign On Post
- Temp. Sign Support (TSS)

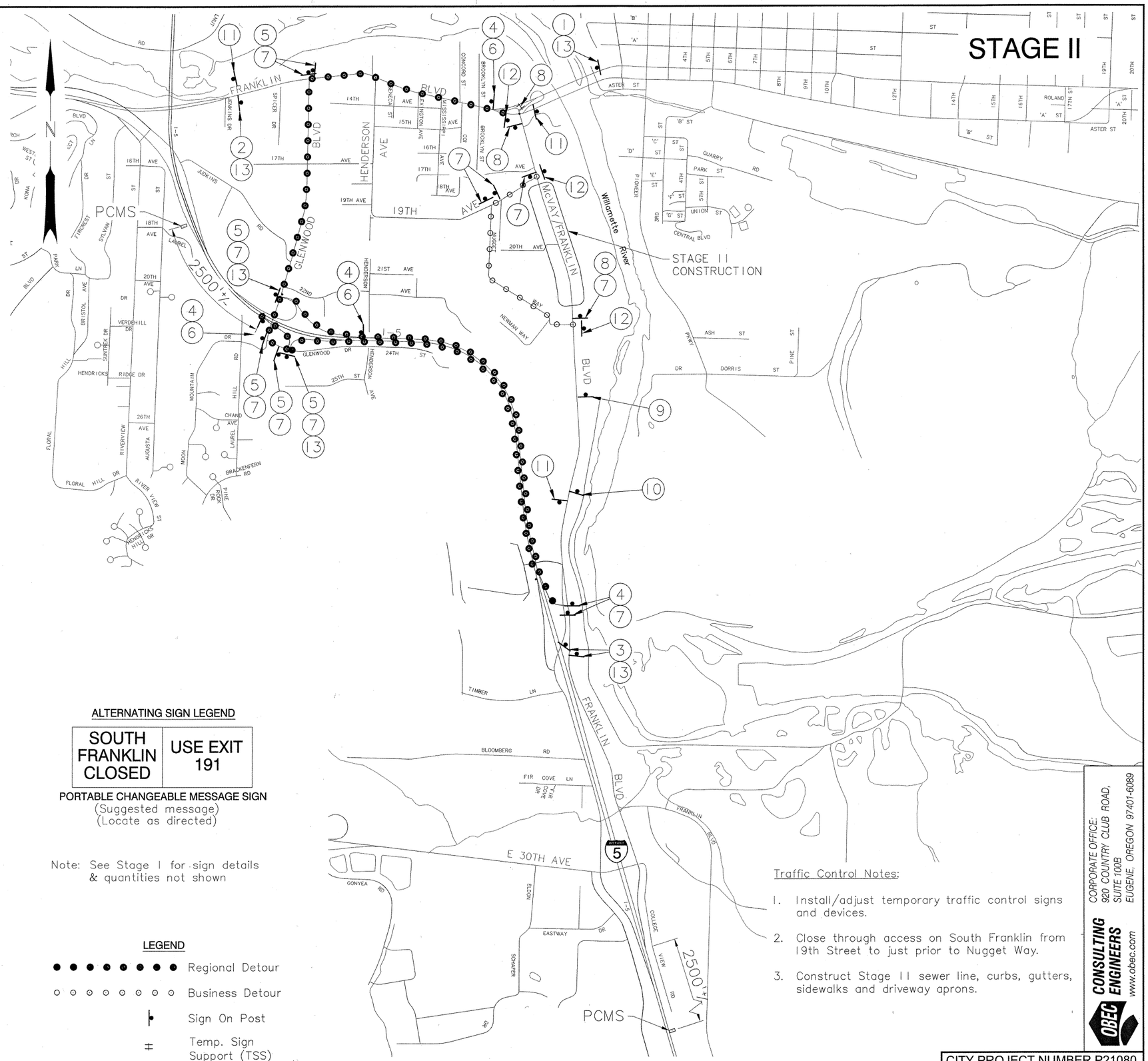

Traffic Control Notes:

1. Install/adjust temporary traffic control signs and devices.
2. Close through access on South Franklin from 19th Street to just prior to Nugget Way.
3. Construct Stage II sewer line, curbs, gutters, sidewalks and driveway aprons.

OBEC CONSULTING ENGINEERS
CORPORATE OFFICE:
920 COUNTRY CLUB ROAD,
SUITE 100B
EUGENE, OREGON 97401-6089
www.obec.com

CITY PROJECT NUMBER P21080

NO.	DATE	REVISION	BY

DESIGNED: S. Aldridge
DRAWN: OBEC CAD
CHECKED: M Sweeney
APPROVED: WHH

REGISTERED PROFESSIONAL ENGINEER
OREGON
12295
JULY 15, 1980
JEROME DOUGLAS LANE
EXPIRES: 12/31/14

SCALE
VERT: AS SHOWN
HORZ: AS SHOWN
NOTICE
IF THIS BAR DOES NOT MEASURE 1" THEN DRAWING IS NOT TO SCALE

PROJECT NAME:
CITY OF SPRINGFIELD, OREGON
FRANKLIN/McVAY SANITARY SEWER EXTENSION
PROJECT NUMBER P21080

SHEET TITLE:
STAGE II CONSTRUCTION
TEMPORARY TRAFFIC
CONTROL DETOUR

MSA
Murray, Smith & Associates, Inc.
Engineers/Planners
121 S.W. Salmon, Suite 900
Portland, Oregon 97204
PHONE 503-225-9010
FAX 503-225-9022

MSA PROJECT: 13-1469.201
DATE: APRIL 2014

C:\obec\pwobec01\d0137544\13-1469-202-OR-OBEC TCP 3.dwg SHT NO 4/22/2014 10:12 AM SWOLFER 18.2s (LMS Tech)

FRANKLIN BLVD
SOUTH
CLOSED AHEAD
LOCAL TRAFFIC ONLY
(1)

FRANKLIN BLVD
SOUTH CLOSED
3/4 MILE AHEAD
LOCAL TRAFFIC ONLY
(2)

FRANKLIN BLVD
SOUTH CLOSED
TO THRU TRAFFIC
MM/DD/YY To MM/DD/YY
(3)

FRANKLIN BLVD
SOUTH DETOUR
(4)

FRANKLIN BLVD. SO. (5) OR (6)

DETOUR OR DETOUR
(7)

STREET CLOSED TO THRU TRAFFIC
Mount on TSS
(8)

ROAD CLOSED 500 FT
Mount on TSS
(9)

ROAD CLOSED 1000 FT
Mount on TSS
(10)

END ROAD WORK
(11)

END DETOUR
(12)

BUSINESSES OPEN DURING CONSTRUCTION
(13)

Note: See Stage I for sign details & quantities not shown

STAGE III

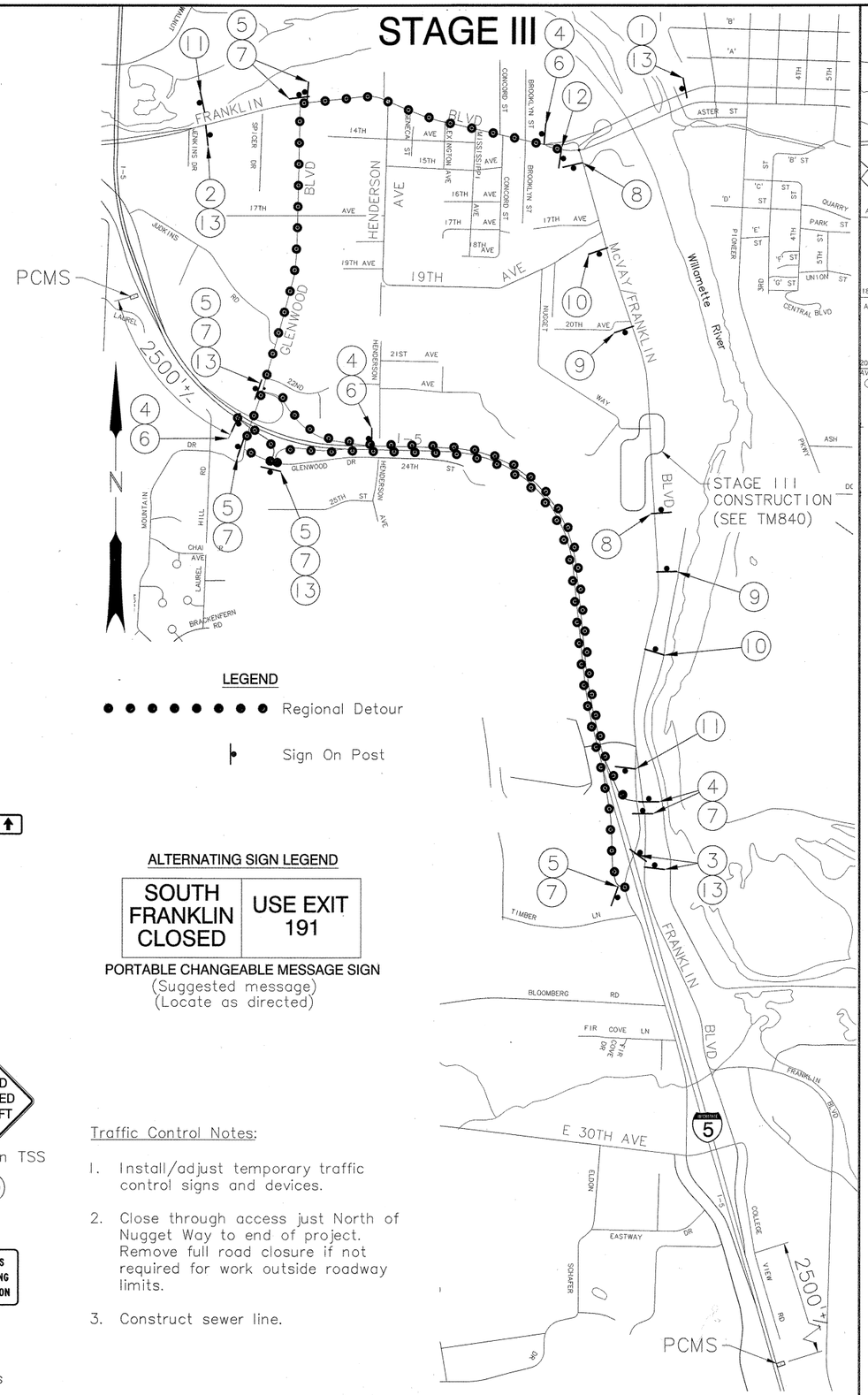

LEGEND

● ● ● ● ● ● ● ● Regional Detour

Sign On Post

ALTERNATING SIGN LEGEND

SOUTH FRANKLIN CLOSED	USE EXIT 191

PORTABLE CHANGEABLE MESSAGE SIGN
(Suggested message)
(Locate as directed)

Traffic Control Notes:

1. Install/adjust temporary traffic control signs and devices.
2. Close through access just North of Nugget Way to end of project. Remove full road closure if not required for work outside roadway limits.
3. Construct sewer line.

STAGE IV

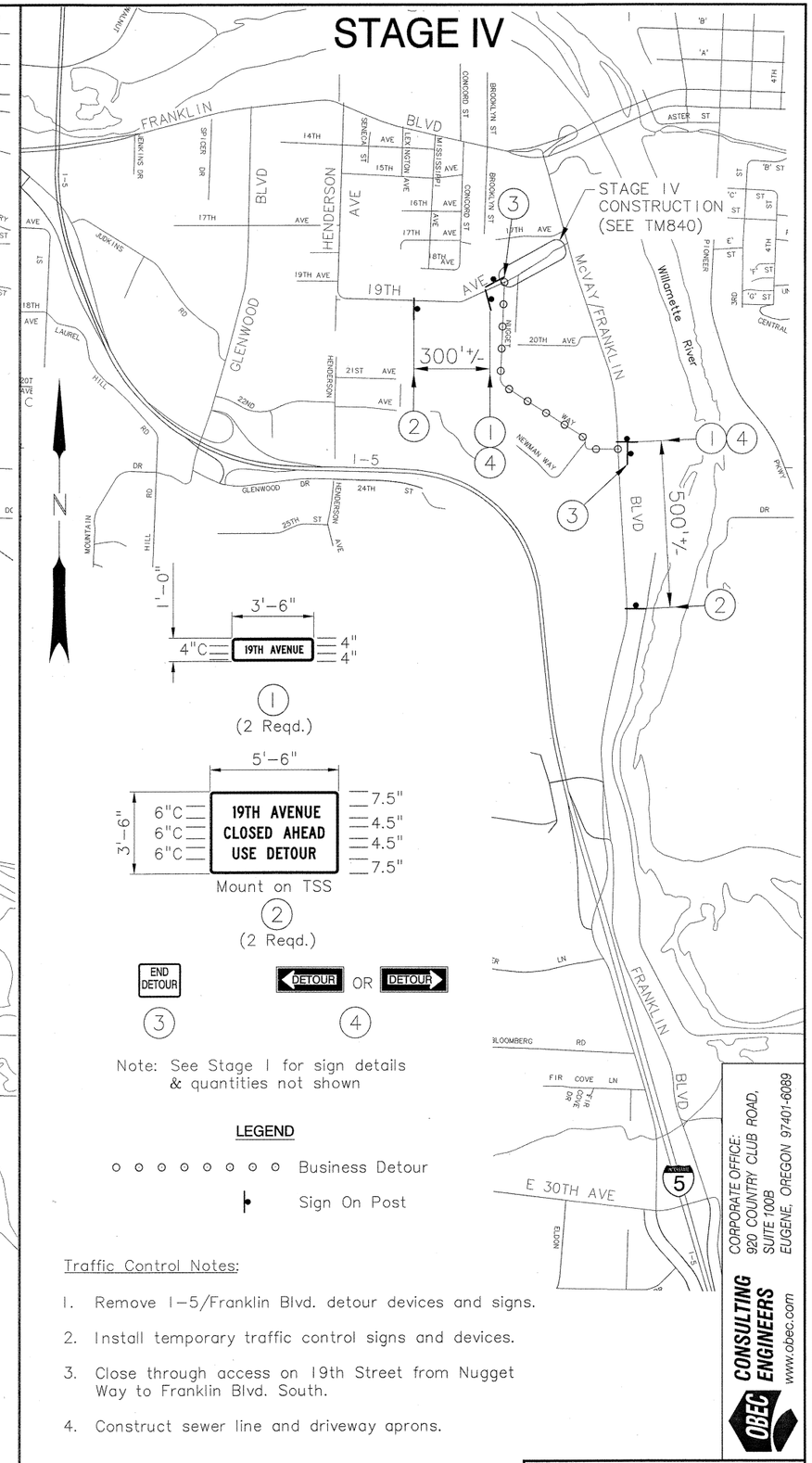

1'-0"
3'-6"
4"C 19TH AVENUE 4" 4"
(1)
(2 Reqd.)

5'-6"
3'-6"
6"C 6"C 6"C
19TH AVENUE CLOSED AHEAD USE DETOUR
7.5" 4.5" 4.5" 7.5"
Mount on TSS
(2)
(2 Reqd.)

END DETOUR
(3)

DETOUR OR DETOUR
(4)

Note: See Stage I for sign details & quantities not shown

LEGEND

○ ○ ○ ○ ○ ○ ○ ○ Business Detour

Sign On Post

Traffic Control Notes:

1. Remove I-5/Franklin Blvd. detour devices and signs.
2. Install temporary traffic control signs and devices.
3. Close through access on 19th Street from Nugget Way to Franklin Blvd. South.
4. Construct sewer line and driveway aprons.

CITY PROJECT NUMBER P21080

OBEC CONSULTING ENGINEERS
CORPORATE OFFICE:
920 COUNTRY CLUB ROAD,
SUITE 100B
EUGENE, OREGON 97401-6089
www.obec.com

NO.	DATE	REVISION	BY

DESIGNED: S. Aldridge
DRAWN: OBEC CAD
CHECKED: M. Sweeney
APPROVED: WHH

REGISTERED PROFESSIONAL ENGINEER OREGON 12295 JULY 15, 1997 JEROME DOUGLAS LANE
EXPIRES: 12/31/14

SCALE VERT: AS SHOWN HORIZ: AS SHOWN
NOTICE
IF THIS BAR DOES NOT MEASURE 1" THEN DRAWING IS NOT TO SCALE

PROJECT NAME: CITY OF SPRINGFIELD, OREGON
FRANKLIN/McVAY SANITARY SEWER EXTENSION
PROJECT NUMBER P21080

SHEET TITLE: STAGE III & IV CONSTRUCTION
TEMPORARY TRAFFIC
CONTROL DETOUR

MSA
Murray, Smith & Associates, Inc.
Engineers/Planners
121 S.W. Salmon, Suite 900 Portland, Oregon 97204
PHONE 503-225-9010 FAX 503-225-9022

MSA PROJECT: 13-1469.201 DATE: APRIL 2014

C:\obec\pwobec01\d0137544\13-1469-202-OR-OBEC TCP 4.dwg SHT NO 4/22/2014 10:55 AM SWOLFER 18.2s (LMS Tech)

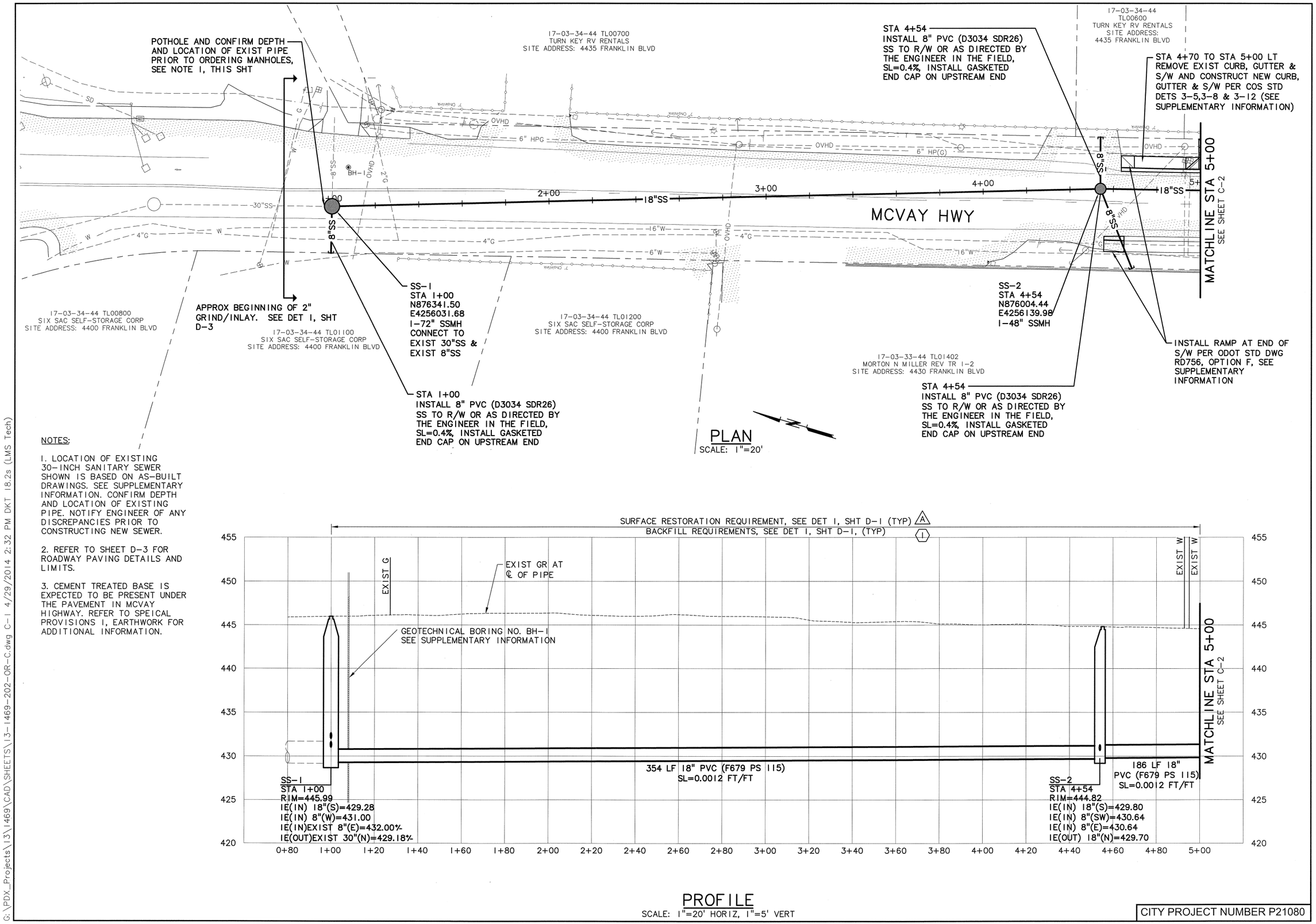

NOTES:

1. LOCATION OF EXISTING 30-INCH SANITARY SEWER SHOWN IS BASED ON AS-BUILT DRAWINGS. SEE SUPPLEMENTARY INFORMATION. CONFIRM DEPTH AND LOCATION OF EXISTING PIPE. NOTIFY ENGINEER OF ANY DISCREPANCIES PRIOR TO CONSTRUCTING NEW SEWER.

2. REFER TO SHEET D-3 FOR ROADWAY PAVING DETAILS AND LIMITS.

3. CEMENT TREATED BASE IS EXPECTED TO BE PRESENT UNDER THE PAVEMENT IN MCVAY HIGHWAY. REFER TO SPEICAL PROVISIONS 1, EARTHWORK FOR ADDITIONAL INFORMATION.

CITY PROJECT NUMBER P21080

NO.	DATE	REVISION	BY

REGISTERED PROFESSIONAL ENGINEER 17140 OREGON SUSAN M. GREEN RENEWS 12-31-14

DESIGNED: SMG
DRAWN: DAK
CHECKED: WSE
APPROVED: WHH

SCALE VERT: AS SHOWN HORIZ: AS SHOWN

NOTICE
0 1
IF THIS BAR DOES NOT MEASURE 1" THEN DRAWING IS NOT TO SCALE

C-1
10 OF 30

PROJECT NAME: CITY OF SPRINGFIELD, OREGON
FRANKLIN/McVAY SANITARY SEWER EXTENSION
PROJECT NUMBER P21080

SHEET TITLE: PLAN AND PROFILE - STA 1+00 TO STA 5+00

MSA Murray, Smith & Associates, Inc. Engineers/Planners
121 S.W. Salmon, Suite 900 Portland, Oregon 97204
PHONE 503-225-9010
FAX 503-225-0022

MSA PROJECT: 13-1469.201 DATE: MAY 2014

G:\PDX_Projects\13\1469\CAD\SHEETS\13-1469-202-OR-C.dwg C-1 4/29/2014 2:32 PM DKT 18.2s (LMS Tech)

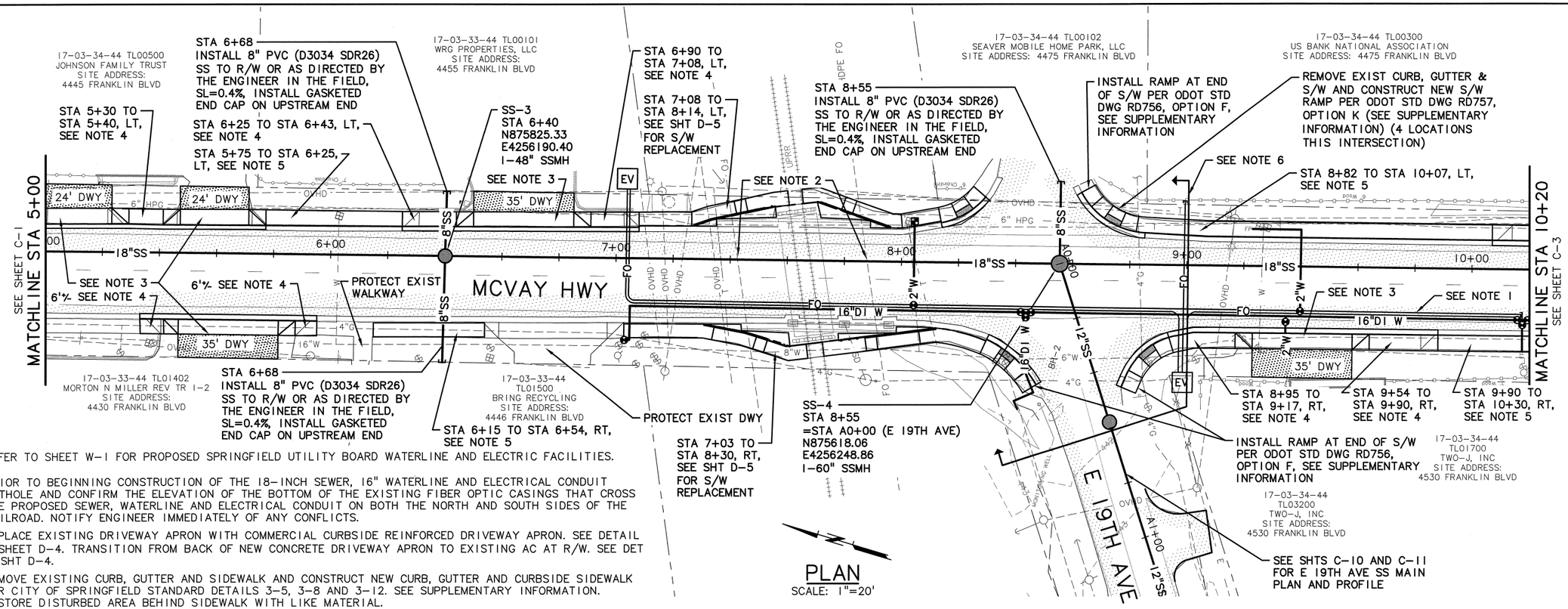

PLAN
SCALE: 1"=20'

NOTES:

1. REFER TO SHEET W-1 FOR PROPOSED SPRINGFIELD UTILITY BOARD WATERLINE AND ELECTRIC FACILITIES.
2. PRIOR TO BEGINNING CONSTRUCTION OF THE 18-INCH SEWER, 16" WATERLINE AND ELECTRICAL CONDUIT POTHOLE AND CONFIRM THE ELEVATION OF THE BOTTOM OF THE EXISTING FIBER OPTIC CASINGS THAT CROSS THE PROPOSED SEWER, WATERLINE AND ELECTRICAL CONDUIT ON BOTH THE NORTH AND SOUTH SIDES OF THE RAILROAD. NOTIFY ENGINEER IMMEDIATELY OF ANY CONFLICTS.
3. REPLACE EXISTING DRIVEWAY APRON WITH COMMERCIAL CURBSIDE REINFORCED DRIVEWAY APRON. SEE DETAIL 1, SHEET D-4. TRANSITION FROM BACK OF NEW CONCRETE DRIVEWAY APRON TO EXISTING AC AT R/W. SEE DET 2, SHT D-4.
4. REMOVE EXISTING CURB, GUTTER AND SIDEWALK AND CONSTRUCT NEW CURB, GUTTER AND CURBSIDE SIDEWALK PER CITY OF SPRINGFIELD STANDARD DETAILS 3-5, 3-8 AND 3-12. SEE SUPPLEMENTARY INFORMATION. RESTORE DISTURBED AREA BEHIND SIDEWALK WITH LIKE MATERIAL.
5. REMOVE EXISTING SIDEWALK AND CONSTRUCT NEW CURBSIDE SIDEWALK PER CITY OF SPRINGFIELD STANDARD DETAIL 3-12. SEE SUPPLEMENTARY INFORMATION. PROTECT EXISTING CURB AND GUTTER. RESTORE DISTURBED AREA BEHIND SIDEWALK WITH LIKE MATERIAL.
6. APPROXIMATE LIMITS OF CONSTRUCTION TO BE COMPLETED BY SEPTEMBER 29, 2014. SEE SPECIAL PROVISIONS B, PARAGRAPH B1.48.
7. REFER TO SHEET D-3 FOR ROADWAY PAVING DETAILS AND LIMITS.

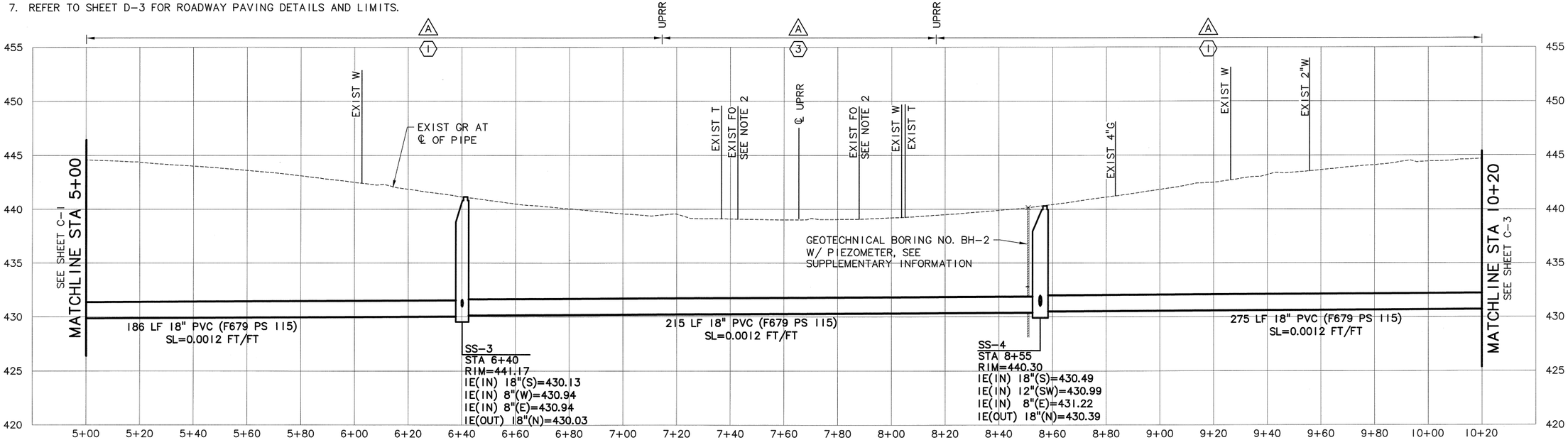

PROFILE
SCALE: 1"=20' HORIZ, 1"=5' VERT

CITY PROJECT NUMBER P21080

NO.	DATE	REVISION	BY

DESIGNED: SMG
DRAWN: DAK
CHECKED: WSE
APPROVED: WHH

REGISTERED PROFESSIONAL ENGINEER
OREGON
17140
SUSAN M. GUTH
RENEWS 12-31-14

SCALE VERT: AS SHOWN HORIZ: AS SHOWN

NOTICE
0 1
IF THIS BAR DOES NOT MEASURE 1" THIS DRAWING IS NOT TO SCALE

PROJECT NAME: CITY OF SPRINGFIELD, OREGON
FRANKLIN/McVAY SANITARY SEWER EXTENSION
PROJECT NUMBER P21080

SHEET TITLE: PLAN AND PROFILE - STA 5+00 TO STA 10+20

C-2
11 OF 30

Murray, Smith & Associates, Inc.
Engineers/Planners
121 S.W. Salmon, Suite 900 Portland, Oregon 97204
PHONE 503-225-9010
FAX 503-225-9022

MSA PROJECT: 13-1469.201
DATE: MAY 2014

G:\PDX_Projects\13\1469\CAD\SHEETS\13-1469-202-OR-C.dwg C-2 4/29/2014 2:32 PM DKT 18.2s (LMS Tech)

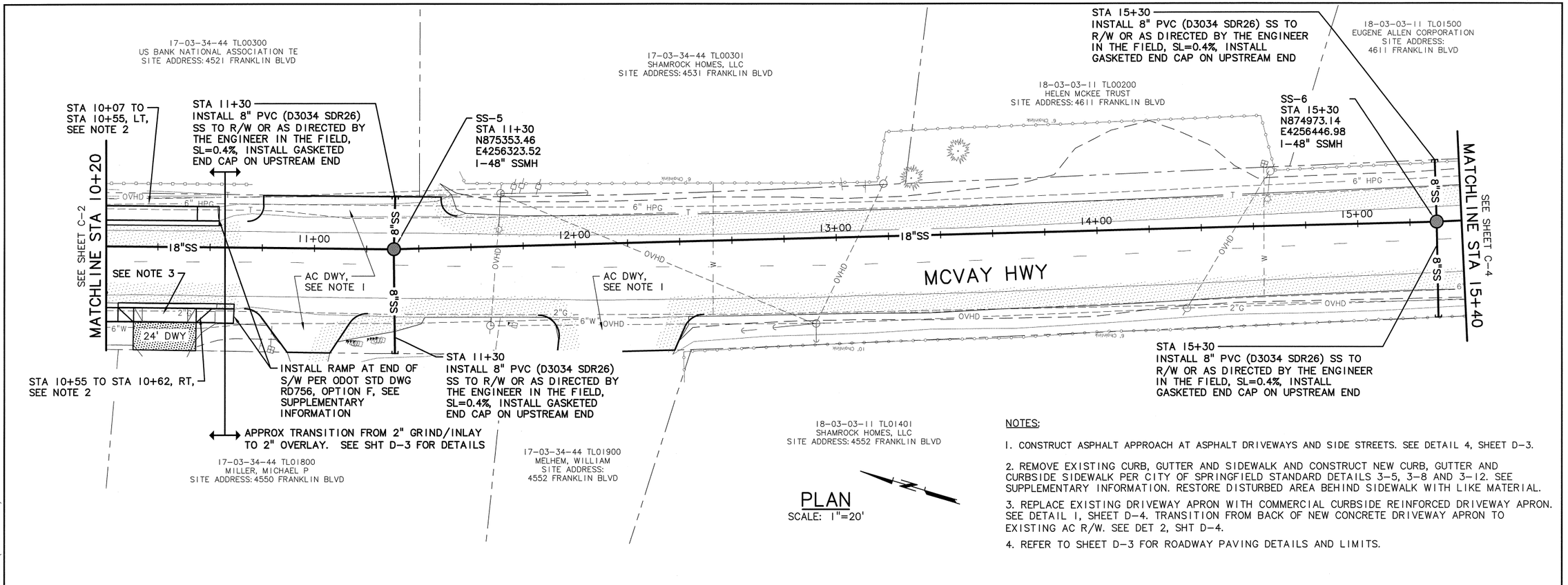

PLAN
SCALE: 1"=20'

NOTES:

1. CONSTRUCT ASPHALT APPROACH AT ASPHALT DRIVEWAYS AND SIDE STREETS. SEE DETAIL 4, SHEET D-3.
2. REMOVE EXISTING CURB, GUTTER AND SIDEWALK AND CONSTRUCT NEW CURB, GUTTER AND CURBSIDE SIDEWALK PER CITY OF SPRINGFIELD STANDARD DETAILS 3-5, 3-8 AND 3-12. SEE SUPPLEMENTARY INFORMATION. RESTORE DISTURBED AREA BEHIND SIDEWALK WITH LIKE MATERIAL.
3. REPLACE EXISTING DRIVEWAY APRON WITH COMMERCIAL CURBSIDE REINFORCED DRIVEWAY APRON. SEE DETAIL 1, SHEET D-4. TRANSITION FROM BACK OF NEW CONCRETE DRIVEWAY APRON TO EXISTING AC R/W. SEE DET 2, SHT D-4.
4. REFER TO SHEET D-3 FOR ROADWAY PAVING DETAILS AND LIMITS.

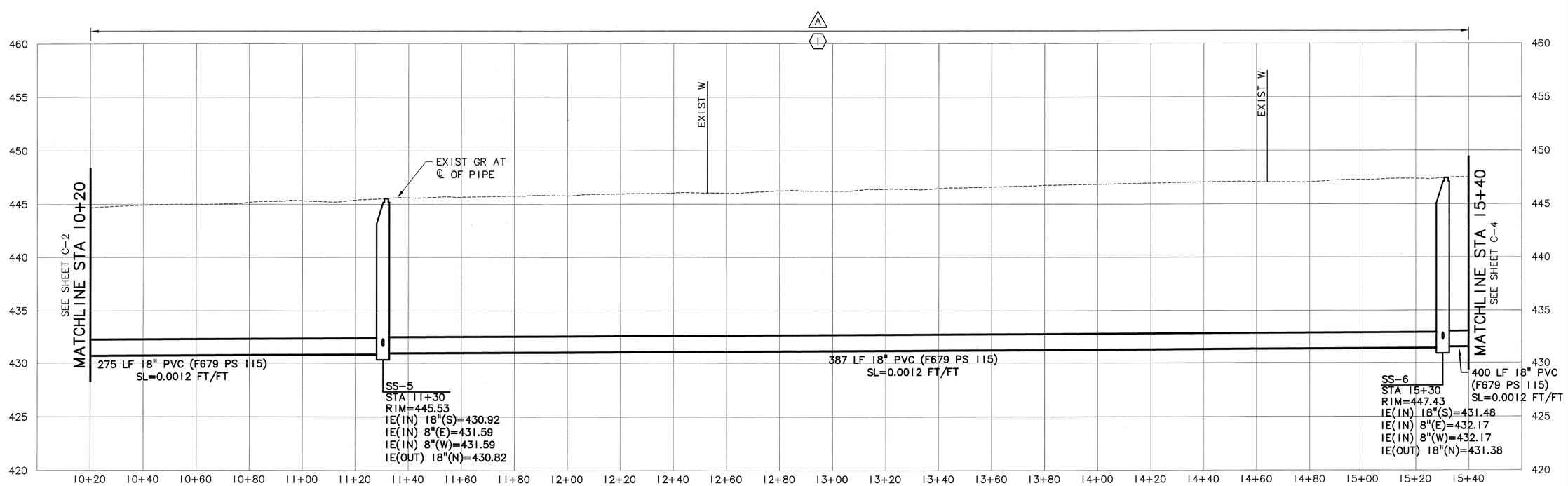

PROFILE
SCALE: 1"=20' HORIZ, 1"=5' VERT

CITY PROJECT NUMBER P21080

NO.	DATE	REVISION	BY

DESIGNED: SMG
DRAWN: DAK
CHECKED: WSE
APPROVED: WHH

C-3
12 OF 30

REGISTERED PROFESSIONAL ENGINEER 17140 OREGON JULY 11, 1989 SUSAN M. GREGG
RENEWS 12-31-14

SCALE VERT: AS SHOWN HORIZ: AS SHOWN
NOTICE
0 1
IF THIS BAR DOES NOT MEASURE 1", THEN DRAWING IS NOT TO SCALE

PROJECT NAME: CITY OF SPRINGFIELD, OREGON
FRANKLIN/McVAY SANITARY SEWER EXTENSION
PROJECT NUMBER P21080

SHEET TITLE: PLAN AND PROFILE - STA 10+20 TO STA 15+40

MSA
Murray, Smith & Associates, Inc.
Engineers/Planners
121 S.W. Salmon, Suite 900 Portland, Oregon 97204
PHONE 503-225-9010
FAX 503-225-9022

MSA PROJECT: 13-1469.201 DATE: MAY 2014

G:\PDX_Projects\13\1469\CAD\SHEETS\13-1469-202-OR-C.dwg C-3 4/29/2014 2:32 PM DKT 18.2s (LMS Tech)

NOTES:

1. CONSTRUCT ASPHALT APPROACH AT ASPHALT DRIVEWAYS AND SIDE STREETS. SEE DETAIL 4, SHEET D-3.

2. REFER TO SHEET D-3 FOR ROADWAY PAVING DETAILS AND LIMITS.

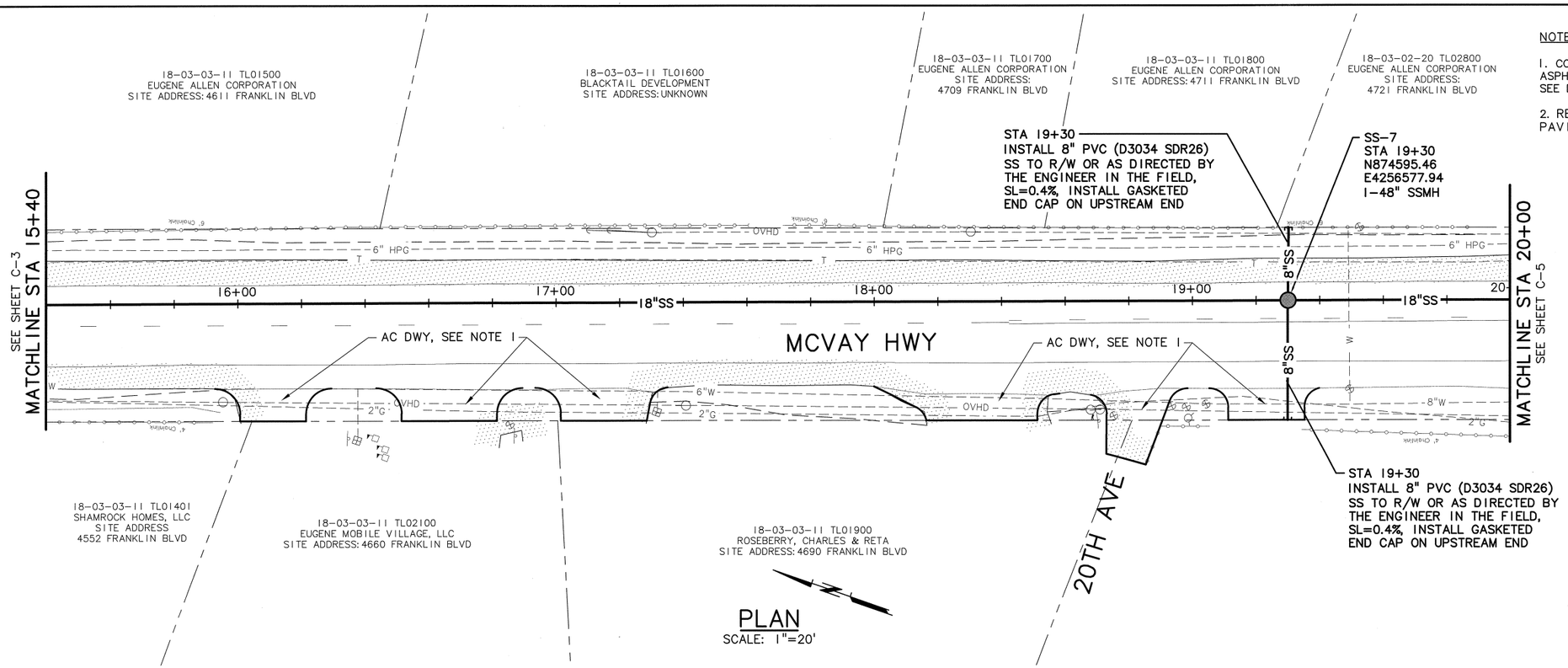

PLAN
SCALE: 1"=20'

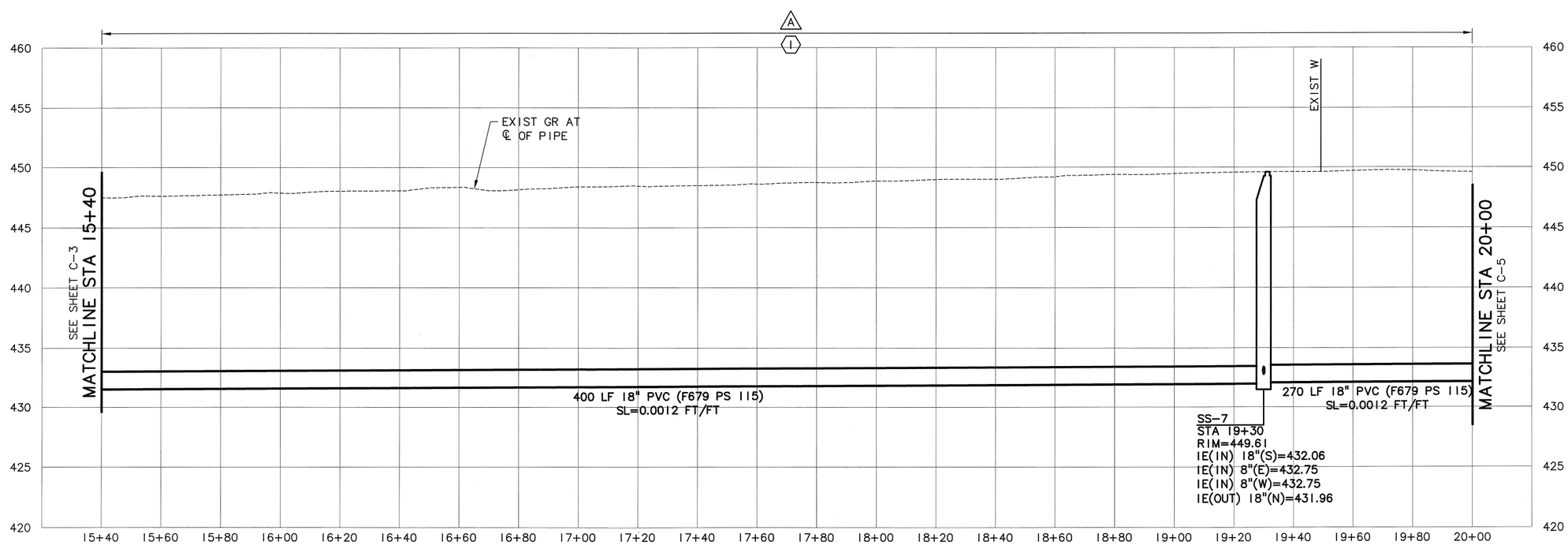

PROFILE
SCALE: 1"=20' HORIZ, 1"=5' VERT

CITY PROJECT NUMBER P21080

NO.	DATE	REVISION	BY

DESIGNED: SMG
DRAWN: DAK
CHECKED: WSE
APPROVED: WHH

C-4
13 OF 30

REGISTERED PROFESSIONAL ENGINEER 17140 OREGON MAY 11, 1988 SUSAN M. SHIGA
RENEWS 12-31-14

SCALE
VERT: AS SHOWN
HORIZ: AS SHOWN

NOTICE
0 1
IF THIS BAR DOES NOT MEASURE 1" THEN DRAWING IS NOT TO SCALE

PROJECT NAME:
CITY OF SPRINGFIELD, OREGON
FRANKLIN/McVAY SANITARY SEWER EXTENSION
PROJECT NUMBER P21080

SHEET TITLE:
PLAN AND PROFILE - STA 15+40 TO STA 20+00

MSA
Murray, Smith & Associates, Inc.
Engineers/Planners
121 S.W. Salmon, Suite 900 Portland, Oregon 97204
PHONE 503-225-9010
FAX 503-225-9022

MSA PROJECT: 13-1469.201
DATE: MAY 2014

G:\PDX_Projects\13\1469\CAD\SHEETS\13-1469-202-OR-C.dwg C-4 4/29/2014 2:32 PM DKT 18.2s (LMS Tech)

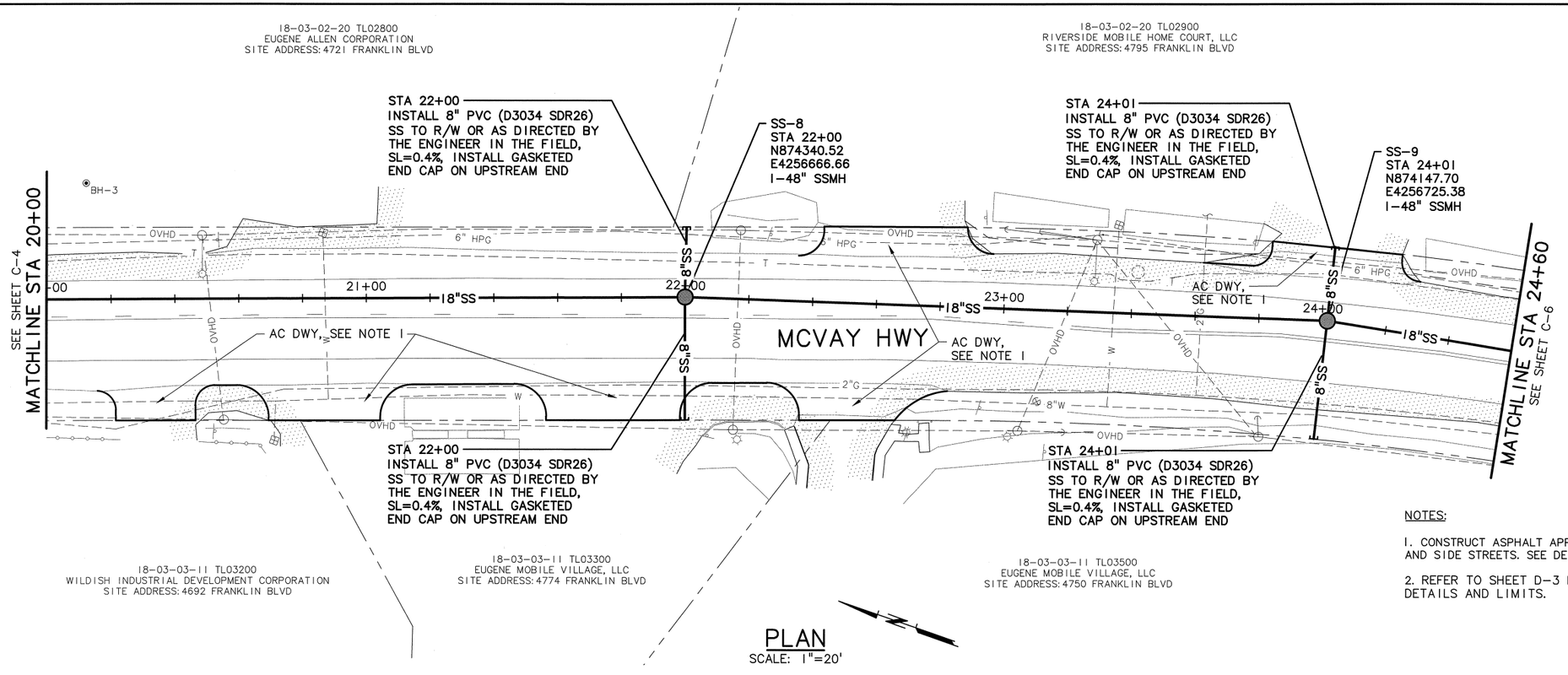

PLAN
SCALE: 1"=20'

NOTES:

1. CONSTRUCT ASPHALT APPROACH AT ASPHALT DRIVEWAYS AND SIDE STREETS. SEE DETAIL 4, SHEET D-3.

2. REFER TO SHEET D-3 FOR ROADWAY PAVING DETAILS AND LIMITS.

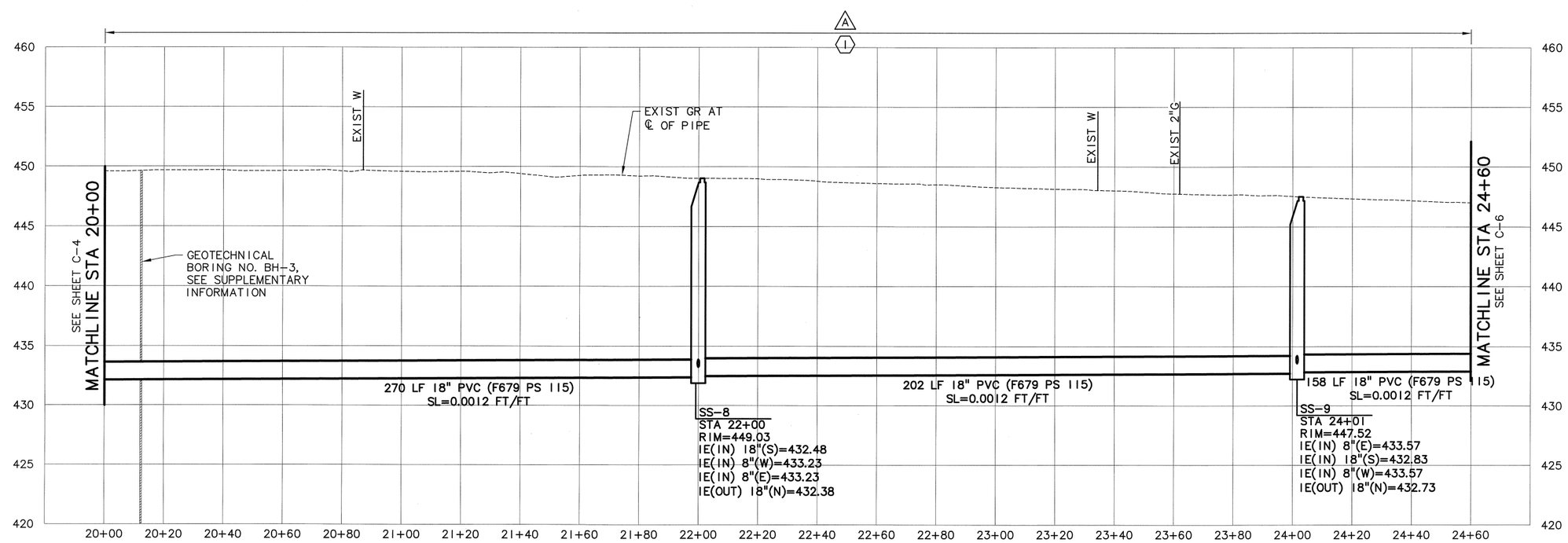

PROFILE
SCALE: 1"=20' HORIZ, 1"=5' VERT

CITY PROJECT NUMBER P21080

NO.	DATE	REVISION	BY

DESIGNED: SMG
DRAWN: DAK
CHECKED: WSE
APPROVED: WHH

REGISTERED PROFESSIONAL ENGINEER 17140 OREGON JULY 18, 1989 SUSAN M. GREEN
RENEWS 12-31-14

SCALE VERT: AS SHOWN HORIZ: AS SHOWN
NOTICE
0 1
IF THIS BAR DOES NOT MEASURE 1" THEN DRAWING IS NOT TO SCALE

PROJECT NAME: CITY OF SPRINGFIELD, OREGON
FRANKLIN/McVAY SANITARY SEWER EXTENSION
PROJECT NUMBER P21080

SHEET TITLE: PLAN AND PROFILE - STA 20+00 TO STA 24+60

C-5
14 OF 30

MSA
Murray, Smith & Associates, Inc.
Engineers/Planners
121 S.W. Salmon, Suite 900 Portland, Oregon 97204
PHONE 503-225-9010
FAX 503-225-9022

MSA PROJECT: 13-1469.201
DATE: MAY 2014

G:\PDX_Projects\13\1469\CAD\SHEETS\13-1469-202-OR-C.dwg C-5 4/29/2014 2:32 PM DKT 18.2s (LMS Tech)

NOTES:

1. CONSTRUCT ASPHALT APPROACH AT ASPHALT DRIVEWAYS AND SIDE STREETS. SEE DETAIL 4, SHEET D-3.

2. REFER TO SHEET D-3 FOR ROADWAY PAVING DETAILS AND LIMITS.

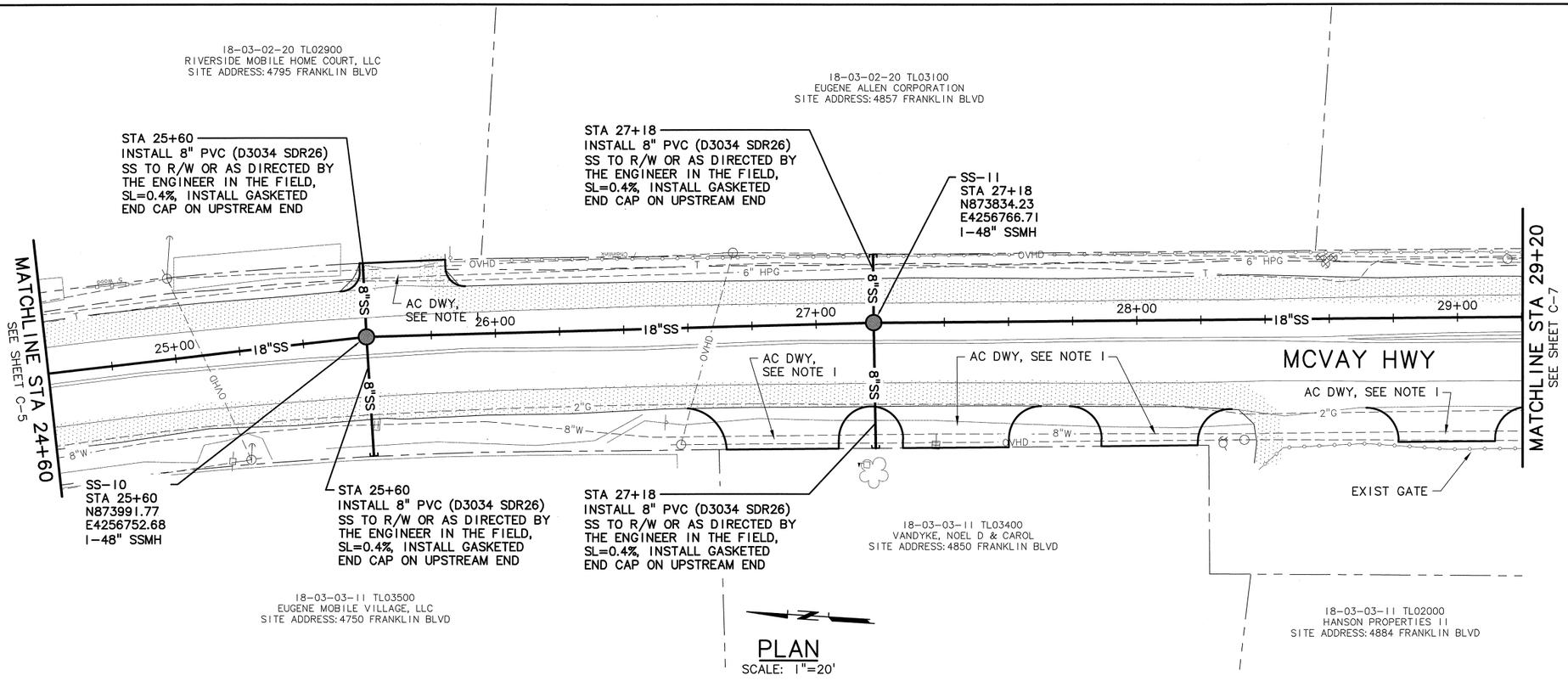

PLAN
SCALE: 1"=20'

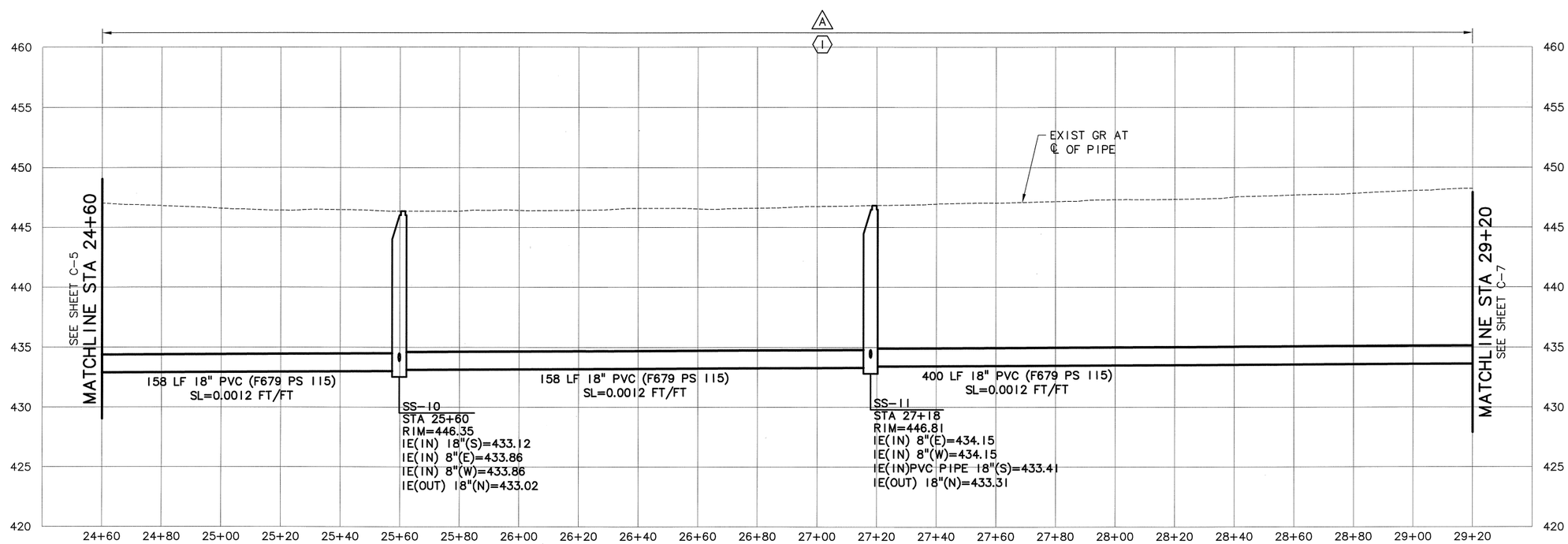

PROFILE
SCALE: 1"=20' HORIZ, 1"=5' VERT

CITY PROJECT NUMBER P21080

NO.	DATE	REVISION	BY

DESIGNED: SMG
DRAWN: DAK
CHECKED: WSE
APPROVED: WHH

C-6
15 OF 30

REGISTERED PROFESSIONAL ENGINEER 17140 OREGON SUSAN M. GUTHRIE RENEWS 12-31-14

SCALE
VERT: AS SHOWN
HORIZ: AS SHOWN

NOTICE
0 1
IF THIS BAR DOES NOT MEASURE 1" THE DRAWING IS NOT TO SCALE

PROJECT NAME: CITY OF SPRINGFIELD, OREGON
FRANKLIN/McVAY SANITARY SEWER EXTENSION
PROJECT NUMBER P21080

SHEET TITLE: PLAN AND PROFILE - STA 24+60 TO STA 29+20

MSA
Murray, Smith & Associates, Inc.
Engineers/Planners
121 S.W. Salmon, Suite 900 Portland, Oregon 97204
PHONE 503-225-9010
FAX 503-225-9022

MSA PROJECT: 13-1469.201
DATE: MAY 2014

G:\PDX_Projects\13\1469\CAD\SHEETS\13-1469-202-OR-C.dwg C-6 4/29/2014 2:32 PM DKT 18.2s (LMS Tech)

NOTES:

1. CONSTRUCT ASPHALT APPROACH AT ASPHALT DRIVEWAYS AND SIDE STREETS. SEE DETAIL 4, SHEET D-3.

2. REFER TO SHEET D-3 FOR ROADWAY PAVING DETAILS AND LIMITS.

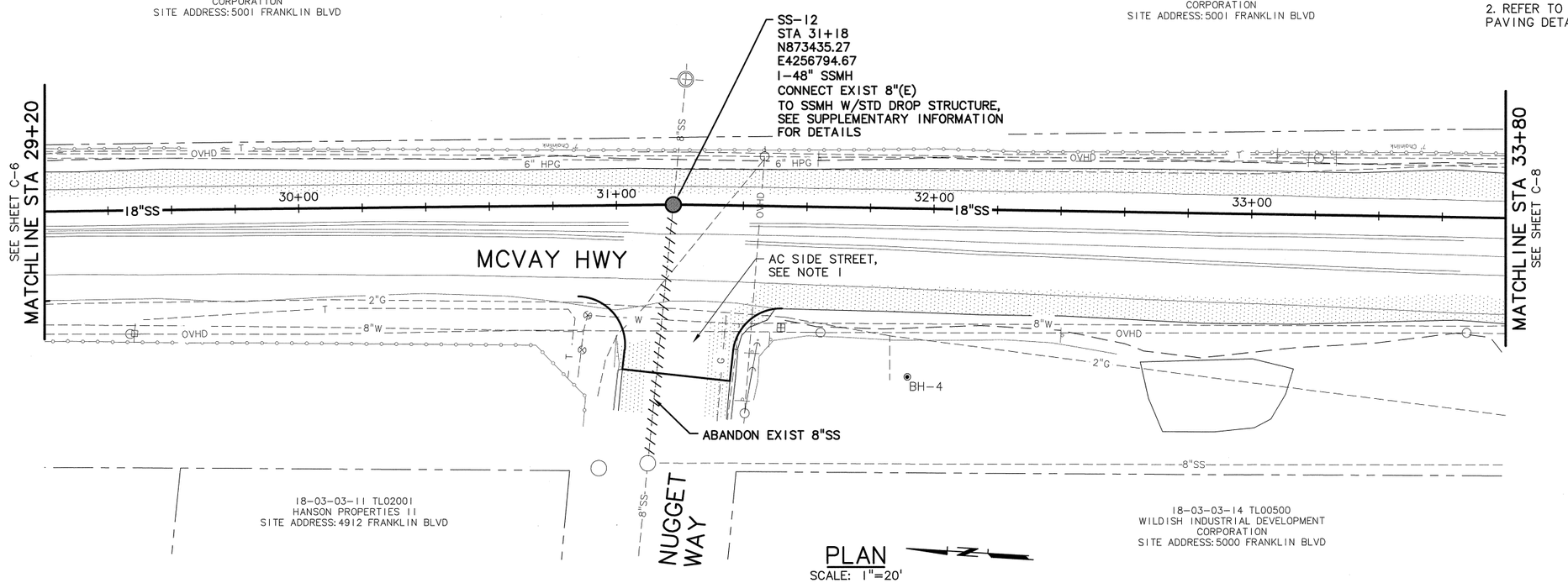

PLAN
SCALE: 1"=20'

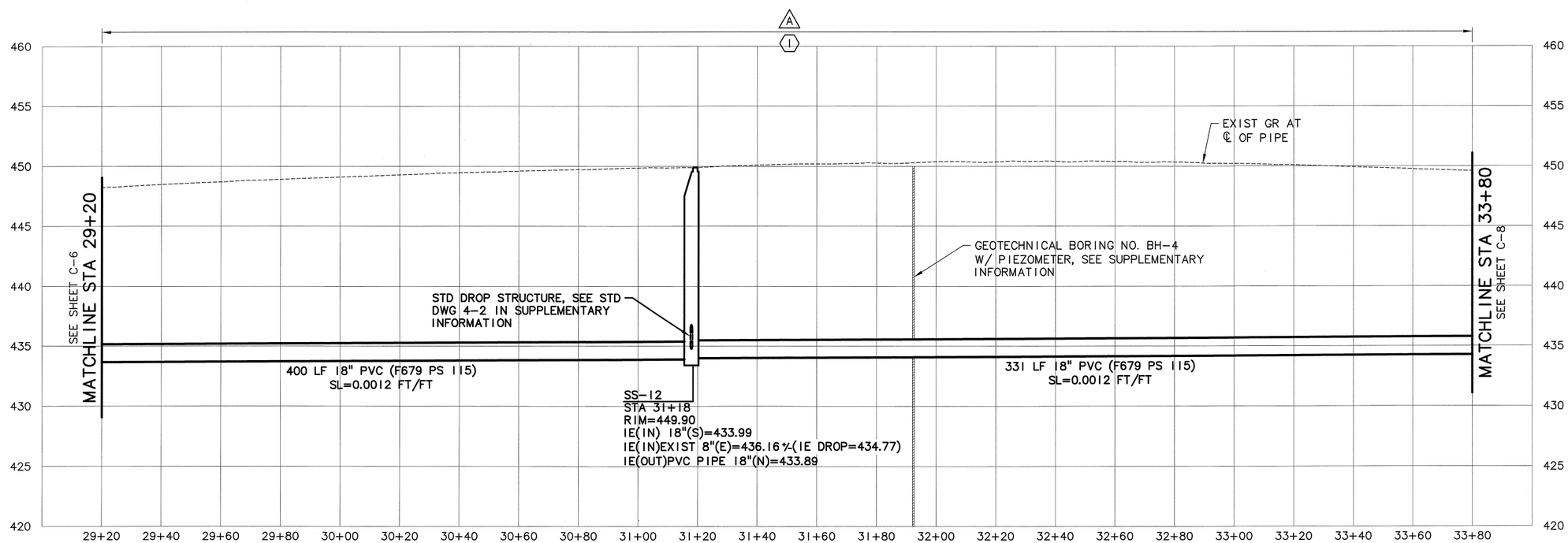

PROFILE
SCALE: 1"=20' HORIZ, 1"=5' VERT

CITY PROJECT NUMBER P21080

NO.	DATE	REVISION	BY

DESIGNED: SMG
DRAWN: DAK
CHECKED: WSE
APPROVED: WHH

C-7
16 OF 30

REGISTERED PROFESSIONAL ENGINEER 17140 OREGON MAY 21, 1986 SUSAN M. GILLIGAN
RENEWS 12-31-14

SCALE VERT: AS SHOWN HORIZ: AS SHOWN
NOTICE
0 1
IF THIS BAR DOES NOT MEASURE 1" THEN DRAWING IS NOT TO SCALE

PROJECT NAME: CITY OF SPRINGFIELD, OREGON
FRANKLIN/McVAY SANITARY SEWER EXTENSION
PROJECT NUMBER P21080

SHEET TITLE: PLAN AND PROFILE - STA 29+20 TO STA 33+80

MSA
Murray, Smith & Associates, Inc.
Engineers/Planners
121 S.W. Salmon, Suite 900 Portland, Oregon 97204
PHONE 503-225-9010
FAX 503-225-9022

MSA PROJECT: 13-1469.201 DATE: MAY 2014

G:\PDX_Projects\13\1469\CAD\SHEETS\13-1469-202-OR-C.dwg C-7 4/29/2014 2:32 PM DKT 18.2s (LMS Tech)

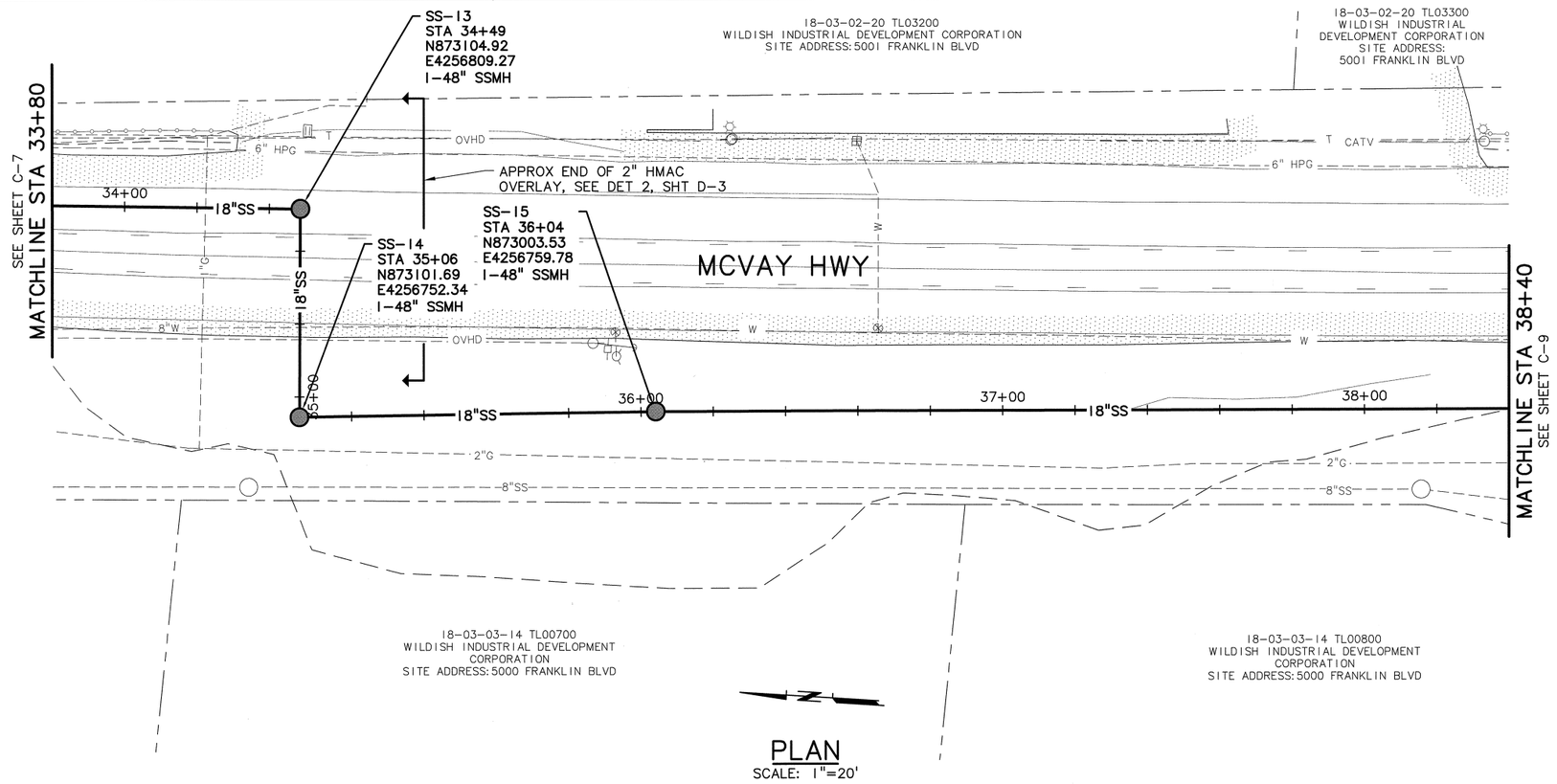

PLAN
SCALE: 1"=20'

NOTES:

1. REFER TO SHEET D-3 FOR ROADWAY PAVING DETAILS AND LIMITS.

2. REOPEN ROADWAY TO THROUGH TRAFFIC ONCE 18" SS IS CONSTRUCTED TO STA 35+00.

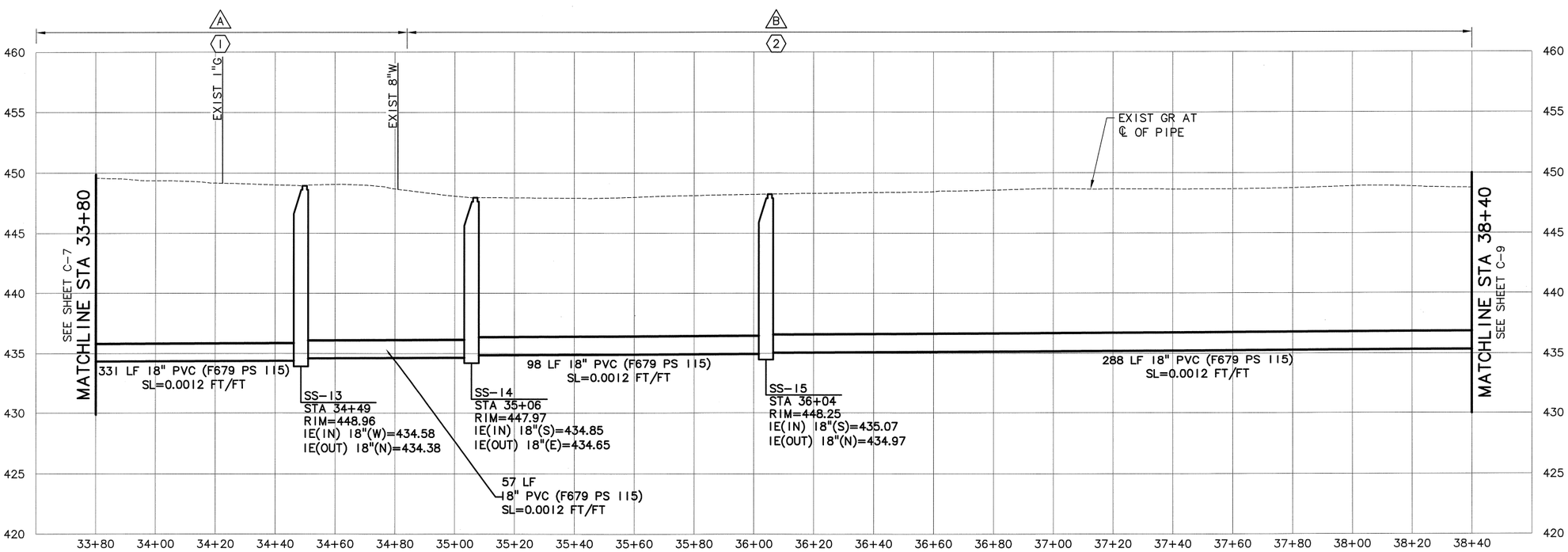

PROFILE
SCALE: 1"=20' HORIZ, 1"=5' VERT

CITY PROJECT NUMBER P21080

NO.	DATE	REVISION	BY

DESIGNED: SMG
DRAWN: DAK
CHECKED: WSE
APPROVED: WHH

C-8
17 OF 30

REGISTERED PROFESSIONAL ENGINEER 17140 OREGON MAY 11, 1982 WILLIAM H. SHEPA
RENEWS 12-31-14

SCALE
VERT: AS SHOWN
HORIZ: AS SHOWN

NOTICE
0 1
IF THIS BAR DOES NOT MEASURE 1" THE DRAWING IS NOT TO SCALE

PROJECT NAME:
CITY OF SPRINGFIELD, OREGON
FRANKLIN/McVAY SANITARY SEWER EXTENSION
PROJECT NUMBER P21080

SHEET TITLE:
PLAN AND PROFILE - STA 33+80 TO STA 38+40

MSA
Murray, Smith & Associates, Inc.
Engineers/Planners
121 S.W. Salmon, Suite 900 Portland, Oregon 97204
PHONE 503-225-9010
FAX 503-225-9022

MSA PROJECT: 13-1469.201
DATE: MAY 2014

G:\PDX_Projects\13\1469\CAD\SHEETS\13-1469-202-OR-C.dwg C-8 4/29/2014 2:32 PM DKT 18.2s (LMS Tech)

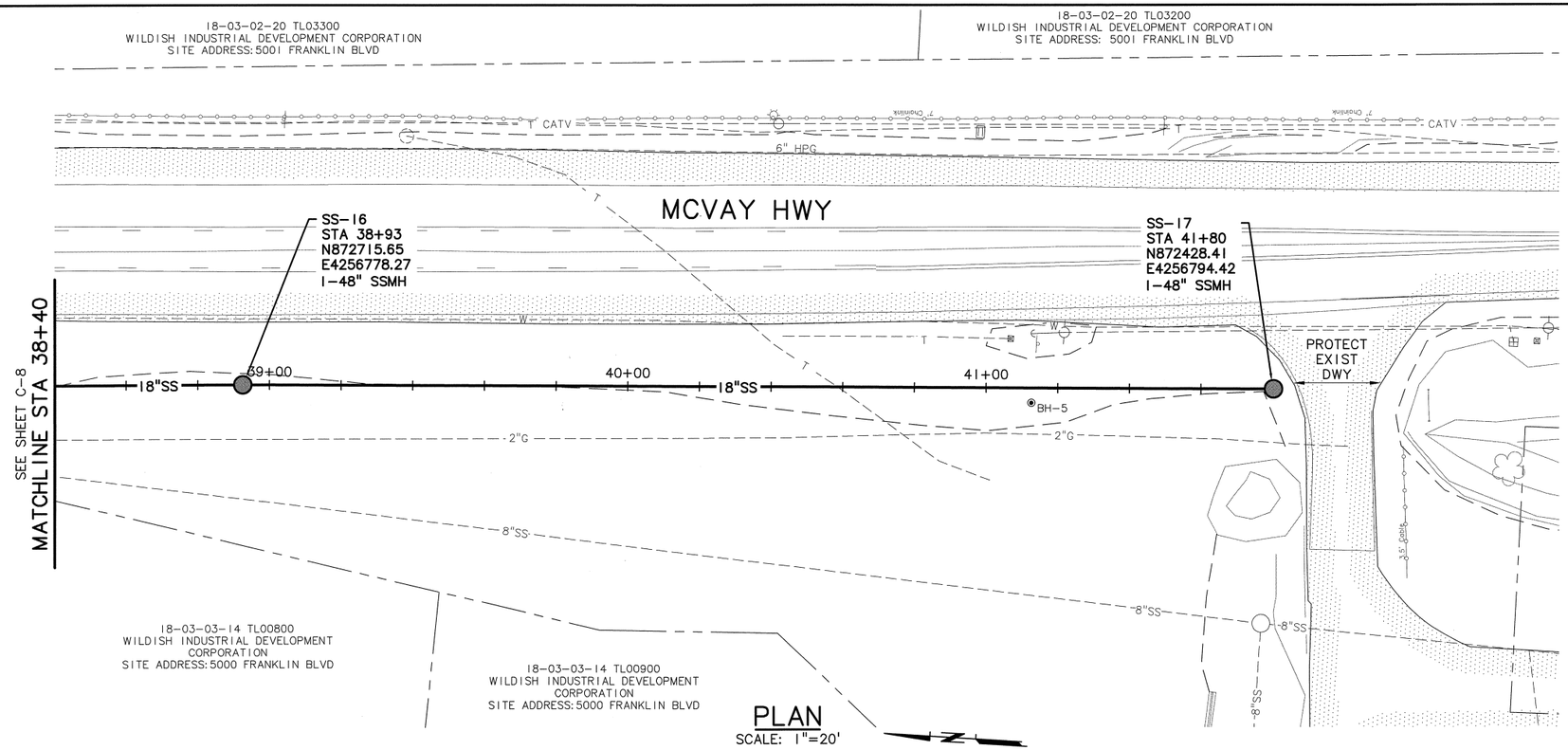

PLAN
SCALE: 1"=20'

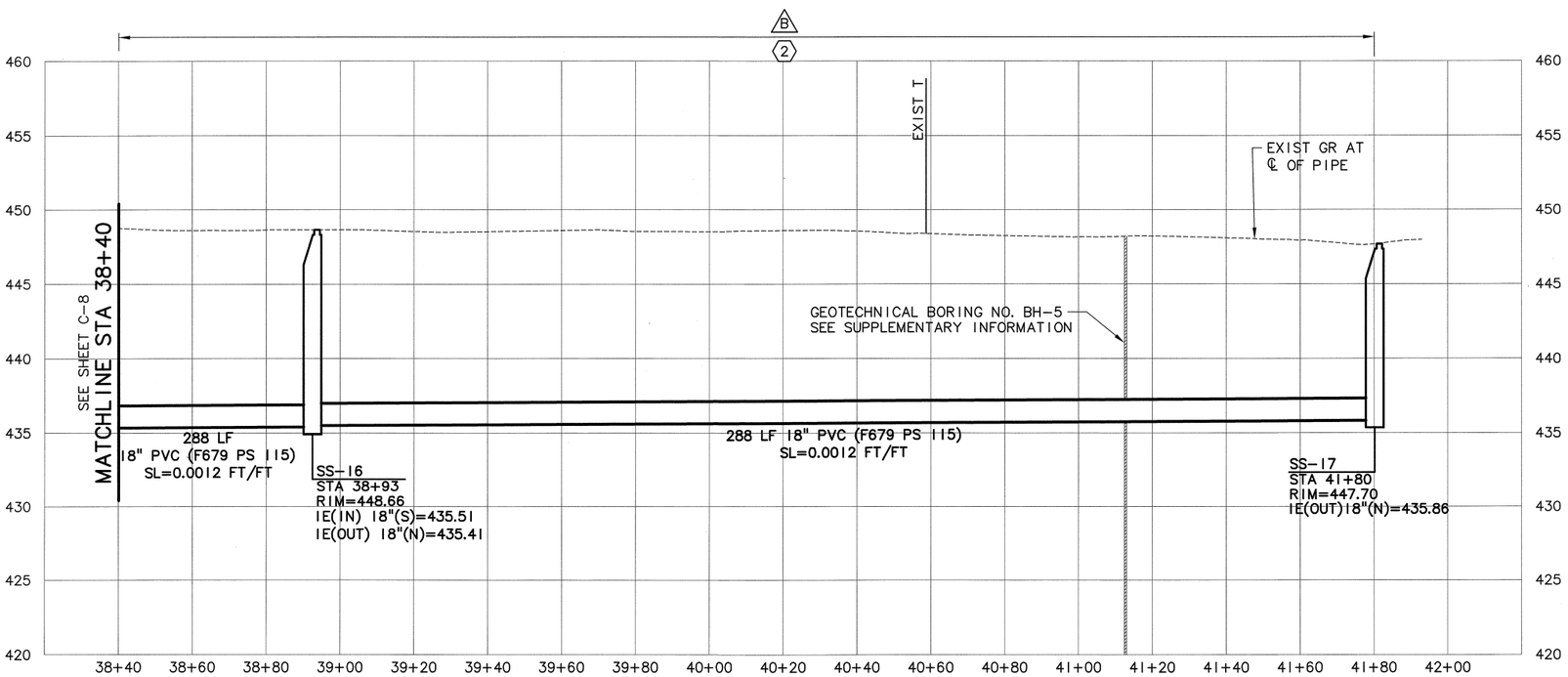

PROFILE
SCALE: 1"=20' HORIZ, 1"=5' VERT

CITY PROJECT NUMBER P21080

NO.	DATE	REVISION	BY

DESIGNED: SMG
DRAWN: DAK
CHECKED: WSE
APPROVED: WHH

C-9
18 OF 30

REGISTERED PROFESSIONAL ENGINEER 17140 OREGON MAY 11, 1988 SUSAN M. GILES
RENEWS 12-31-14

VERT: AS SHOWN
HORIZ: AS SHOWN
SCALE

NOTICE
0 1
IF THIS BAR DOES NOT MEASURE 1" THE DRAWING IS NOT TO SCALE

PROJECT NAME:
CITY OF SPRINGFIELD, OREGON
FRANKLIN/McVAY SANITARY SEWER EXTENSION
PROJECT NUMBER P21080

SHEET TITLE:
PLAN AND PROFILE - STA 38+40 TO STA 41+80

MSA
Murray, Smith & Associates, Inc.
Engineers/Planners
121 S.W. Salmon, Suite 900
Portland, Oregon 97204
PHONE 503-225-9010
FAX 503-225-9022

MSA PROJECT: 13-1469.201
DATE: MAY 2014

G:\PDX_Projects\13\1469\CAD\SHEETS\13-1469-202-OR-C.dwg C-9 4/29/2014 2:32 PM DKT 18.2s (LMS Tech)

NOTES:

1. CONSTRUCT ASPHALT APPROACH AT ASPHALT DRIVEWAYS AND SIDE STREETS. SEE DETAIL 4, SHEET D-3.

2. REFER TO SHEET D-3 FOR ROADWAY PAVING DETAILS AND LIMITS.

3. APPROXIMATE LIMITS OF CONSTRUCTION TO BE COMPLETED BY SEPTEMBER 29, 2014. SEE SPECIAL PROVISIONS B, PARAGRAPH B1.48.

4. REFER TO SHEET W-1 FOR SUB-WATER AND ELECTRIC FACILITIES.

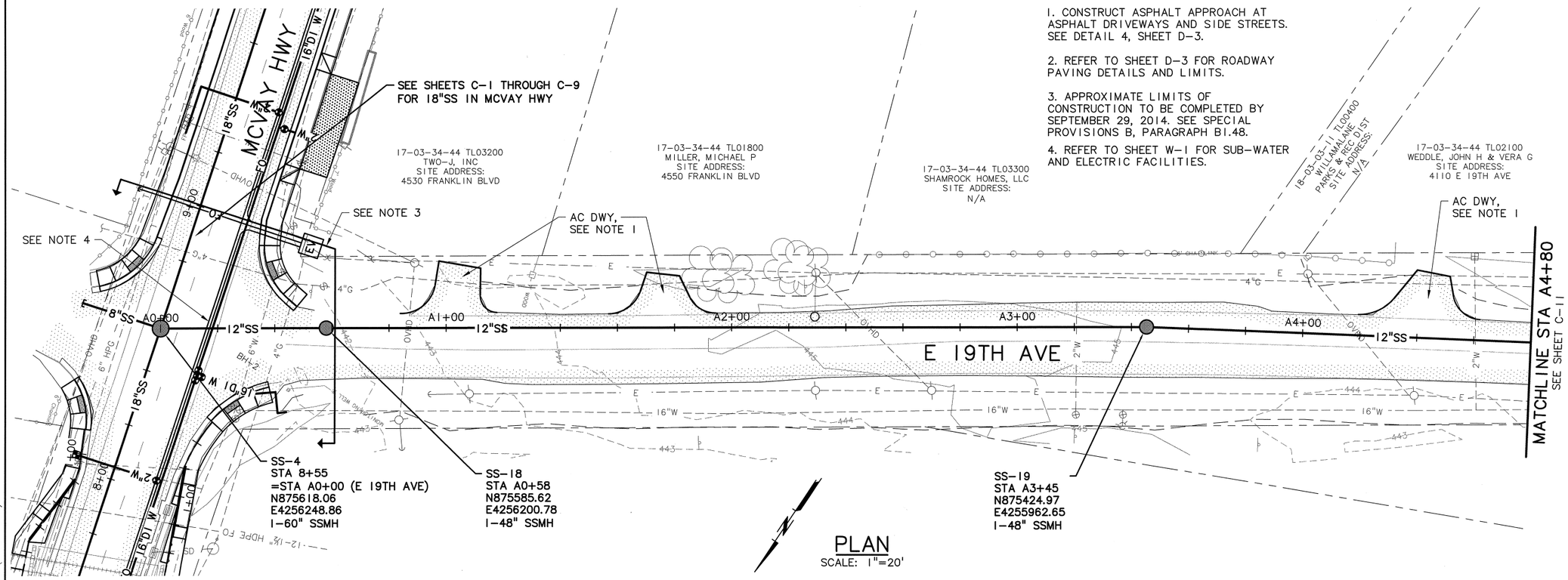

PLAN
SCALE: 1"=20'

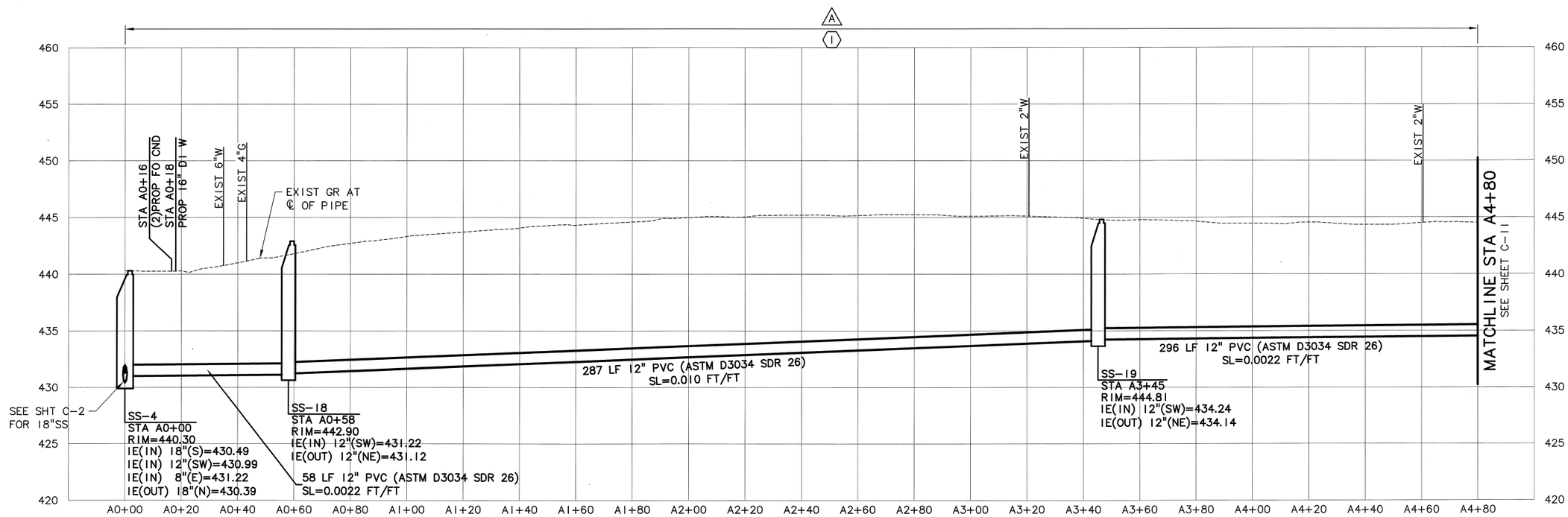

PROFILE
SCALE: 1"=20' HORIZ, 1"=5' VERT

CITY PROJECT NUMBER P21080

NO.	DATE	REVISION	BY

DESIGNED: SMG
DRAWN: DAK
CHECKED: WSE
APPROVED: WHH

C-10
19 OF 30

REGISTERED PROFESSIONAL ENGINEER 17740 OREGON JULY 31, 1984 SUSAN M. GUTTA
RENEWS 12-31-14

SCALE VERT: AS SHOWN HORIZ: AS SHOWN

NOTICE
0 1
IF THIS BAR DOES NOT MEASURE 1" THEN DRAWING IS NOT TO SCALE

PROJECT NAME: CITY OF SPRINGFIELD, OREGON
FRANKLIN/McVAY SANITARY SEWER EXTENSION
PROJECT NUMBER P21080

SHEET TITLE: PLAN AND PROFILE - STA A0+00 TO STA A4+80

MSA
Murray, Smith & Associates, Inc.
Engineers/Planners
121 S.W. Salmon, Suite 900 Portland, Oregon 97204
PHONE 503-225-9010
FAX 503-225-9022

MSA PROJECT: 13-1469.201 DATE: MAY 2014

G:\PDX_Projects\13\1469\CAD\SHEETS\13-1469-202-OR-C.dwg C-10 4/29/2014 2:32 PM DKT 18.2s (LMS Tech)

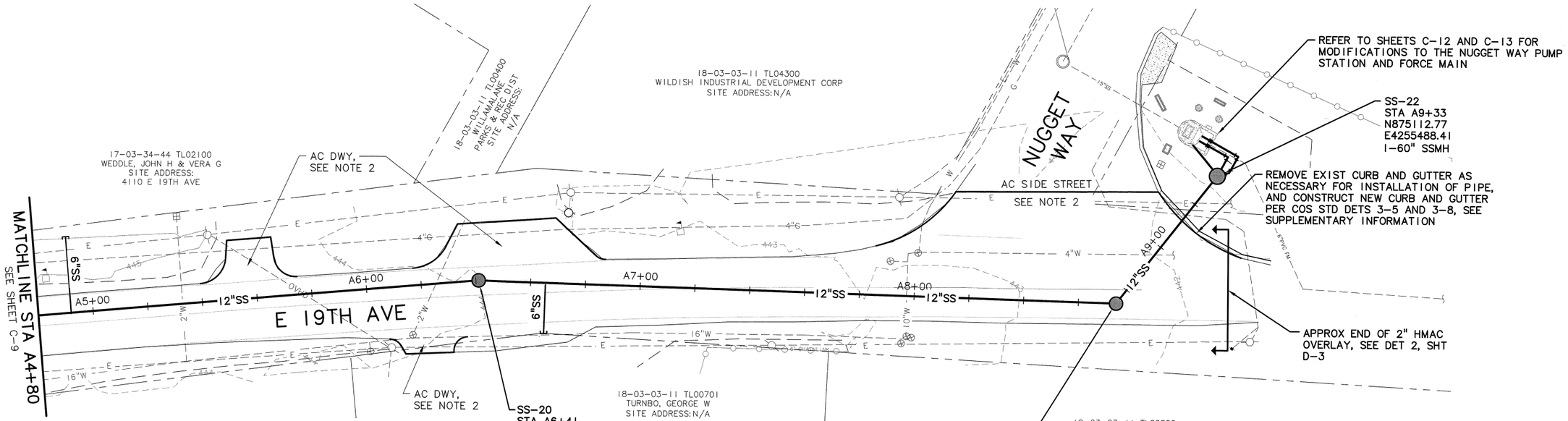

NOTES:

1. FINAL LOCATION OF SERVICE LATERALS ON E 19TH AVENUE TO BE FIELD LOCATED. COORDINATE WITH THE ENGINEER AND PROPERTY OWNERS FOR FINAL LOCATION.
2. CONSTRUCT ASPHALT APPROACH AT ASPHALT DRIVEWAYS AND SIDE STREETS. SEE DETAIL 4, SHEET D-3.
3. SERVICE LATERALS SHALL BE 6-INCH DIAMETER ASTM D3034 SDR 35 PVC PIPE. PROVIDE 5 FEET MINIMUM COVER FROM EXISTING GRADE TO INVERT OF LATERAL AT UPSTREAM END. INSTALL GASKETED END CAPS AND MARKING POSTS AT ENDS OF LATERALS. SEE SUPPLEMENTARY INFORMATION, DETAIL 4-6.
4. REFER TO SHEET D-3 FOR ROADWAY PAVING DETAILS AND LIMITS.

PLAN

SCALE: 1"=20'

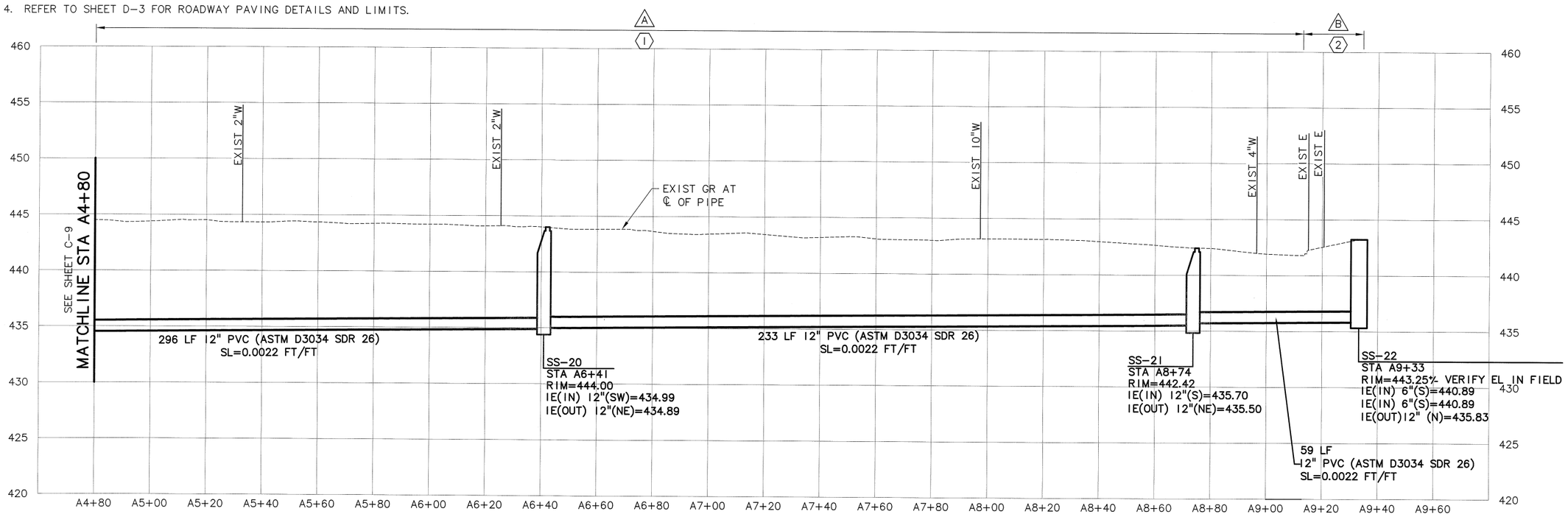

PROFILE

SCALE: 1"=20' HORIZ, 1"=5' VERT

CITY PROJECT NUMBER P21080

NO.	DATE	REVISION	BY

DESIGNED: SMG
DRAWN: DAK
CHECKED: WSE
APPROVED: WHH

REGISTERED PROFESSIONAL ENGINEER
OREGON
SUSAN M. GREEN
RENEWS 12-31-14

SCALE VERT: AS SHOWN
HORIZ: AS SHOWN

NOTICE
0 1
IF THIS BAR DOES NOT MEASURE 1" THE DRAWING IS NOT TO SCALE

PROJECT NAME: CITY OF SPRINGFIELD, OREGON
FRANKLIN/McVAY SANITARY SEWER EXTENSION
PROJECT NUMBER P21080

SHEET TITLE: PLAN AND PROFILE - STA A4+80 TO STA A9+33

MSA
Murray, Smith & Associates, Inc.
Engineers/Planners
121 S.W. Salmon, Suite 900 Portland, Oregon 97204
PHONE 503-225-9010
FAX 503-225-9022

MSA PROJECT: 13-1469.201
DATE: MAY 2014

G:\PDX_Projects\13\1469\CAD\SHEETS\13-1469-202-OR-C.dwg C-11 5/9/2014 9:30 AM JDN 18.2s (LMS Tech)

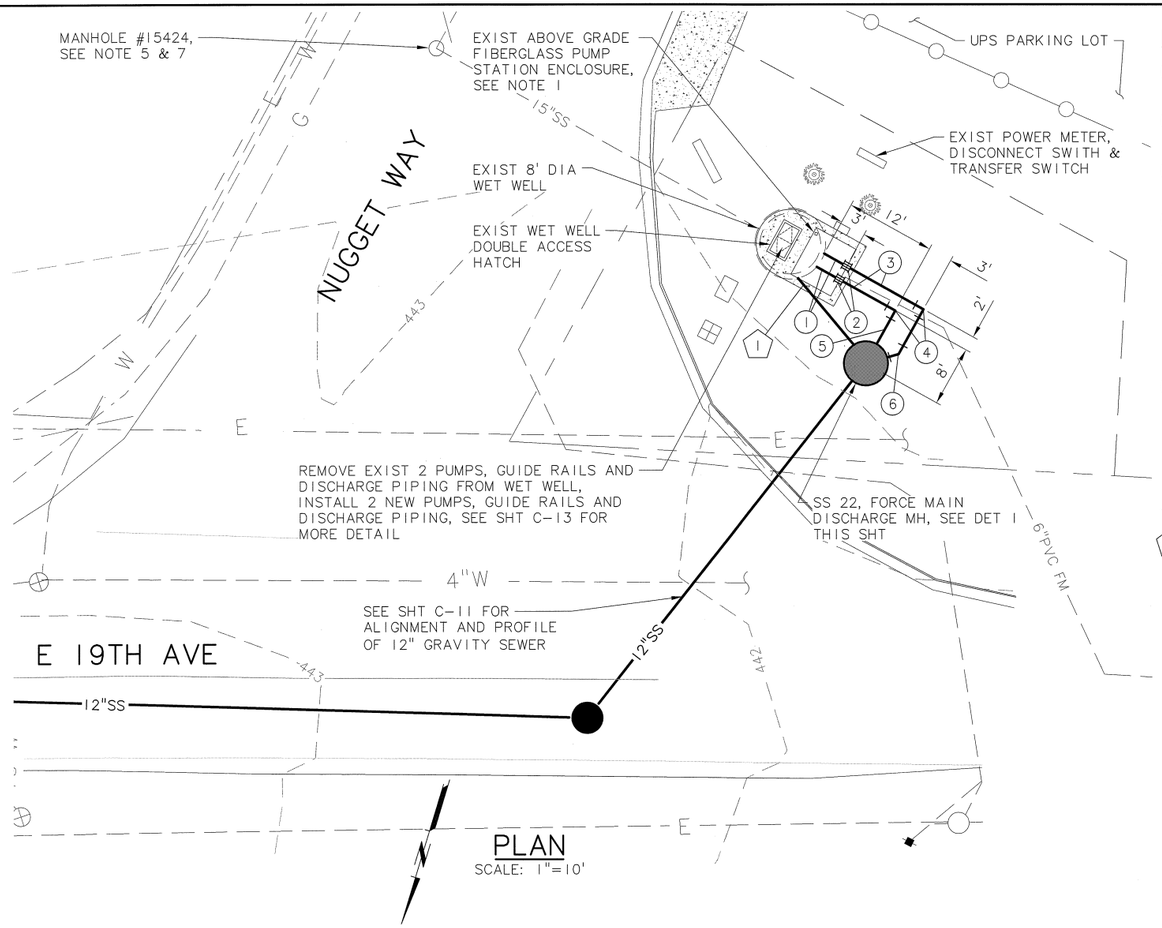

PLAN

SCALE: 1"=10'

FORCE MAIN SCHEDULE

1. FURNISH AND INSTALL: 6" DI SPL, PExFLG, LENGTH AS REQ'D
2. FURNISH AND INSTALL: 6" DI LS, MJ
3. FURNISH AND INSTALL: 6" DI SPL, PE, LENGTH AS REQ'D
4. FURNISH AND INSTALL: 6" DI 90° BEND, MJ
5. FURNISH AND INSTALL: 1-6" DI SPL, PE X BELL, LENGTH AS REQ'D
   1-6" DI SPL, PE, LENGTH AS REQ'D PROVIDE PIPE JOINT WITHIN 2 FEET OF CONNECTION TO DISCHARGE MH
6. FURNISH & INSTALL: 2-6" DI SPL, PE, LENGTH AS REQ'D
   1-6" DI 45° BEND, MJ
   CONNECT TO DISCHARGE MH

12" RELIEF SEWER SCHEDULE

1. 13 LF OF 12" PVC SS, INSTALL AT IE=440.26 AT WET WELL AND SLOPE AT 2% SLOPE TO MANHOLE. TUNNEL UNDER CONCRETE AS NEEDED AND PROTECT EXISTING STRUCTURE DURING INSTALLATION.

DESIGN DATA SUMMARY TABLE

PUMP STATION	
LOCATION	SOUTHWEST CORNER OF NUGGET WAY AND 19TH AVENUE, SPRINGFIELD OREGON
TYPE	DUPLEX SUBMERSIBLE PUMP STATION
CAPACITY (PER PUMP)	600 GPM AT 18 FEET TDH
MOTOR HORSEPOWER, HP	5 HP
PUMP STARTS AT INFLOW = 50% OF THE PUMP CAPACITY	4 PER PUMP PER HOUR (DUPLEX OPERATION) 8 PER PUMP PER HOUR (ONE PUMP OUT OF SERVICE)
WET WELL VOLUME	1,127 GALLONS (PUMPS OFF TO LEAD PUMP ON)
LEVEL CONTROL TYPE	FREE HANGING, EXTERNALLY WEIGHTED MERCURY LEVEL SENSORS WITH ELECTRICAL INTERLOCKS
ALARM TELEMETRY TYPE	MOTOROLA INTRAC 2000 RADIO TELEMETRY SYSTEM
STANDBY POWER TYPE	PORTABLE GENERATOR
FUEL TANK CAPACITY	N/A
OVERFLOW POINT	MANHOLE #15424 LOCATED AT INTERSECTION OF 19TH AVENUE AND NUGGET WAY
OVERFLOW ELEVATION	443.17
100-YEAR & 500-YEAR FLOOD ELEVATIONS	NOT APPLICABLE – ABOVE FEMA FLOOD ELEVATIONS
EPA RELIABILITY CLASS	1
FORCE MAIN	
TYPE AND LENGTH	2-6" DUCTILE IRON FORCE MAIN, 20-25 LF
PROFILE DESCRIPTION	CONTINUOUSLY ASCENDING
AIR RELEASE VALVES	NONE
AVERAGE FORCE MAIN DETENTION TIME	N/A (AUTO DRAIN-BACK)
DISCHARGE MANHOLE LOCATION	SS 22
SULFIDE CONTROL SYSTEM	NONE.

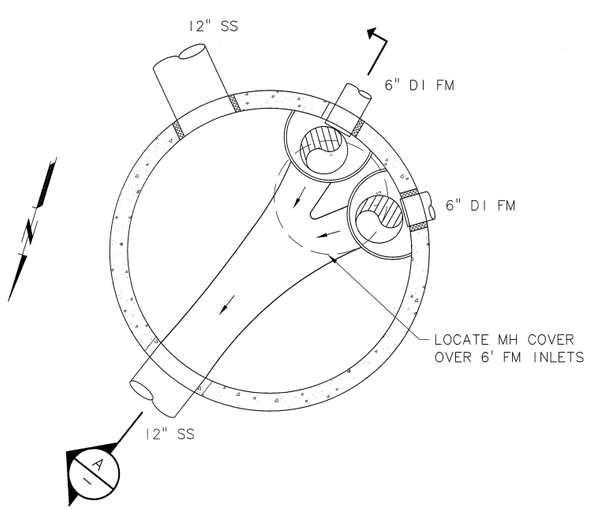

FORCE MAIN DISCHARGE MANHOLE – PLAN (1)

SCALE: 3/4"=1'-0"

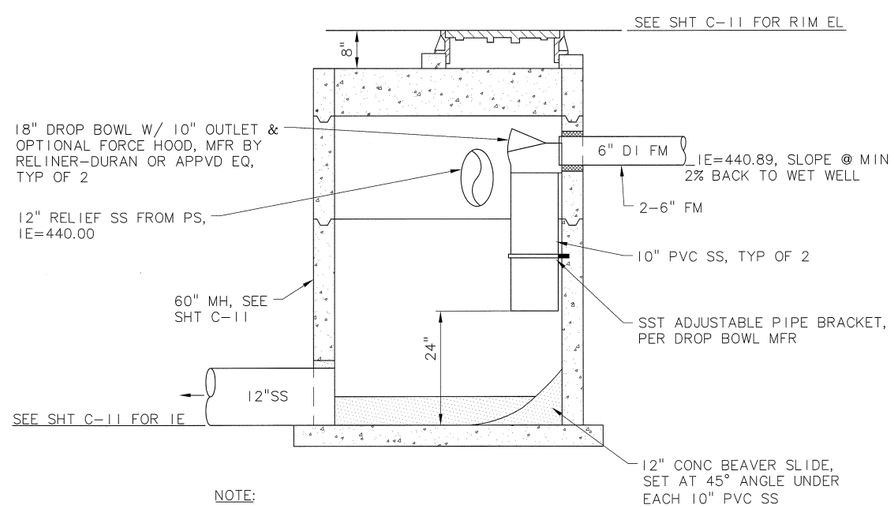

NOTE:

1. PIPE AND FITTING FOR DROP BOWL ASSEMBLY SHALL BE: PVC ASTM D3034 SDR 35.

FORCE MAIN DISCHARGE MANHOLE – SECTION (A)

SCALE: 3/4"=1'-0"

NOTES:

1. EXISTING PUMP STATION ENCLOSURE INCLUDES PUMP DISCHARGE PIPING AND FITTINGS, CHECK VALVES, PLUG VALVES, PRESSURE GAUGES AND ASSOCIATED APPURTENANCES. THE ENCLOSURE ALSO INCLUDES THE MOTOR CONTROL PANEL AND THE JUNCTION BOX FOR PUMP CABLES AND FLOAT SWITCH JUNCTION BOX. SEE DET 1 SHT C-13 FOR MODIFICATIONS TO EXISTING EQUIPMENT.

2. FORCE MAIN PIPING AND FITTINGS SHALL BE DUCTILE IRON, CLASS 52, WITH RESTRAINED JOINT, UNLESS OTHERWISE NOTED.

3. CONTRACTOR SHALL POTHOLE ALL EXISTING UTILITIES PRIOR TO CONSTRUCTION TO VERIFY SIZES AND LOCATIONS. ALL DISCREPANCIES SHALL BE REPORTED TO ENGINEER.

4. FOLLOWING INSTALLATION OF PROPOSED FORCE MAIN AND APPROVED TESTING OF NEW 5 HP PUMPS, ABANDON EXISTING FORCE MAIN IN PLACE FROM PUMP STATION TO DISCHARGE MANHOLE #5169 LOCATED APPROXIMATELY 60 FEET NORTH OF INTERSECTION OF GLENWOOD ROAD AND 17TH AVENUE. PLUG ENDS WITH BLIND FLANGE AT WET WELL AND MECHANICAL PLUG OR GROUT AT MANHOLE #5169.

5. PROVIDE BYPASS PUMPING FROM UPSTREAM MANHOLE #15424 TO PROPOSED SEWER SYSTEM DOWNSTREAM OF DISCHARGE MANHOLE. SEE SPECIAL PROVISIONS FOR REQUIREMENTS OF BYPASS PUMPING.

6. MODIFICATIONS TO NUGGET WAY PUMP STATION SHALL BE SEQUENCED AND COORDINATED WITH INSTALLATION OF GRAVITY SEWER ON 19TH AVENUE.

7. CONTRACTOR SHALL CONFIRM ELEVATIONS AT PUMP STATION. APPROXIMATE ELEVATIONS SHOWN ARE BASED ON A 3.89 FEET DIFFERENTIAL BETWEEN THE RIM ELEVATION OF 443.17' AT MANHOLE #15424 THAT WAS SURVEYED FOR THIS PROJECT AND THE ELEVATION OF 439.28' AS SHOWN ON THE WILDISH WASTEWATER SYSTEM AS-BUILT DATED 1/11/2000.

CITY PROJECT NUMBER P21080

NO.	DATE	REVISION	BY

DESIGNED: EPK
DRAWN: RLF
CHECKED: WSE
APPROVED: WHH

C-12
21 OF 30

REGISTERED PROFESSIONAL ENGINEER — OREGON — JULY 21, 1989 — MICHAEL L. WAHL — RENEWS 12-31-15

SCALE: VERT.: AS SHOWN; HORIZ.: AS SHOWN

NOTICE: IF THIS BAR DOES NOT MEASURE 1" THEN DRAWING IS NOT TO SCALE

PROJECT NAME: CITY OF SPRINGFIELD, OREGON
FRANKLIN/McVAY SANITARY SEWER EXTENSION
PROJECT NUMBER P21080

SHEET TITLE: NUGGET WAY PUMP STATION
SITE PLAN & DETAILS

Murray, Smith & Associates, Inc.
Engineers/Planners
121 S.W. Salmon, Suite 900 Portland, Oregon 97204
PHONE 503-225-9010
FAX 503-225-9022

MSA PROJECT: 13-1469.201 DATE: MAY 2014

G:\PDX_Projects\13\1469\CAD\SHEETS\13-1469-202-OR-C-12_C-13.dwg C-12 4/29/2014 2:43 PM DKT 18.2s (LMS Tech)

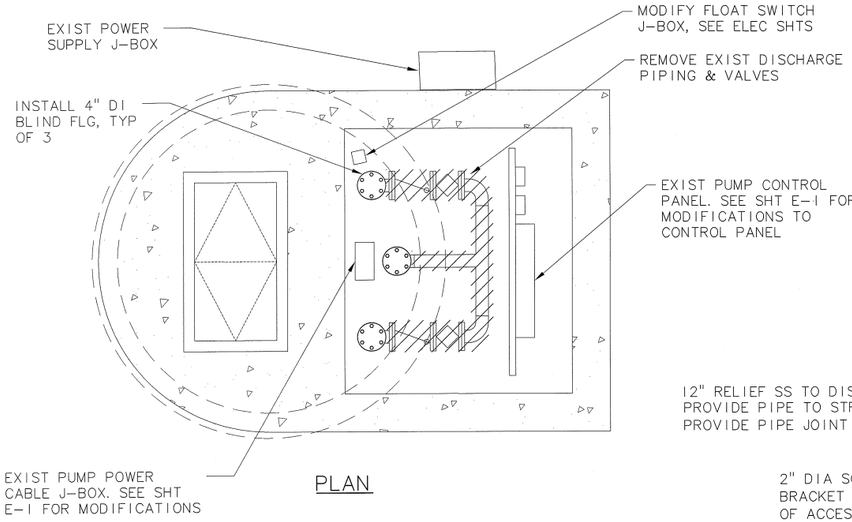

PLAN

PUMP STATION ENCLOSURE DETAIL (1/–)

SCALE: ½"=1'-0"

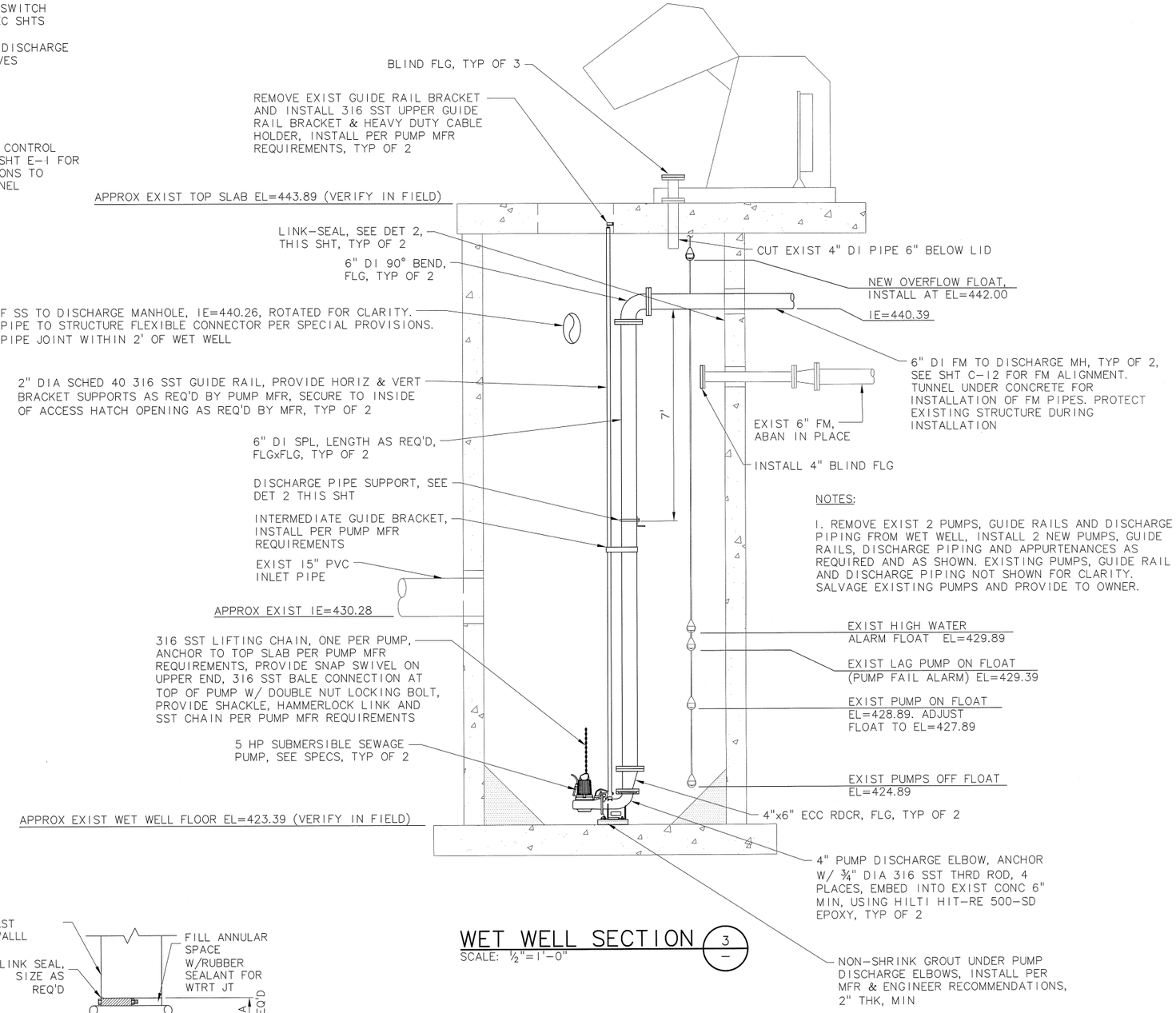

NOTES:

1. REMOVE EXIST 2 PUMPS, GUIDE RAILS AND DISCHARGE PIPING FROM WET WELL, INSTALL 2 NEW PUMPS, GUIDE RAILS, DISCHARGE PIPING AND APPURTENANCES AS REQUIRED AND AS SHOWN. EXISTING PUMPS, GUIDE RAIL AND DISCHARGE PIPING NOT SHOWN FOR CLARITY. SALVAGE EXISTING PUMPS AND PROVIDE TO OWNER.

WET WELL SECTION (3/–)

SCALE: ½"=1'-0"

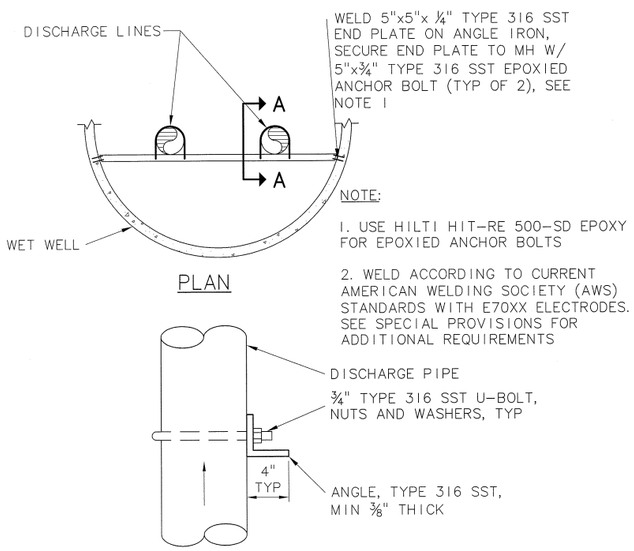

NOTE:

1. USE HILTI HIT-RE 500-SD EPOXY FOR EPOXIED ANCHOR BOLTS

2. WELD ACCORDING TO CURRENT AMERICAN WELDING SOCIETY (AWS) STANDARDS WITH E70XX ELECTRODES. SEE SPECIAL PROVISIONS FOR ADDITIONAL REQUIREMENTS

PLAN

SECTION A-A

DISCHARGE PIPE SUPPORT (2/–)

SCALE: NTS

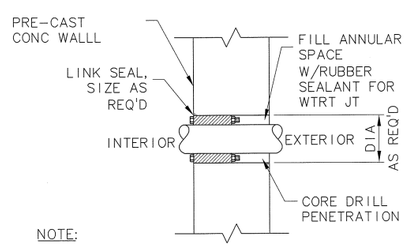

NOTE:

1. SEAL ALL WALL PIPE PENETRATIONS WITH LINK SEAL TYPE SEAL UNLESS OTHERWISE NOTED. FOR PIPE SIZES TOO SMALL FOR LINK SEALS, SEAL W/EPOXY SEALANT.

WALL PENETRATION (3/–)

SCALE: NTS

CITY PROJECT NUMBER P21080

NO.	DATE	REVISION	BY

DESIGNED: EPK
DRAWN: DAK
CHECKED: WSE
APPROVED: WHH

C-13
22 OF 30

REGISTERED PROFESSIONAL ENGINEER — OREGON — JULY 21, 1989 — 9837 — MICHAEL L. CHIPP — RENEWS 12-31-15

SCALE — VERT: AS SHOWN — HORIZ: AS SHOWN

NOTICE: IF THIS BAR DOES NOT MEASURE 1" THE DRAWING IS NOT TO SCALE (0 — 1)

PROJECT NAME: CITY OF SPRINGFIELD, OREGON — FRANKLIN/McVAY SANITARY SEWER EXTENSION — PROJECT NUMBER P21080

SHEET TITLE: NUGGET WAY PUMP STATION — GENERAL DETAILS

MSA — Murray, Smith & Associates, Inc. Engineers/Planners — 121 S.W. Salmon, Suite 900, Portland, Oregon 97204 — PHONE 503-225-9010 — FAX 503-225-9022

MSA PROJECT: 13-1469.201 — DATE: MAY 2014

G:\PDX_Projects\13\1469\CAD\SHEETS\13-1469-202-OR-C-12_C-13.dwg C-13 4/29/2014 2:43 PM DKT 18.2s (LMS Tech)

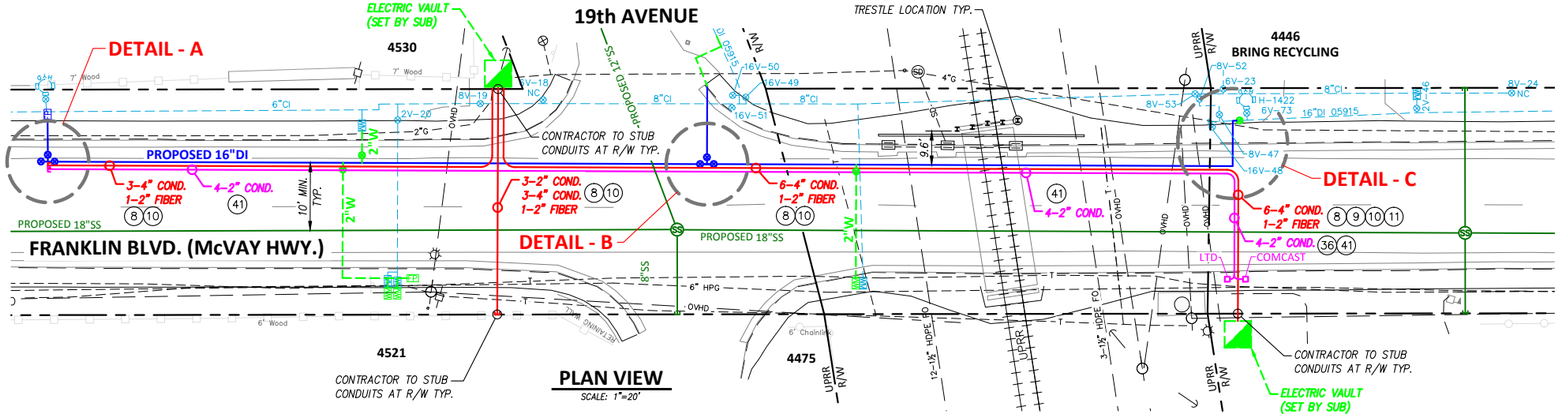

PLAN VIEW

SCALE: 1"=20'

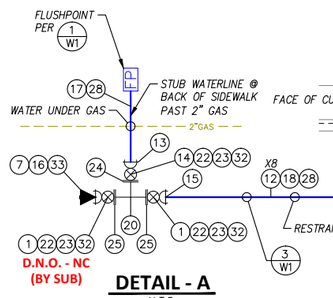

DETAIL - A

N.T.S.

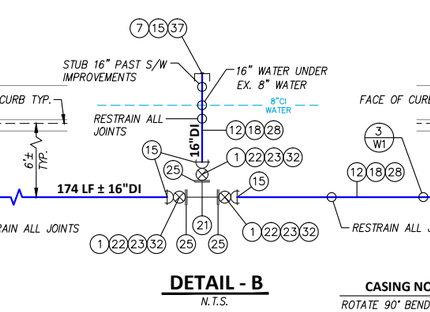

DETAIL - B

N.T.S.

CASING NOTE:

ROTATE 90° BEND AS NEEDED TO ACHIEVE GRADE

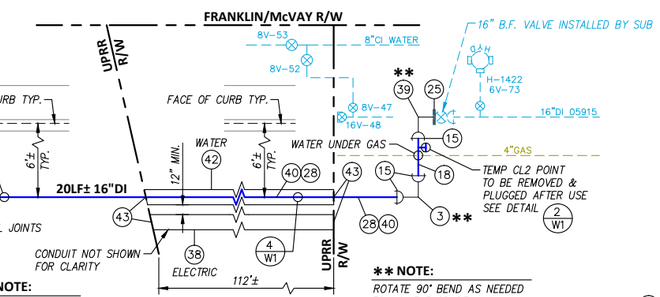

**** NOTE:**

ROTATE 90° BEND AS NEEDED TO ACHIEVE GRADE

DETAIL - C

N.T.S.

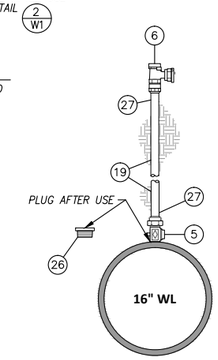

TEMP CL2 POINT

N.T.S.

GENERAL NOTES

1. ALL STUBBED CONDUITS SHALL BE SEALED WITH A CAP. CONDUITS STUBBED TO THE RIGHT-OF-WAY SHALL BE MARKED IN ACCORDANCE WITH STANDARD DRAWING W1.27.
2. SUB ELECTRIC WILL SET ALL ELECTRIC VAULTS.
3. ALL CONDUIT INSTALLED OUTSIDE OF THE JOINT TRENCH WITH THE WATER LINE SHALL CONFORM TO STANDARD DRAWING ESD0074.
4. REFER TO DETAILED ELECTRICAL CONDUIT PLAN (THIS SHEET) FOR COMPLETE SUB ELECTRIC CONDUIT INSTALLATION AND REQUIREMENTS.
5. WATER CASING INSTALLATION SHALL CONFORM TO STD. DWG. W1.30.
6. CATHODIC PROTECTION FOR CASINGS SHALL CONFORM TO STD. DWG. W1.31M.

TRENCH SECTION NOTE

A. BACKFILL REQUIREMENTS AND SURFACE RESTORATION ABOVE THE PIPE ZONE SHALL BE AS REQUIRED IN DETAIL 1 SHEET D-1.

LEGEND

- CONTRACTOR CONSTRUCTED WATER FACILITIES
- SUB CREW CONSTRUCTED FACILITIES
- SUB ELECTRIC CONDUITS NUMBER AND SIZE AS NOTED
- UTILITY CONDUITS NUMBER AND SIZE AS NOTED
- PROPOSED SEWER REFER TO CITY PLANS.
- ELECTRIC VAULT TO BE INSTALLED BY SUB CONSTRUCTION CREW
- WATER VALVE
- 90° BEND
- TEE
- CAP & BRASS PLUG
- MJ PLUG
- FP FLUSH POINT LOCATION
- MECHANICAL JOINT CONNECTION
- FLANGED JOINT CONNECTION

SPRINGFIELD UTILITY BOARD PROJECT CONTACTS

WATER DIVISION: LADD BOYCE, 541-501-0749
ELECTRIC DIVISON: TONY TALBOT, 541-912-3878

CONTRACTOR MATERIAL LIST

No.	QUANTITY	PART
1	5	16" BUTTERFLY VALVE - MJ x FL
2	1	6" 90° BEND - MJ
3	1	16" - 90° BEND - MJ
4	1	2" METER BOX
5	1	1" CORP. STOP
6	1	1" ANGLE METER VALVE
7	2	2" BRASS PLUG
8	640 LF	2" CONDUIT - SCH. 40 (GRAY)
9	7	2" CONDUIT SWEEP (36") - SCH. 40 (GRAY)
10	2,160 LF	4" CONDUIT - SCH. 40 (GRAY)
11	9	4" CONDUIT SWEEP (36") - SCH. 40 (GRAY)
12	10	16" FIELDLOK GASKET
13	3	6" GRIP RING
14	1	6" GATE VALVE - MJ x FL
15	8	16" THRUST RESTRAINT
16	1	16" X 2" PLUG - MJ
17	18 LF	6" DUCTILE IRON PIPE
18	342 LF	16" DUCTILE IRON PIPE
19	10 LF	1" POLY PIPE
20	1	16" X 6" TEE - FL
21	1	16" X 16" TEE - FL
22	6	8" VALVE TILE LID
23	6	8" VALVE TILE INSERT
24	2	6" FL KIT

CONTRACTOR MATERIAL LIST

No.	QUANTITY	PART
25	6	16" FL KIT
26	1	1" "CC" BRASS PLUG
27	2	1" PLASTIC STIFFENER INSERTS
28	700 LF	TRACER WIRE
29	1	6" x 5' SPOOL PIECE - FL x PE
30	1	5" STORZ x 6" FL ADAPTER
31	1	5" STORZ CAP
32	30 LF	8" VALVE TILE
33	1	16" MJ KIT
34	7	2" BELL ENDS
35	18	4" BELL END
36	4	2" CONDUIT SWEEP (36") - SCH. 40 (OFF WHITE)
37	1	16" X 2" CAP - MJ
38	112 LF	24" STEEL CASING
39	1	16" - 90° BEND - MJ x FL
40	126 LF	16" RESTRAINED JOINT DUCTILE IRON PIPE
41	1,400 LF	2" CONDUIT - SCH. 40 (OFF WHITE)
42	112 LF	30" STEEL CASING
43	4	32LB HIGH POTENTIAL MAGNESIUM ANODE

NOTE:

CONTRACTOR MATERIAL LIST IS PROVIDED FOR CONVENIENCE. PAYMENT FOR WORK COMPLETED WILL BE AS SHOWN IN IN SPECIALS SECTION C, MEASUREMENT AND PAYMENT.

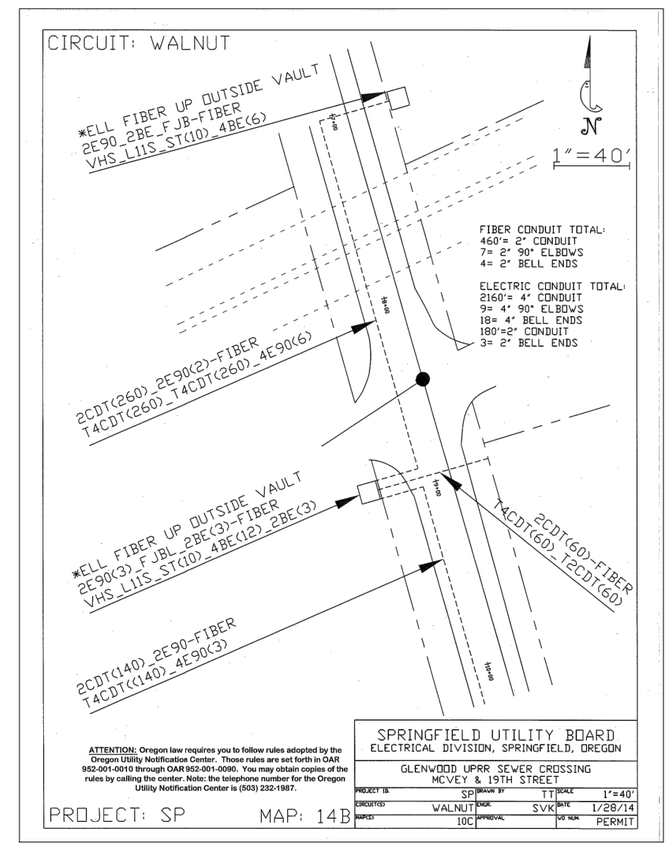

ELECTRICAL CONDUIT PLAN

SCALE: 1"=40'

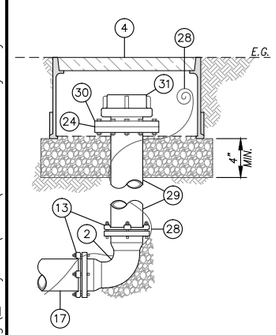

DETAIL - 1
6" FLUSHPOINT

N.T.S.

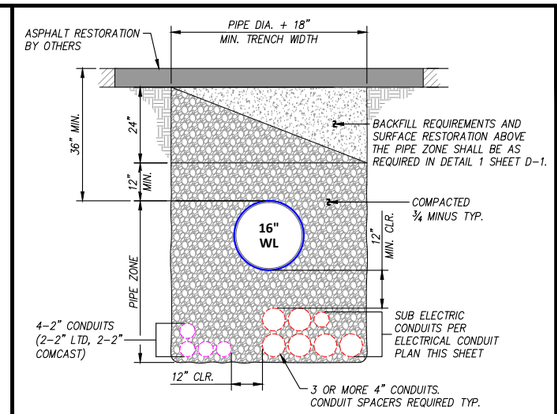

TYPICAL JOINT TRENCH SECTION

OUTSIDE UPRR R/W
N.T.S.

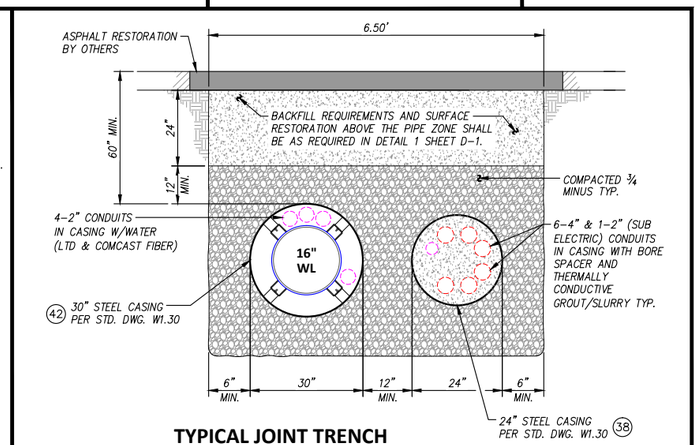

TYPICAL JOINT TRENCH SECTION

WITHIN UPRR R/W
LOOKING NORTH - N.T.S.

CITY PROJECT NUMBER P21080

NO.	DATE	REVISION	BY

DESIGNED: LSB
DRAWN: LSB
CHECKED: BEM
APPROVED:

W-1
23 OF 30

REGISTERED PROFESSIONAL ENGINEER — OREGON — BART E. McKEE — EXPIRES DECEMBER 31, 2014

SCALE — VERT: AS SHOWN — HORIZ: AS SHOWN
NOTICE — 0 1 — IF THIS BAR DOES NOT MEASURE 1" THEN DRAWING IS NOT TO SCALE

PROJECT NAME: CITY OF SPRINGFIELD, OREGON
FRANKLIN/McVAY SANITARY SEWER EXTENSION
PROJECT NUMBER P21080

SHEET TITLE: FRANKLIN BLVD. (McVAY HWY.)
UPRR TRESTLE CROSSING CONTRACTOR CONSTRUCTED WATER AND ELECTRIC FACILITEIS

SPRINGFIELD UTILITY BOARD
WATER ENGINEERING DIVISION
SPRINGFIELD , OREGON

MSA PROJECT: 13-1469.201 — DATE: APRIL 2014

S:\Engineering_Projects\2013\13947 - McVoy Hwy. Transmission\13947 - UPRR Crossing.dwg 24x36 - Contractor work 4/23/2014 3:55 PM LADDB 19.0s (LMS Tech)

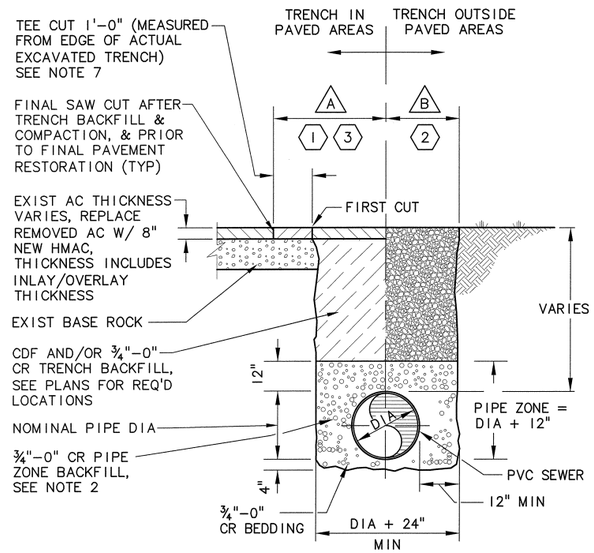

SYMBOL **BACKFILL REQUIREMENTS**

1. FURNISH & INSTALL ¾"-0" TRENCH BACKFILL TO PAVEMENT BASE OR EXISTING GRADE IN GRAVELED AREAS.
2. FURNISH & INSTALL ¾"-0" TRENCH BACKFILL TO GRADE.
3. FURNISH & INSTALL ¾"-0" TRENCH BACKFILL FROM PIPE ZONE TO 24" BELOW PAVEMENT BASE. FURNISH & INSTALL CONTROLLED DENSITY FILL (CDF) TRENCH BACKFILL FROM 24" BELOW PAVEMENT BASE TO PAVEMENT BASE. CDF TO BE COMPRESSIVE TESTED IN ACCORDANCE WITH ASTM D4832.

SYMBOL **SURFACE RESTORATION REQUIREMENTS**

A. REPLACE REMOVED ASPHALT W/ 8" THICK LEVEL 3, ½" DENSE HMAC. PLACE IN 3" THICK MAXIMUM LIFTS. 8" HMAC THICKNESS INCLUDES 2" INLAY/OVERLAY THICKNESS. SEE DETAILS, SHEET D-3.

B. FOR NON AC SURFACES BRING ¾"-0" BACKFILL TO GRADE. FINISH TRENCH SURFACE TO MATCH ORIGINAL CONTOURS. REPLACE EXIST LANDSCAPING.

TYPICAL TRENCH & SURFACING DETAIL (1/–)

SCALE: NTS

NOTES:

1. FOR TRENCHES OUTSIDE PAVED OR GRAVEL AREAS REMOVE AND STOCKPILE THE TOP 12 INCHES OF TOPSOIL FOR REUSE AS SURFACE RESTORATION.

2. USE ¾"-0" PIPE ZONE BACKFILL & BEDDING EXCEPT WHERE CONTROLLED DENSITY FILL (CDF) IS REQUIRED.

3. COMPACT ALL ¾"-0" BACKFILL IN LIFTS TO ACHIEVE 95% OF MAXIMUM TRENCH DENSITY IN ACCORDANCE WITH AASHTO T-180.

4. REFER TO STANDARD SPECIFICATIONS FOR BACKFILL/BEDDING REQUIREMENTS.

5. THE TRENCH WIDTH MAY VARY DEPENDING ON THE CONTRACTOR'S SHORING METHODS DUE TO SLOUGHING OR UNRAVELING OF THE NATIVE SOILS (REFER TO GEOTECHNICAL REPORT IN SUPPLEMENTARY INFORMATION). BACKFILL AND SURFACE RESTORATION SHALL EXTEND THE FULL TRENCH WIDTH TO NATIVE SOIL REGARDLESS OF SHORING METHOD USED.

6. WHERE EXCAVATING NEAR EXISTING UTILITIES, THE EXISTING TRENCH BACKFILL MATERIAL MAY SLOUGH OUT OF THE EXISTING UTILITY TRENCH. REPLACE ALL LOST BACKFILL FROM EXISTING TRENCHES PER THIS DETAIL. NO ADDITIONAL PAYMENT WILL BE MADE FOR REPLACING LOST BACKFILL IN ADJACENT TRENCHES.

7. WHERE TRENCH EXTENDS THROUGH CURB, GUTTER OR SIDEWALK, CONSTRUCT NEW CURB, GUTTER OR SIDEWALK PER CITY OF SPRINGFIELD STANDARD DETAILS AND SPECIFICATIONS, SEE SUPPLEMENTARY INFORMATION.

8. AT THE END OF EACH WORK DAY ALL OPEN TRENCHES SHALL BE BACKFILLED OR ADEQUATELY COVERED OR PROTECTED TO ACCOMMODATE TRAFFIC AND PEDESTRIANS OR TO PREVENT TRAFFIC AND PEDESTRIANS FROM ENTERING THE IMMEDIATE WORK ZONE. ALL TRENCHES LONGER THAN 500 FEET SHALL BE TEMPORARILY PAVED WITH BASE COURSE. ALL TRENCHES REGARDLESS OF LENGTH SHALL BE TEMPORARILY PAVED NO LESS THAN WEEKLY WITH BASE COURSE.

9. FURNISH & INSTALL TRACER WIRE ABOVE ALL PIPELINES IN ACCORDANCE WITH THE OREGON DEPARTMENT OF TRANSPORTATION STANDARD SPECIFICATIONS FOR CONSTRUCTION, SECTION 00445

10. AFTER THE FINAL SAW CUT IS MADE FOR THE TRENCH "TEE CUT", IN AREAS WHERE THE REMAINING STRIP OF EXISTING ASPHALT IS LESS THAN THREE FEET IN WIDTH BETWEEN THE CUT AND THE EDGE OF AC PAVEMENT, THE REMAINING STRIP OF EXISTING ASPHALT SHALL BE REMOVED AND REPLACED AS FOLLOWS:

    A. REMOVE FULL DEPTH OF ASPHALT AND BASE TO 20" BELOW FINAL GRADE. PLACE 12-INCH THICK COMPACTED ¾"-0" CRUSHED ROCK TO 8 INCHES BELOW FINAL GRADE, THEN PLACE 8-INCH THICK LEVEL 3, ½" DENSE, HMAC (6-INCH THICK BASE COURSE AND 2-INCH THICK INLAY/OVERLAY). PLACE ASPHALT IN 3-INCH MAXIMUM LIFTS. NO SEPARATE PAYMENT WILL BE MADE FOR THE ADDITIONAL BASE ROCK.

11. INSTALL CDF BACKFILL WHERE DIRECTED BY THE ENGINEER.

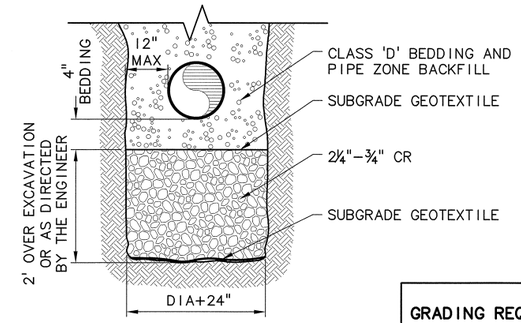

SECTION

GRADING REQUIREMENTS	
SIEVE SIZE	2¼"-¾"
1.50"	25% TO 60%
0.50"	0% TO 5%
0.25"	0% TO 2%
#200	0% TO 1%

NOTES:

1. WHERE DIRECTED BY THE ENGINEER, OVEREXCAVATE THE TRENCH BOTTOM TWO (2) FEET DEEP (OR AS DIRECTED BY THE ENGINEER) AND INSTALL SUBGRADE GEOTEXTILE AND 2¼"-¾" CRUSHED ROCK.

2. 2¼"-¾" CRUSHED ROCK FOR SUBGRADE STABILIZATION SHALL MEET THE GRADING REQUIREMENTS SHOWN IN THE TABLE ABOVE AND ALL OTHER REQUIREMENTS FOR BASE AGGREGATES. SEE SPECIFICATIONS.

3. SUBGRADE GEOTEXTILE SHALL BE A WOVEN GEOTEXTILE MEETING THE REQUIREMENTS OF AN AASHTO M288-05 CLASS 2 GEOTEXTILE. MIRAFI 600X, OR APPROVED EQUAL.

4. PLACE SUBGRADE STABILIZATION ROCK IN HORIZONTAL LAYERS WITH LOOSE THICKNESS NOT EXCEEDING 12 INCHES AND COMPACT EACH LAYER WITH A MINIMUM OF THREE PASSES USING MACHINE OR HAND OPERATED PNEUMATIC OR MECHANICAL TAMPERS.

TRENCH SUBGRADE STABILIZATION (2/–)

SCALE: NTS

CITY PROJECT NUMBER P21080

NO.	DATE	REVISION	BY

DESIGNED: SMG
DRAWN: DAK
CHECKED: WSE
APPROVED: WHH

REGISTERED PROFESSIONAL ENGINEER 17140 OREGON JULY 14, 1989 SUSAN M. GREER
RENEWS 12-31-14

SCALE VERT: AS SHOWN HORIZ: AS SHOWN
NOTICE 0 1 IF THIS BAR DOES NOT MEASURE 1" THEN DRAWING IS NOT TO SCALE

PROJECT NAME: CITY OF SPRINGFIELD, OREGON
FRANKLIN/McVAY SANITARY SEWER EXTENSION
PROJECT NUMBER P21080

SHEET TITLE: MISCELLANEOUS SEWER DETAILS

Murray, Smith & Associates, Inc.
Engineers/Planners
121 S.W. Salmon, Suite 900 Portland, Oregon 97204
PHONE 503-225-9010 FAX 503-225-9022

MSA PROJECT: 13-1469.201 DATE: MAY 2014

D-1
24 OF 30

G:\PDX_Projects\13\1469\CAD\SHEETS\13-1469-202-OR-D.dwg D-1 4/28/2014 4:07 PM DKT 18.2s (LMS Tech)

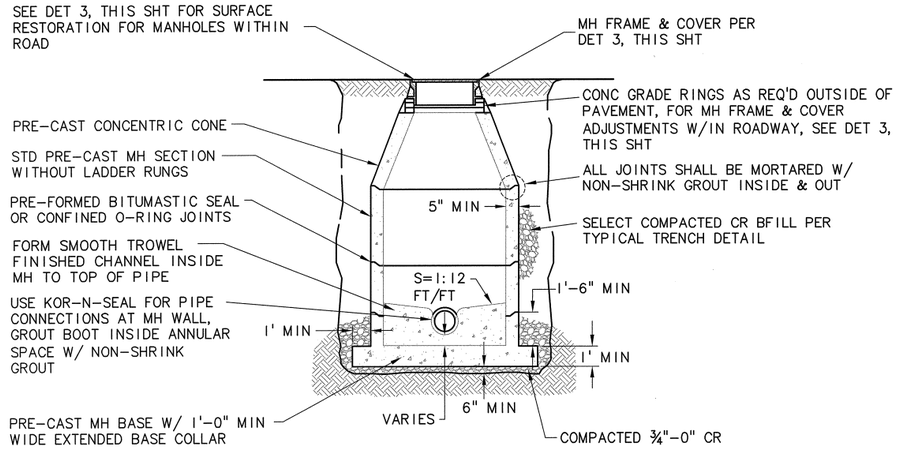

NOTES:

1. IF MANHOLE IS LESS THAN 8' DEEP, USE FLAT TOP MANHOLE INSTEAD OF CONE.
2. CHANNELS TO BE FORMED TO FACILITATE FLOW PER CITY OF SPRINGFIELD STANDARD DETAIL #4-2.
3. OPENINGS FOR PIPE SHALL BE PREFORMED OR CORED BY THE MANUFACTURER.
4. ALL CONNECTING PIPE SHALL HAVE A FLEXIBLE JOINT WITHIN 18" OF OUTSIDE WALL OF MANHOLE.

STANDARD 48" PRECAST MANHOLE (1/-)

SCALE: NTS

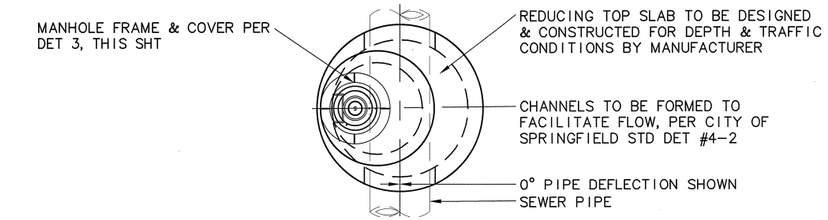

PLAN

MINIMUM WALL THICKNESS	
MH DIA	THICKNESS
48"	5"
60"	6"
72"	7"

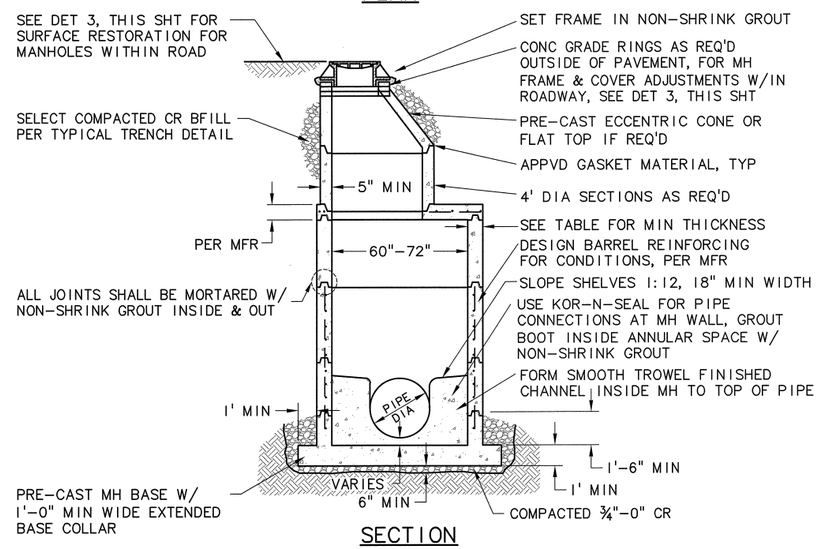

SECTION

NOTES:

1. ROTATE TOP SECTION OF THE MANHOLE TO LOCATE FRAME AND COVER OUTSIDE OF THE WHEEL PATH OF THE TRAVEL LANE, UNLESS OTHERWISE APPROVED BY THE ENGINEER.
2. OPENINGS FOR PIPE SHALL BE PREFORMED OR CORED BY THE MANUFACTURER.
3. IF MANHOLE IS LESS THAN 8' DEEP, USE FLAT TOP MANHOLE INSTEAD OF A CONE.
4. ALL CONNECTING PIPE SHALL HAVE A FLEXIBLE JOINT WITHIN 18" OF OUTSIDE WALL OF MANHOLE.

STANDARD 60"-72" PRECAST MANHOLE (2/-)

SCALE: NTS

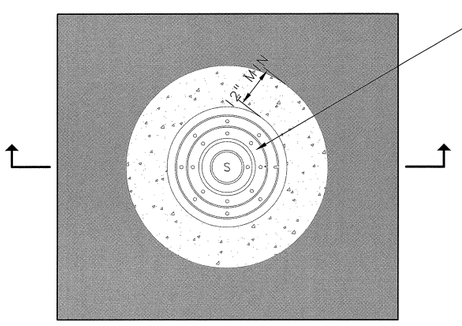

PLAN

FRAME & COVER:
INLAND FOUNDRY CO. OR EQUAL
FRAME.....NO. 802
COVER.....NO. 802-VENTED
W/ 16 ¾"DIA HOLES

NOTES:

1. SLEEVE SHALL BE 27" DIAMETER PVC PIPE (ASTM F769) WITH POLYMER SEALANT TOP & BOTTOM OR OTHER SLEEVE MATERIAL AS APPROVED BY ENGINEER. SUBMIT ALTERNATE SLEEVE MATERIAL FOR REVIEW.
2. INSTALL SEQUENCE:
   a. CUT ROUND HOLE IN PAVEMENT.
   b. PLACE MANHOLE COVER & FRAME AT FINISH GRADE.
   c. PRESS SLEEVE & FRAME INTO MANHOLE CONE TO SEAT.
   d. PLACE REBAR & CONCRETE TO GRADE.

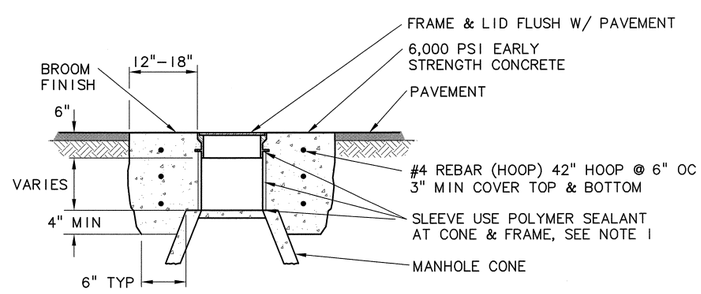

SECTION

STANDARD MANHOLE FRAME & COVER ADJUSTMENT (3/-)

SCALE: NTS

CITY PROJECT NUMBER P21080

NO.	DATE	REVISION	BY

DESIGNED: SMG
DRAWN: DAK
CHECKED: WSE
APPROVED: WHH

D-2
25 OF 30

REGISTERED PROFESSIONAL ENGINEER 17140 OREGON MAY 11, 1988 SUSAN M. GUTHRIE
RENEWS 12-31-14

SCALE VERT: AS SHOWN HORIZ: AS SHOWN

NOTICE
0 1
IF THIS BAR DOES NOT MEASURE 1" THEN DRAWING IS NOT TO SCALE

PROJECT NAME: CITY OF SPRINGFIELD, OREGON
FRANKLIN/McVAY SANITARY SEWER EXTENSION
PROJECT NUMBER P21080

SHEET TITLE: MISCELLANEOUS SEWER DETAILS

MSA
Murray, Smith & Associates, Inc.
Engineers/Planners
121 S.W. Salmon, Suite 900 Portland, Oregon 97204
PHONE 503-225-9010
FAX 503-225-9022

MSA PROJECT: 13-1469.201 DATE: MAY 2014

G:\PDX_Projects\13\1469\CAD\SHEETS\13-1469-202-OR-D.dwg D-2 4/28/2014 4:07 PM DKT 18.2s (LMS Tech)

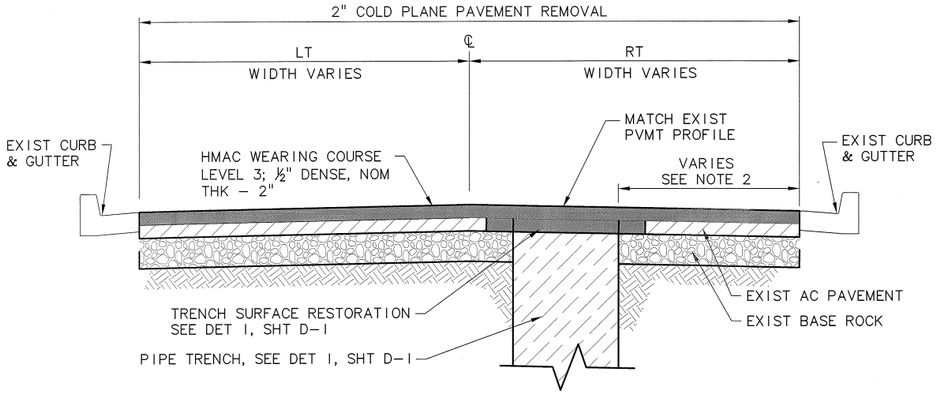

STA 0+80 TO STA 10+70 (MCVAY HWY)

NOTES:

1. PAY LIMITS FOR 2" COLD PLANE AND 2" INLAY ARE INDICATED ABOVE AND INCLUDE THE PORTION OF THE PIPE TRENCH WIDTH THAT IS IN THE ROADWAY. WHERE NO CURB AND GUTTER EXISTS, EXTEND 2" COLD PLANE AND 2"INLAY 6' BEYOND FOG LINE OR AS DIRECTED BY THE ENGINEER. COORDINATE WITH THE ENGINEER FOR FINAL PAVING LIMITS AT PROJECT ENDS.

2. AFTER THE FINAL SAW CUT IS MADE FOR THE TRENCH "TEE CUT", IN AREAS WHERE THE REMAINING STRIP OF EXISTING ASPHALT IS LESS THAN THREE FEET IN WIDTH BETWEEN THE CUT AND THE EDGE OF AC PAVEMENT, THE REMAINING STRIP OF EXISTING ASPHALT SHALL BE REMOVED AND REPLACED AS FOLLOWS:

A. REMOVE FULL DEPTH OF ASPHALT AND BASE TO 20" BELOW FINAL GRADE. PLACE 12-INCH THICK COMPACTED ¾"-0" CRUSHED ROCK TO 8 INCHES BELOW FINAL GRADE, THEN PLACE 8-INCH THICK LEVEL 3, ½" DENSE, HMAC (6-INCH THICK BASE COURSE AND 2-INCH THICK INLAY/OVERLAY). PLACE ASPHALT IN 3-INCH MAXIMUM LIFTS. NO SEPARATE PAYMENT WILL BE MADE FOR THE ADDITIONAL BASE ROCK.

3. FOR TRANSITION BETWEEN INLAY AND OVERLAY, SEE DETAIL 3, THIS SHEET.

2-INCH COLD PLANE AND 2-INCH INLAY (1/–)

SCALE: NTS

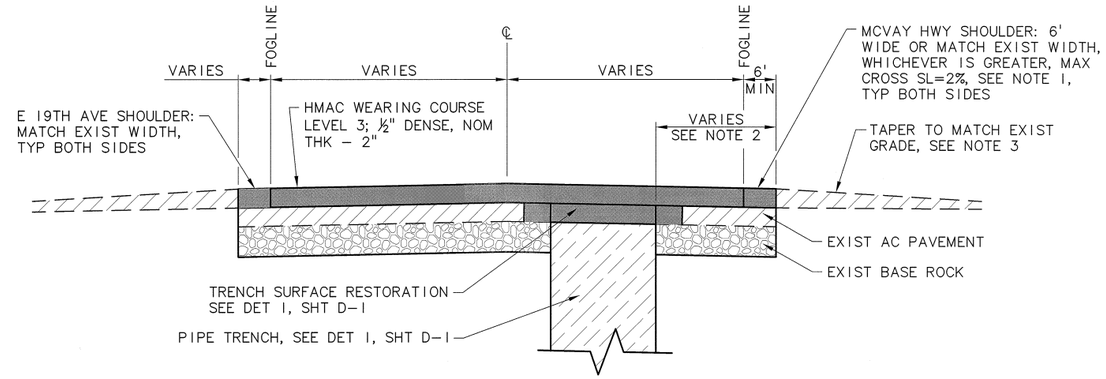

STA 10+70 TO STA 35+40 (MCVAY HWY) (APPROX)
STA A0+00 TO STA A8+74 (E 19TH AVE)

NOTES:

1. IF EXISTING PAVED SHOULDER ON MCVAY HIGHWAY IS LESS THAN 6 FEET WIDE, EXTEND SHOULDER PAVEMENT TO 6 FEET IN WIDTH. WHERE EXTENDING SHOULDER, REMOVE EXISTING SHOULDER MATERIAL BEYOND EDGE OF EXISTING ASPHALT TO 20 INCHES BELOW FINAL GRADE. CONSTRUCT 12-INCH THICK ¾"-0" COMPACTED BASE ROCK AND PLACE 8-INCH THICK LEVEL 3, ½-INCH DENSE, HOT MIX ASPHALT CONCRETE (6-INCH THICK BASE COURSE AND 2-INCH THICK OVERLAY).

2. AFTER THE FINAL SAW CUT IS MADE FOR THE TRENCH "TEE CUT", IN AREAS WHERE THE REMAINING STRIP OF EXISTING ASPHALT IS LESS THAN THREE FEET IN WIDTH BETWEEN THE CUT AND THE EDGE OF AC PAVEMENT, THE REMAINING STRIP OF EXISTING ASPHALT SHALL BE REMOVED AND REPLACED AS FOLLOWS:

A. REMOVE FULL DEPTH OF ASPHALT AND BASE TO 20" BELOW FINAL GRADE. PLACE 12-INCH THICK COMPACTED ¾"-0" CRUSHED ROCK TO 8 INCHES BELOW FINAL GRADE, THEN PLACE 8-INCH THICK LEVEL 3, ½" DENSE, HMAC (6-INCH THICK BASE COURSE AND 2-INCH THICK INLAY/OVERLAY). PLACE ASPHALT IN 3-INCH MAXIMUM LIFTS. NO SEPARATE PAYMENT WILL BE MADE FOR THE ADDITIONAL BASE ROCK.

3. FOR EXISTING GRAVEL AREA BEYOND EDGE OF SHOULDER, PLACE ¾"-0" CRUSHED ROCK AND TAPER FROM 2-INCH THICK TO 0-INCH THICK OVER A 5-FOOT WIDTH. NO SEPARATE PAYMENT WILL BE MADE FOR SHOULDER ROCK. FOR EXISTING PAVED AREA BEYOND EDGE OF SHOULDER THAT IS NOT A DRIVEWAY OR SIDE STREET, TAPER HMAC OVERLAY FROM 2-INCH THICK AT EDGE OF SHOULDER TO 0-INCH THICK AT RIGHT-OF-WAY, OR AS OTHERWISE APPROVED BY THE ENGINEER. FOR ASPHALT APPROACHES AT DRIVEWAYS AND SIDE STREETS, SEE DETAIL 4, THIS SHEET.

2-INCH HOT MIX ASPHALT CONCRETE OVERLAY-TYPICAL SECTION (2/–)

SCALE: NTS

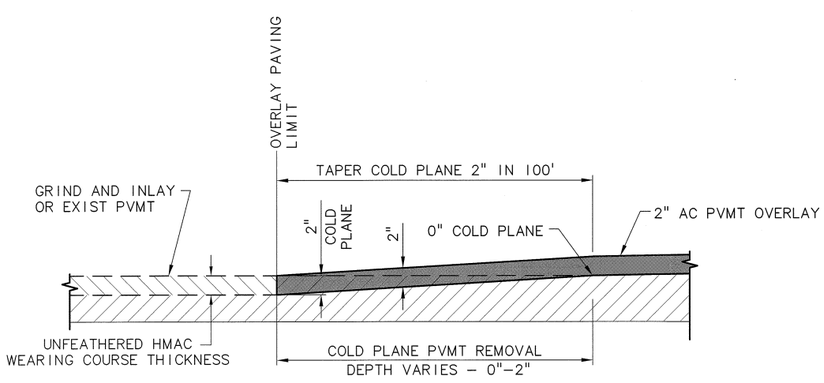

MATCHING PAVEMENT OVERLAY AT TRANSITION BETWEEN GRIND AND INLAY AND AT PROJECT ENDS (3/–)

SCALE: NTS

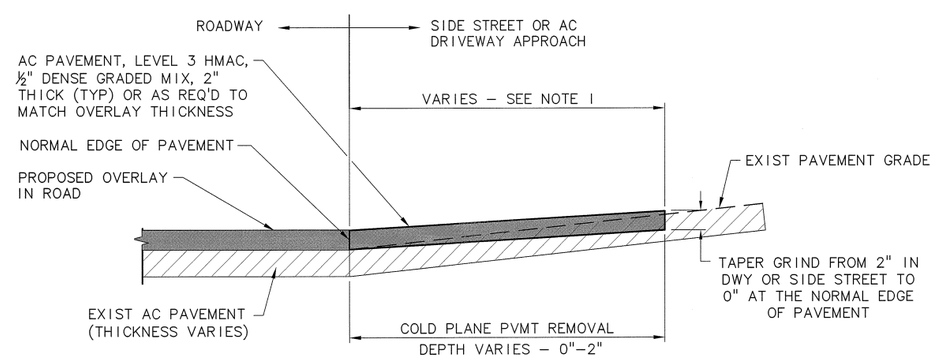

NOTES:

1. FOR ASPHALT DRIVEWAY APPROACHES, EXTEND OVERLAY TO RIGHT-OF WAY, OR AS OTHERWISE APPROVED BY THE ENGINEER. FOR ASPHALT SIDE STREET APPROACHES, EXTEND OVERLAY 20 FEET INTO SIDE STREET FROM NORMAL EDGE OF PAVEMENT, OR AS OTHERWISE APPROVED BY THE ENGINEER.

TYPICAL ASPHALT DRIVEWAY OR SIDE STREET APPROACH (4/–)

SCALE: NTS

CITY PROJECT NUMBER P21080

NO.	DATE	REVISION	BY

D-3
26 OF 30

DESIGNED: SMG
DRAWN: DAK
CHECKED: WSE
APPROVED: WHH

REGISTERED PROFESSIONAL ENGINEER 17140 OREGON JUSTIN M. GIBBS RENEWS 12-31-14

SCALE VERT: AS SHOWN HORIZ: AS SHOWN

NOTICE
0 1
IF THIS BAR DOES NOT MEASURE 1" THEN DRAWING IS NOT TO SCALE

PROJECT NAME: CITY OF SPRINGFIELD, OREGON
FRANKLIN/McVAY SANITARY SEWER EXTENSION
PROJECT NUMBER P21080

SHEET TITLE: MISCELLANEOUS DETAILS

MSA
Murray, Smith & Associates, Inc.
Engineers/Planners
121 S.W. Salmon, Suite 900
Portland, Oregon 97204
PHONE 503-225-9010
FAX 503-225-9022

MSA PROJECT: 13-1469.201 DATE: MAY 2014

G:\PDX_Projects\13\1469\CAD\SHEETS\13-1469-202-OR-D.dwg D-3 4/29/2014 4:17 PM DKT 18.2s (LMS Tech)

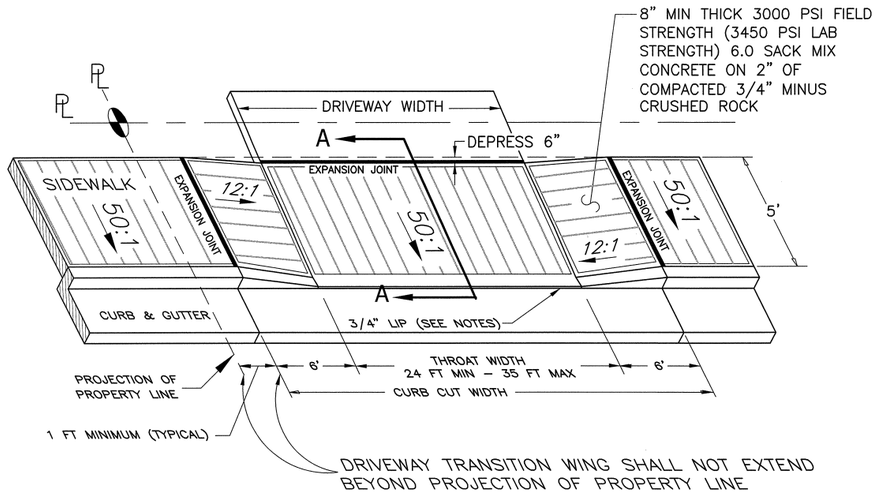

SECTION A – A

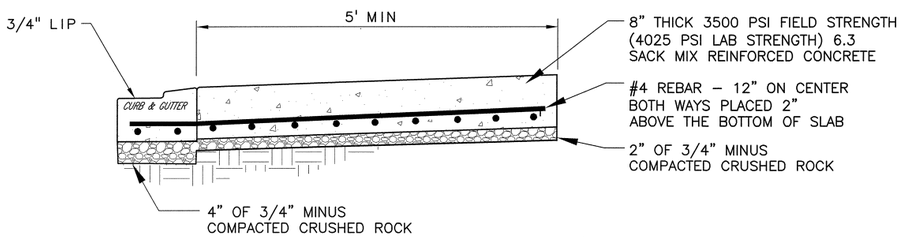

NOTES

* NO ABOVE-GROUND FACILITIES (FIRE HYDRANTS, POWER POLES, CATCH BASINS, VALVES, J-BOXES, ETC.) SHALL BE PERMITTED WITHIN THE APRON OR RAMP AREA
* DRIVEWAY (THROAT) WIDTH SHALL BE BETWEEN 24 FEET (MINIMUM) AND 35 FEET (MAXIMUM) IN ACCORDANCE WITH CITY PERMITS.
* ALL SURFACES SHALL HAVE A BROOM FINISH.
* REFER TO STANDARD DRAWING 3-7 FOR CURB CUT DETAILS
* CONCRETE WITHIN APPROACH SHALL BE 8" THICK (MIN) CONCRETE ON 2" OF 3/4" MINUS CRUSHED ROCK.
* REINFORCEMENT IS REQUIRED. USE #4 REBAR – 12" ON CENTER – BOTH WAYS – PLACED 2" ABOVE THE BOTTOM OF THE SLAB
* A CONTRACTION (SCORE) JOINT SHALL BE ADDED IN THE CENTER OF THE APRON.
* SIDEWALKS, ACCESS RAMPS, AND RESIDENTIAL DRIVEWAYS SHALL BE 3000 PSI FIELD STRENGTH (3450 PSI LAB STRENGTH) 6.0 SACK MIX CONCRETE
* CURBS & COMMERCIAL DRIVEWAYS SHALL BE 3500 PSI FIELD STRENGTH (4025 PSI LAB STRENGTH) 6.3 SACK MIX CONCRETE

SIDEWALK ACCESS RAMP NOTES

THIS DRIVEWAY APPROACH MAY NOT BE USED AS A SIDEWALK ACCESS RAMP.

COMMERCIAL CURBSIDE REINFORCED DRIVEWAY APRON (1/–)

SCALE: NTS

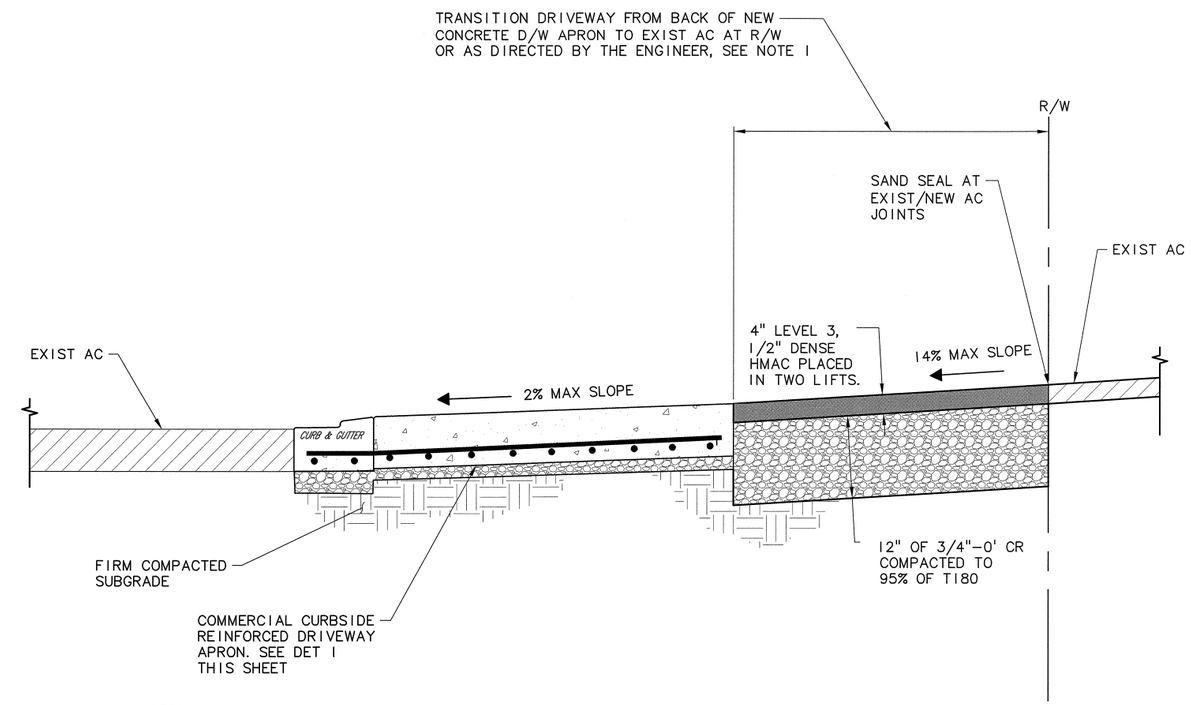

NOTES:

1. REMOVE EXISTING AC, BASE AND SUBGRADE TO 16-INCH DEPTH AND REPLACE WITH 12" THICK 3/4"-0" CR AND 4" THICK LEVEL 3, 1/2" DENSE HMAC.

TRANSISTION BEHIND CONCRETE DRIVEWAY (2/–)

SCALE: NTS

CITY PROJECT NUMBER P21080

NO.	DATE	REVISION	BY

DESIGNED: SMG
DRAWN: DAK
CHECKED: WSE
APPROVED: WHH

D-4
27 OF 30

REGISTERED PROFESSIONAL ENGINEER 17140 OREGON MAY 11, 1982 SUSAN M. GIES
RENEWS 12-31-14

SCALE VERT: AS SHOWN HORIZ: AS SHOWN
NOTICE 0 1 IF THIS BAR DOES NOT MEASURE 1" THEN DRAWING IS NOT TO SCALE

PROJECT NAME: CITY OF SPRINGFIELD, OREGON
FRANKLIN/McVAY SANITARY SEWER EXTENSION
PROJECT NUMBER P21080

SHEET TITLE: MISCELLANEOUS DETAILS

MSA
Murray, Smith & Associates, Inc.
Engineers/Planners
121 S.W. Salmon, Suite 900 Portland, Oregon 97204
PHONE 503-225-9010
FAX 503-225-0022

MSA PROJECT: 13-1469.201 DATE: MAY 2014

G:\PDX_Projects\13\1469\CAD\SHEETS\13-1469-202-OR-D.dwg D-4 4/28/2014 4:07 PM DKT 18.2s (LMS Tech)

NOTES:

1. CONSTRUCT SIDEWALK CROSS SLOPE TO 1.5% TOWARD THE ROADWAY WITH A MAXIMUM OF 2.0%, EXCEPT WHERE TRANSITION BACK TO EXISTING GRADES OCCURS.

HANDRAIL NOTES

1. FURNISH & INSTALL THREE-RAIL HANDRAIL FROM STA 0+19.24 TO STA 0+48.57, SEE ODOT STD DWGS RD770 & RD771
2. FURNISH & INSTALL THREE-RAIL HANDRAIL FROM STA 0+63.41 TO STA 0+90.56, SEE ODOT STD DWGS RD770 & RD771
3. FURNISH & INSTALL THREE-RAIL HANDRAIL FROM STA 0+28.06 TO STA 0+59.30, SEE ODOT STD DWGS RD770 & RD771
4. FURNISH & INSTALL THREE-RAIL HANDRAIL FROM STA 0+76.39 TO STA 1+10.78, SEE ODOT STD DWGS RD770 & RD771

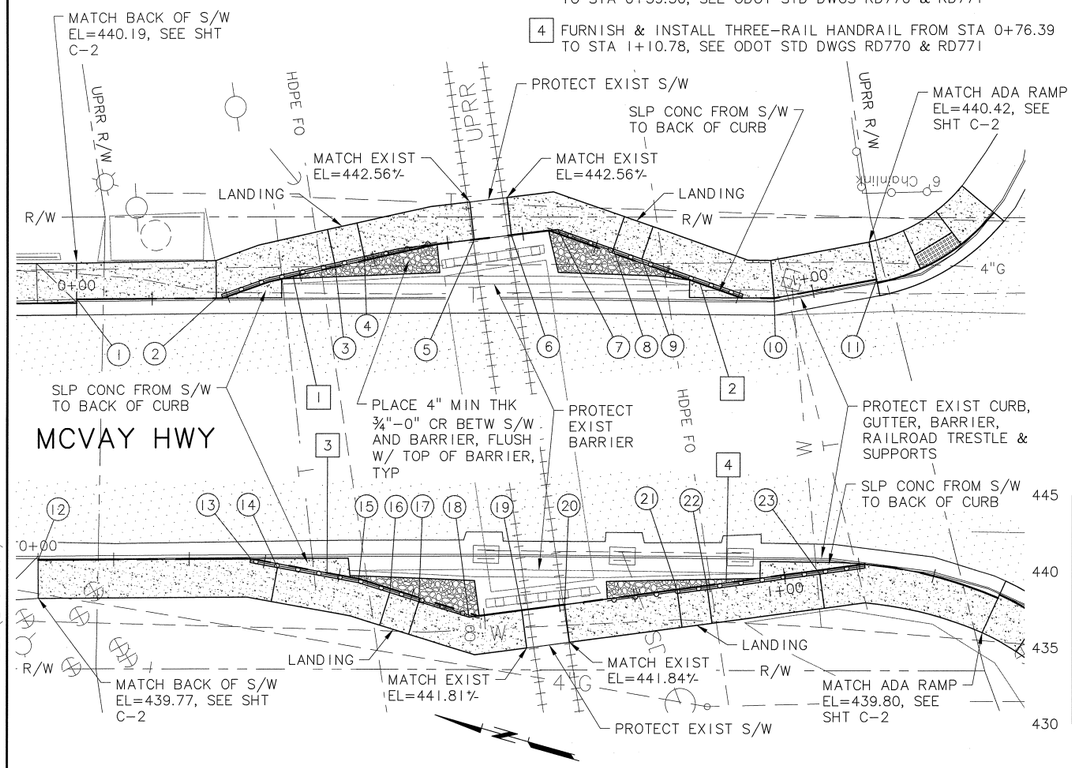

PLAN

SCALE: 1"=10'

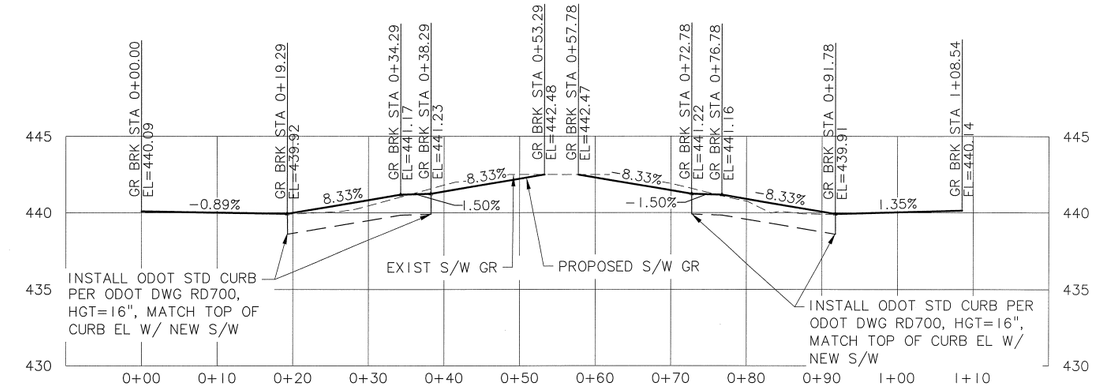

PROFILE – FRONT OF PROPOSED SIDEWALK, EAST SIDE OF MCVAY HWY

SCALE: 1"=10' HORIZ, 1"=5' VERT

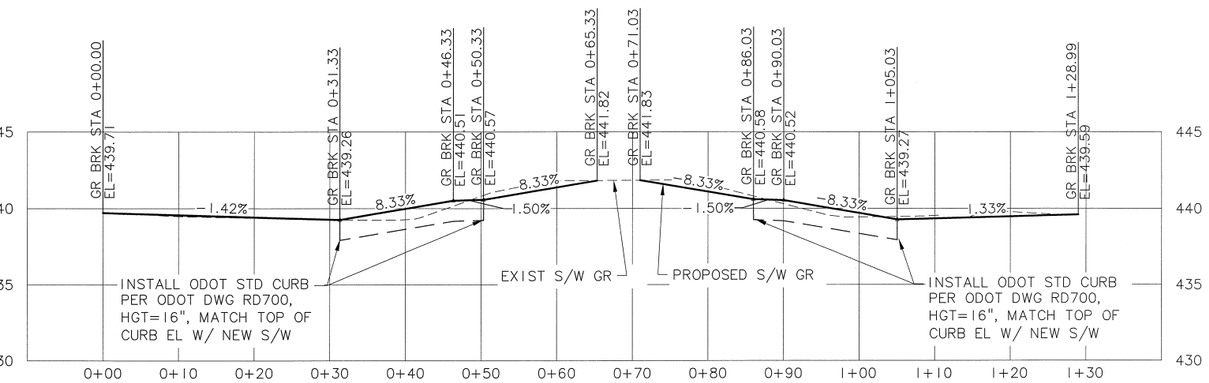

PROFILE – FRONT OF PROPOSED SIDEWALK, WEST SIDE OF MCVAY HWY

SCALE: 1"=10' HORIZ, 1"=5' VERT

COORDINATES OF CRITICAL POINTS

POINT NO.	NORTHING	EASTING	ELEVATION
1	875763.12	4256219.72	440.09
2	875745.38	4256224.85	439.92
3	875731.60	4256233.62	441.17
4	875728.08	4256235.53	441.23
5	875714.72	4256241.64	442.48
6	875710.15	4256243.55	442.47
7	875704.45	4256245.94	441.91
8	875696.69	4256245.50	441.22
9	875692.69	4256245.28	441.16
10	875674.45	4256245.13	439.91
11	875661.96	4256250.97	440.14

COORDINATES OF CRITICAL POINTS

POINT NO.	NORTHING	EASTING	ELEVATION
12	875758.51	4256185.37	439.71
13	875731.52	4256193.21	439.31
14	875727.79	4256193.07	439.26
15	875716.98	4256194.13	440.21
16	875712.61	4256194.03	440.51
17	875708.61	4256193.94	440.57
18	875701.64	4256193.79	441.22
19	875695.19	4256196.60	441.82
20	875689.96	4256198.88	441.83
21	875676.22	4256204.87	440.58
22	875672.35	4256206.02	440.52
23	875658.61	4256212.03	439.27

CITY PROJECT NUMBER P21080

NO.	DATE	REVISION	BY

D-5
28 OF 30

DESIGNED: SMG
DRAWN: DAK
CHECKED: WSE
APPROVED: WHH

REGISTERED PROFESSIONAL ENGINEER 17140 OREGON JANUARY 14, 1986 SUSAN M. ELIA
RENEWS 12-31-14

SCALE VERT: AS SHOWN HORIZ: AS SHOWN

NOTICE
IF THIS BAR DOES NOT MEASURE 1" THEN DRAWING IS NOT TO SCALE
0 1

PROJECT NAME: CITY OF SPRINGFIELD, OREGON
FRANKLIN/McVAY SANITARY SEWER EXTENSION
PROJECT NUMBER P21080

SHEET TITLE: SIDEWALK AT UPRR CROSSING

MSA
Murray, Smith & Associates, Inc.
Engineers/Planners
121 S.W. Salmon, Suite 900 Portland, Oregon 97204
PHONE 503-225-9010
FAX 503-225-9022

MSA PROJECT: 13-1469.201
DATE: MAY 2014

G:\PDX_Projects\13\1469\CAD\SHEETS\13-1469-202-OR-D.dwg D-5 4/29/2014 3:59 PM DKT 18.2s (LMS Tech)

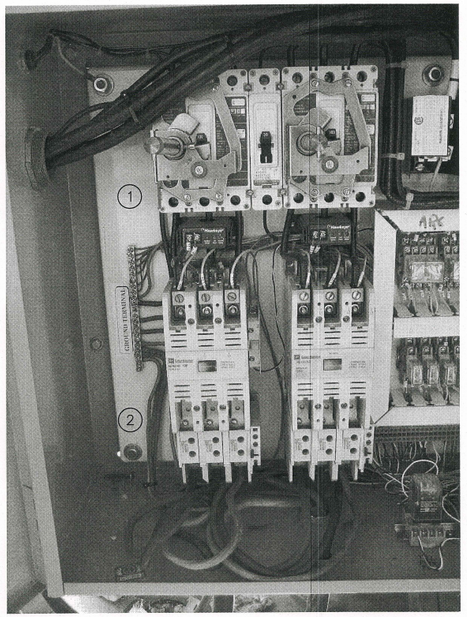

3

DETAIL NOTES

1. REPLACE TWO (2) EXISTING 100A MCP BREAKERS WITH NEW 30A RATED MCP BREAKERS.
2. REPLACE OVERLOAD HEATER ELEMENTS WITH HEATERS RATED FOR NEW 5HP PUMPS.
3. REPLACE PUMP CABLES WITH NEW CABLES. REMOVE AND REPLACE EXISTING 2" EXPLOSION-PROOF SEAL-OFFS. SEE SHEET C-13.

MOTOR STARTER MODIFICATIONS

NOT TO SCALE

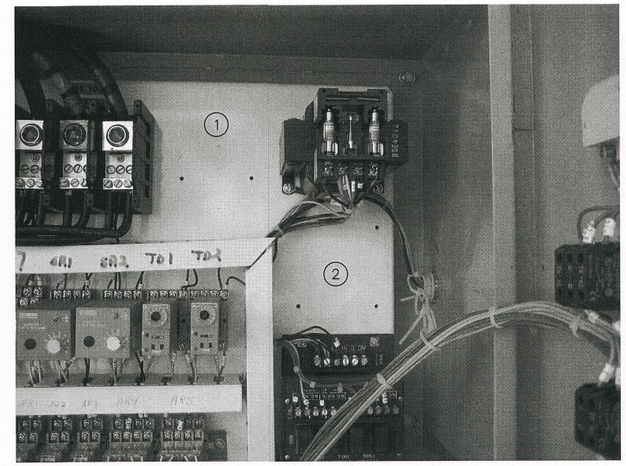

DETAIL NOTES

1. MOVE EXISTING CONTROL POWER TRANSFORMER TO THIS LOCATION.
2. ADD DIN RAIL AND MOUNTING BASES FOR NEW FLYGT MINI-CAS RELAYS AND INTERPOSING RELAYS.

CONTROL DEVICE ADDITION DETAIL

NOT TO SCALE

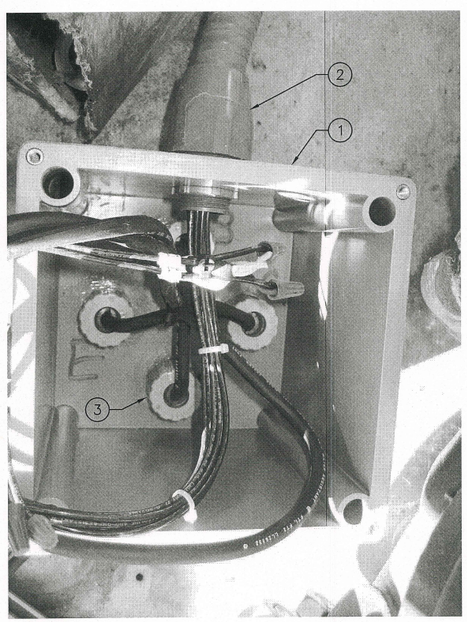

DETAIL NOTES

1. REPLACE EXISTING 6" x 6" x 6" JUNCTION BOX WITH NEMA 7 RATED JUNCTION BOX.
2. PROVIDE EXPLOSION PROOF SEAL-OFF FITTING IN CONDUIT TO CONTROL PANEL. RECONNECT CONDUIT AS REQUIRED. ADD CONDUCTORS FOR NEW FLOAT SWITCH.
3. ADD NEW OVERFLOW FLOAT SWITCH. PROVIDE APPROVED CABLE GRIP FITTINGS FOR FIVE (5) FLOAT SWITCH CABLE ENTRIES INTO WETWELL FROM NEW NEMA 7 JUNCTION BOX.

FLOAT SWITCH JUNCTION BOX MODIFICATION

NOT TO SCALE

R&W ENGINEERING, INC.
"Engineering Integrated Solutions"
9615 S.W. Allen Boulevard
Suite 107
Beaverton, Oregon 97005
Phone: (503) 726-3300
Fax: (503) 726-3326
E-mail: rweng@rweng.com
Project No.: 483.082.001 Contact: GREGG SCHOLZ

CITY PROJECT NUMBER P21080

NO.	DATE	REVISION	BY

REGISTERED PROFESSIONAL ENGINEER OREGON JULY 16, 1982 GREGG H. SCHOLZ EXPIRES 6/30/2014

DESIGNED: GHS
DRAWN: DPR
CHECKED: GHS
APPROVED: WHH

SCALE VERT: AS SHOWN HORIZ: AS SHOWN
NOTICE 0 1 IF THIS BAR DOES NOT MEASURE 1" THEN DRAWING IS NOT TO SCALE

PROJECT NAME: CITY OF SPRINGFIELD, OREGON FRANKLIN/McVAY SANITARY SEWER EXTENSION PROJECT NUMBER P21080

SHEET TITLE: ELECTRICAL DETAILS

MSA Murray, Smith & Associates, Inc. Engineers/Planners
121 S.W. Salmon, Suite 900 Portland, Oregon 97204
PHONE 503-225-9010 FAX 503-225-9022

MSA PROJECT: 13-1469.201 DATE: APRIL 2014

W:\WF\483_Murray Smith Assoc\082_Springfield Nugget Way PS\001_Electrical\DWG\E-01.dwg Layout1 4/30/2014 9:12 AM EVI 19.1s (LMS Tech)

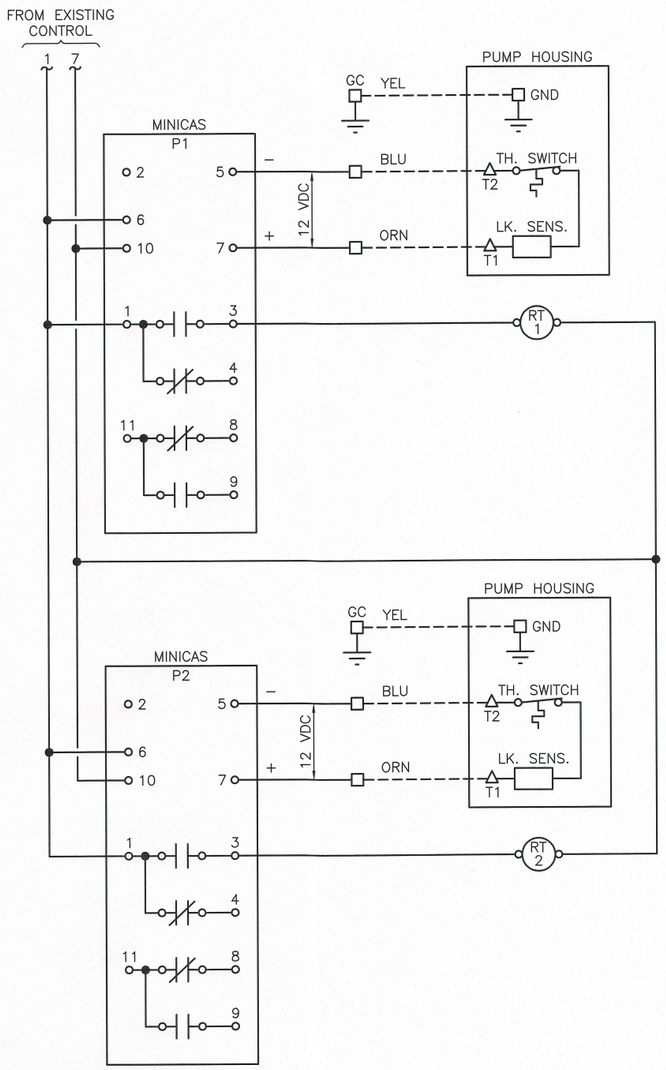

PUMP MONITORING SCHEMATIC

NOT TO SCALE

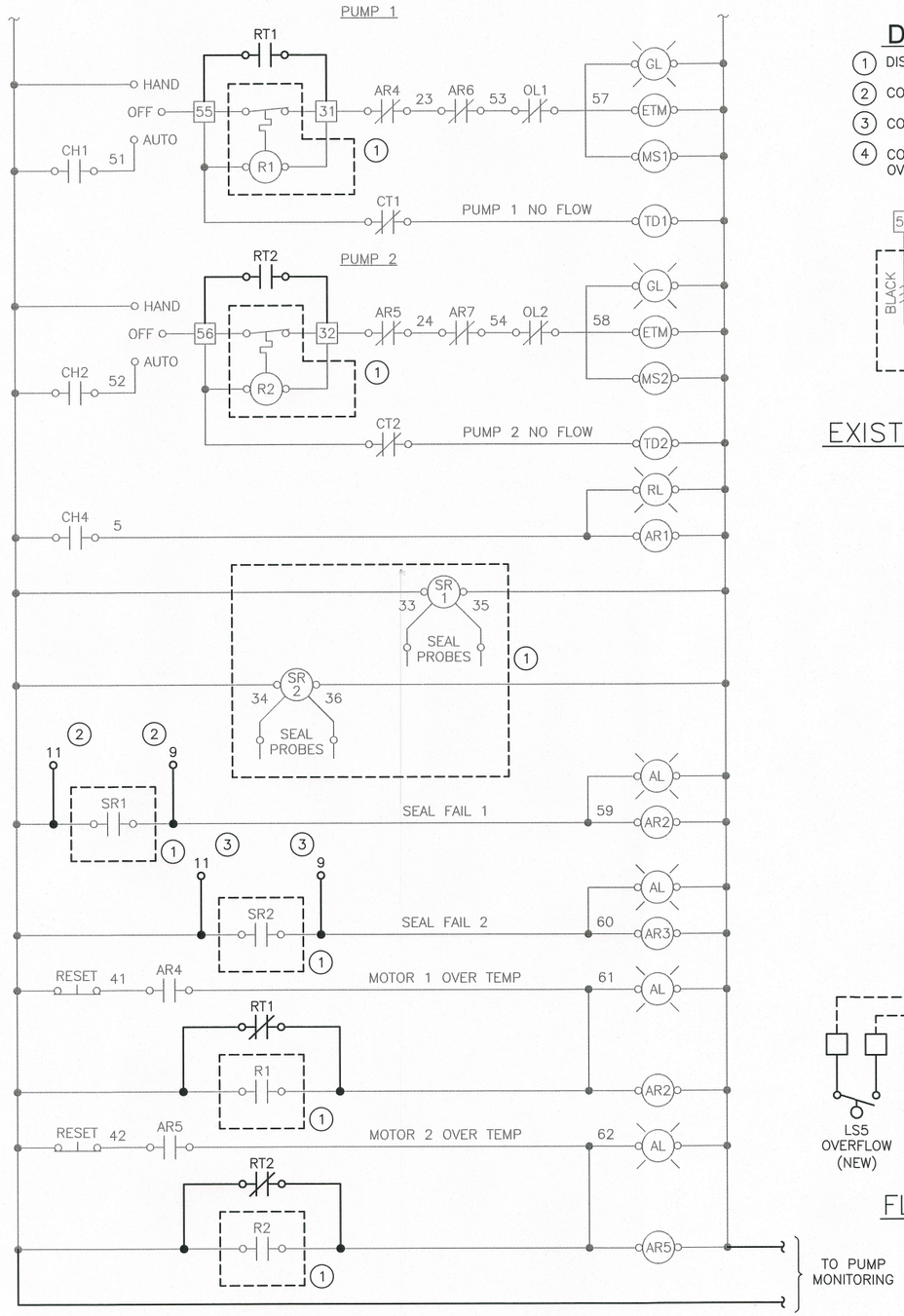

EXISTING CONTROL SCHEMATIC

NOT TO SCALE

DETAIL NOTES

1. DISCONNECT EXISTING CONTROLS.
2. CONNECT TO MINICAS P1.
3. CONNECT TO MINICAS P2.
4. CONNECT CHANNEL 3 CONTACT TO EXISTING TELEMETRY FOR OVERFLOW ALARM.

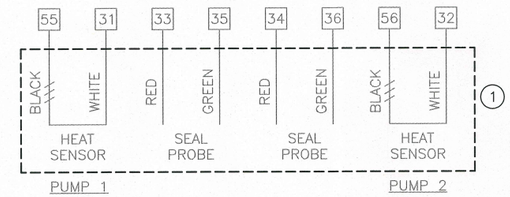

EXISTING CONTROL MODIFICATIONS

NOT TO SCALE

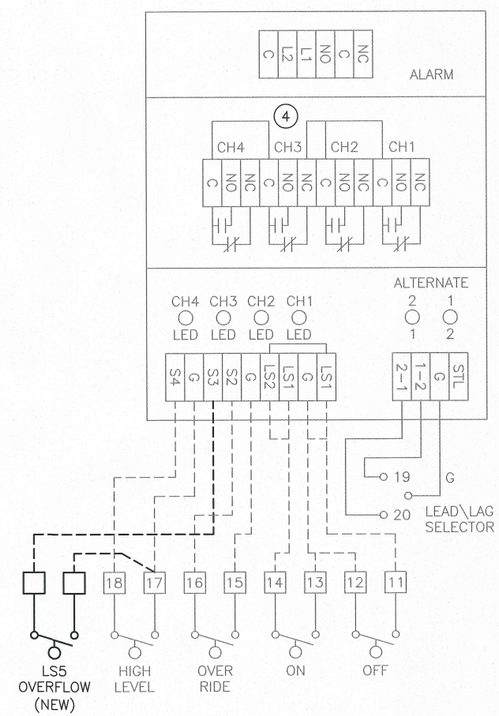

FLOAT SWITCH CONNECTIONS

NOT TO SCALE

R&W ENGINEERING, INC.
"Engineering Integrated Solutions"
9615 S.W. Allen Boulevard
Suite 107
Beaverton, Oregon 97005
Phone: (503) 726-3300
Fax: (503) 726-3328
E-mail: rweng@rweng.com
Project No.: 483.082.001 Contact: GREGG SCHOLZ

CITY PROJECT NUMBER P21080

NO.	DATE	REVISION	BY

DESIGNED: GHS
DRAWN: DPR
CHECKED: GHS
APPROVED: WHH

E-2
30 OF 30

REGISTERED PROFESSIONAL ENGINEER
GREGG H. SCHOLZ
OREGON
JULY 16, 1982
EXPIRES 6/30/2014

SCALE VERT: AS SHOWN HORIZ: AS SHOWN

NOTICE
IF THIS BAR DOES NOT MEASURE 1" THEN DRAWING IS NOT TO SCALE

PROJECT NAME: CITY OF SPRINGFIELD, OREGON
FRANKLIN/McVAY SANITARY SEWER EXTENSION
PROJECT NUMBER P21080

SHEET TITLE: ELECTRICAL SCHEMATICS

Murray, Smith & Associates, Inc.
Engineers/Planners
121 S.W. Salmon, Suite 900 PHONE 503-225-9010
Portland, Oregon 97204 FAX 503-225-9022

MSA PROJECT: 13-1469.201 DATE: APRIL 2014

W:\WF\483_Murray Smith Assoc\082_Springfield Nugget Way PS\001_Electrical\DWG\E-02.dwg Layout1 4/30/2014 9:15 AM EVI 19.1s (LMS Tech)

STANDARD DRAWINGS

STANDARD CURB & GUTTER

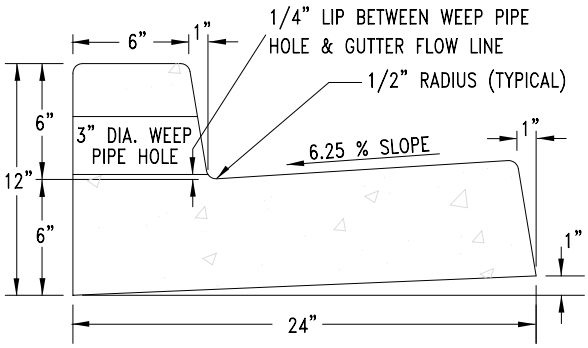

MOUNTABLE CURB & GUTTER

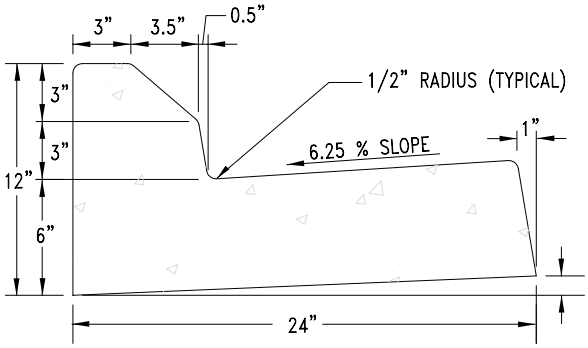

EXTRUDED CURB

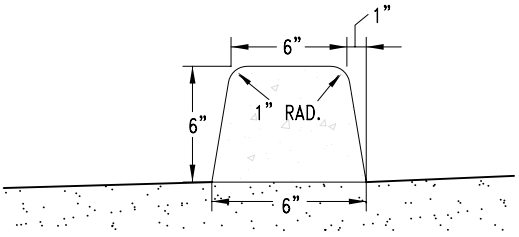

FULL DEPTH CURB

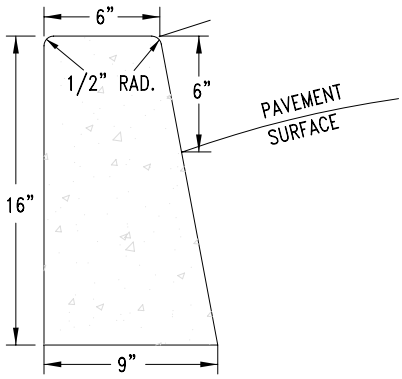

WEEP HOLES SHALL BE PLACED AT 75' O.C. OR AS OTHERWISE SPECIFIED REFER TO STD DWG. 3-XX FOR INSTALLATION DETAILS. IN NEW CONSTRUCTION, PLACE CONTRACTION JOINT OVER & IN FRONT OF PIPE

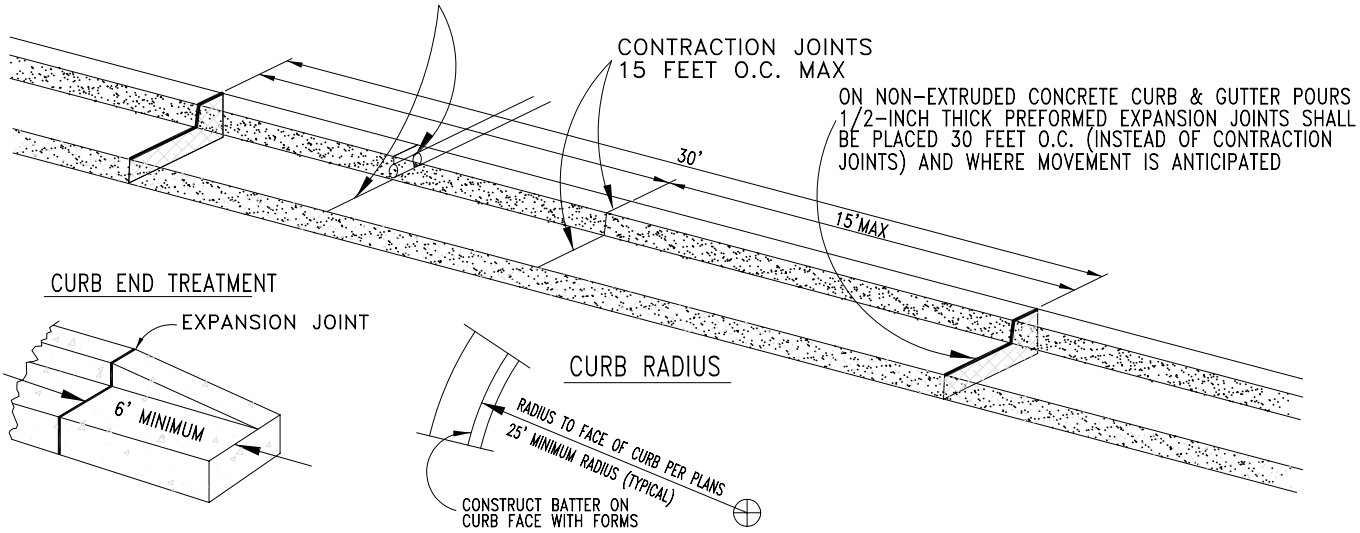

NOTES

* WHERE CONCRETE PAVEMENT WILL BE USED, CONTRACTION JOINTS SHALL BE PLACED TO MATCH TRANSVERSE CONTRACTION JOINT LOCATIONS IN STREET PAVEMENT AND 24" #5 REBAR TIE BARS SHALL BE PLACED IN GREEN CONCRETE.
* CURB AND GUTTER SURFACES SHALL HAVE A BROOM FINISH PARALLEL TO THE LENGTH OF THE CURB
* SIDEWALKS, ACCESS RAMPS, AND RESIDENTIAL DRIVEWAYS SHALL BE 3000 PSI FIELD STRENGTH (3450 PSI LAB STRENGTH) 6.0 SACK MIX CONCRETE
* CURBS & COMMERCIAL DRIVEWAYS SHALL BE 3500 PSI FIELD STRENGTH (4025 PSI LAB STRENGTH) 6.3 SACK MIX CONCRETE

NO	REVISION	DATE	BY	APPR.

CITY OF SPRINGFIELD
SPRINGFIELD
DEPT. OF PUBLIC WORKS

CURB & GUTTER

Al Peroutka City Engineer 2003

STANDARD DRAWING
3-5
2003

DO NOT USE THIS DETAIL FOR STANDARD CURB REMOVAL
REFER TO STANDARD DRAWING 3-7

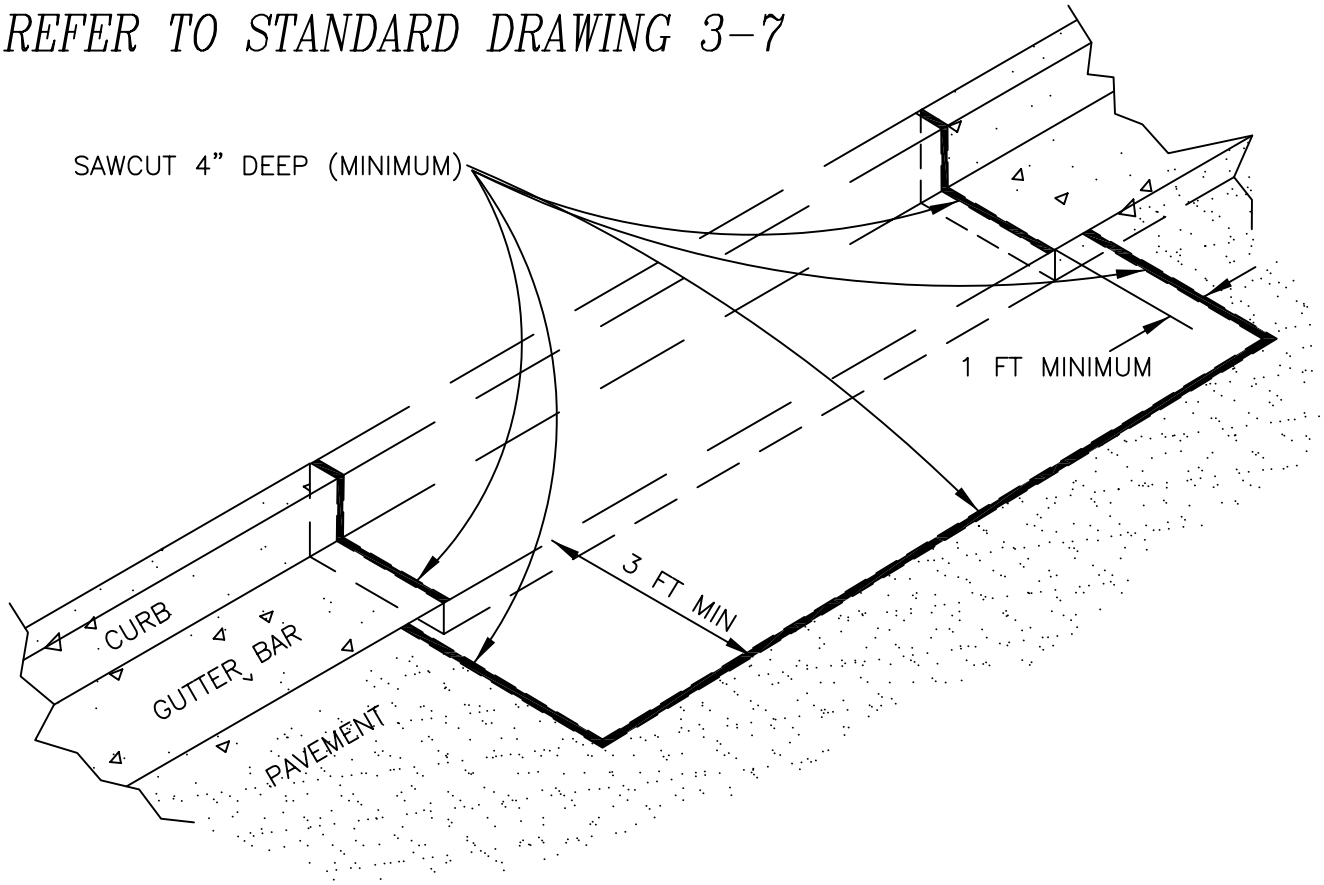

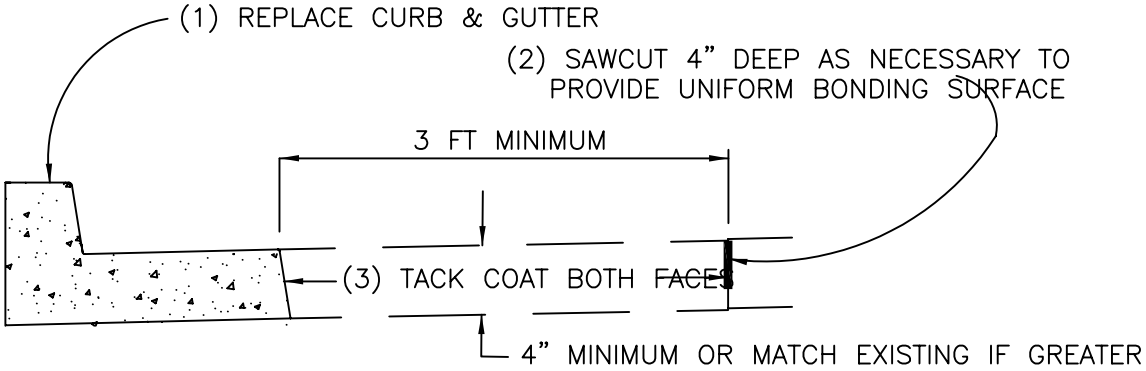

(4) PLACE HOT MIX ASPHALT AND USE MECHANICAL COMPACTION EQUIPMENT TO ACHIEVE REQUIRED DENSITY

(5) SEAL ALL JOINTS WITH POLYMERIZED ASPHALT AND SAND TO AVOID PICKUP

NOTES

* EXISTING GUTTER BAR SHALL NOT BE REMOVED WITHOUT PRIOR APPROVAL BY THE CITY
* CURB CUT WIDTH SHALL BE IN ACCORDANCE WITH PERMIT
* REFER TO SPRINGFIELD STANDARD SPECIFICATIONS FOR ROADWAY STRUCTURE COMPACTION REQUIREMENTS
* SIDEWALKS, ACCESS RAMPS, AND RESIDENTIAL DRIVEWAYS SHALL BE 3000 PSI FIELD STRENGTH (3450 PSI LAB STRENGTH) 6.0 SACK MIX CONCRETE
* CURBS & COMMERCIAL DRIVEWAYS SHALL BE 3500 PSI FIELD STRENGTH (4025 PSI LAB STRENGTH) 6.3 SACK MIX CONCRETE

NO	REVISION	DATE	BY	APPR.

CITY OF SPRINGFIELD
SPRINGFIELD
DEPT. OF PUBLIC WORKS

CURB & GUTTER
REMOVAL & REPLACEMENT

Al Peroutka City Engineer 2003

STANDARD DRAWING
3-8
2003

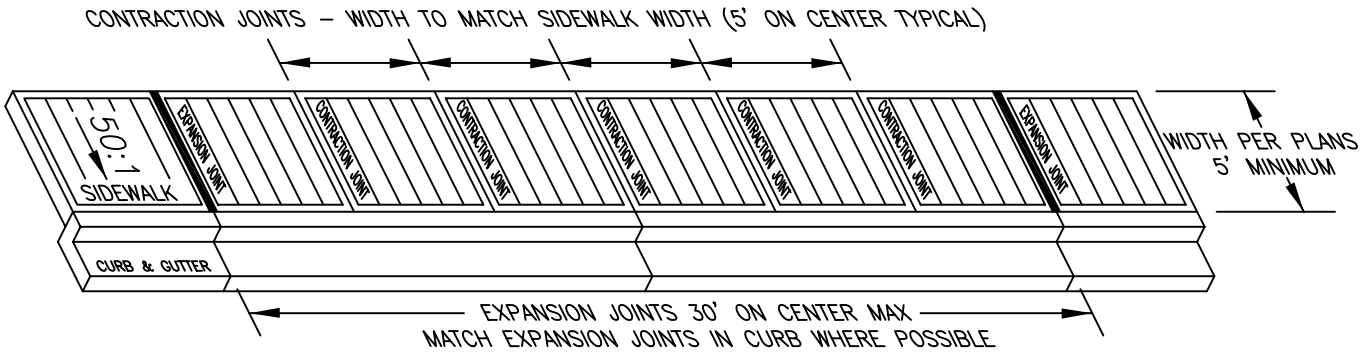

CURBSIDE SIDEWALK

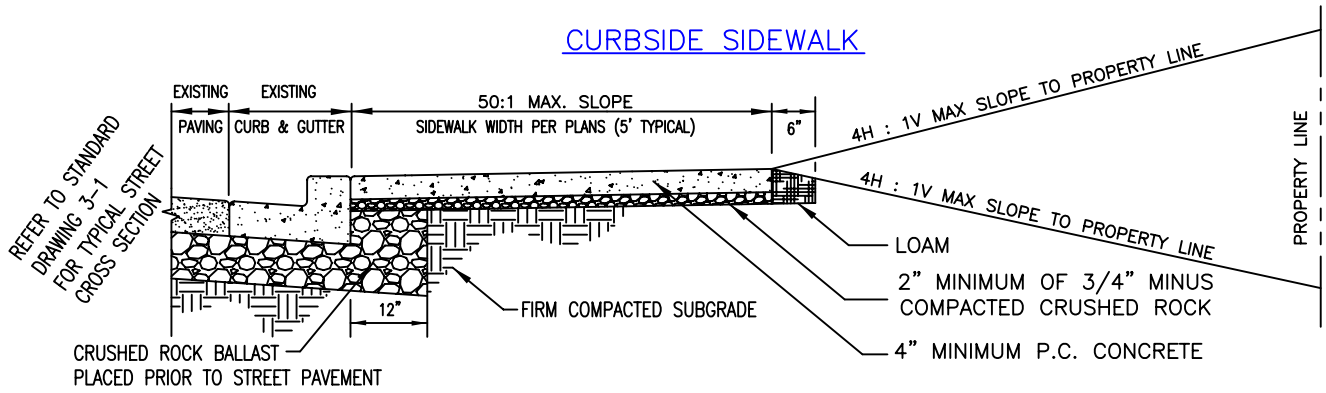

SETBACK SIDEWALK

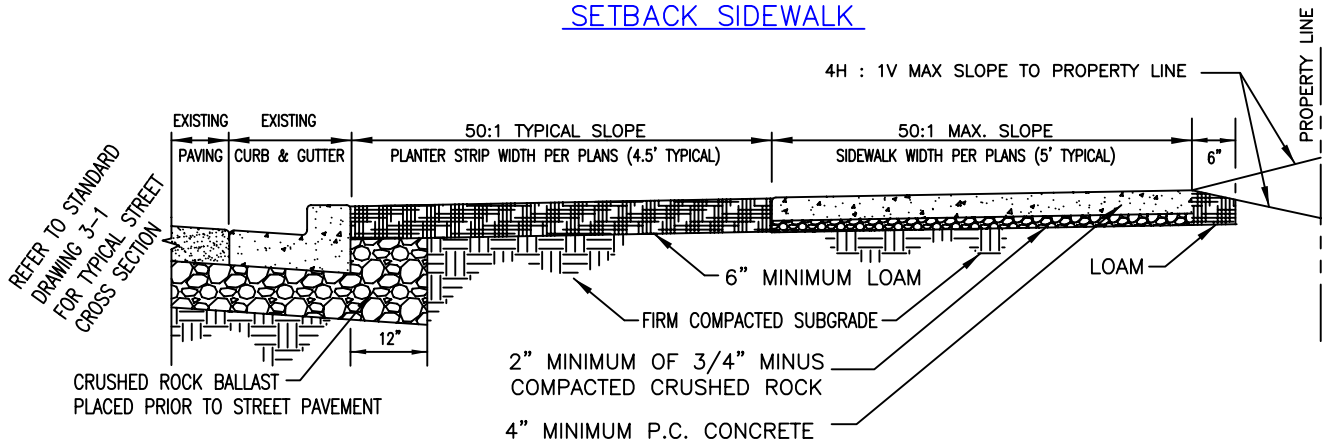

NOTES

* NO ABOVEGROUND FACILITIES (FIRE HYDRANTS, POWER POLES, CATCH BASINS, VALVES, J-BOXES, ETC.) SHALL BE PERMITTED WITHIN THE SIDEWALK AREA
* ALL SURFACES SHALL HAVE A BROOM FINISH.
* SIDEWALKS, ACCESS RAMPS, AND RESIDENTIAL DRIVEWAYS SHALL BE 3000 PSI FIELD STRENGTH (3450 PSI LAB STRENGTH) 6.0 SACK MIX CONCRETE
* CURBS & COMMERCIAL DRIVEWAYS SHALL BE 3500 PSI FIELD STRENGTH (4025 PSI LAB STRENGTH) 6.3 SACK MIX CONCRETE

NO	REVISION	DATE	BY	APPR.

CITY OF SPRINGFIELD
SPRINGFIELD
DEPT. OF PUBLIC WORKS

SIDEWALK CONSTRUCTION

Al Peroutka City Engineer 2003

STANDARD DRAWING
3-12
2003

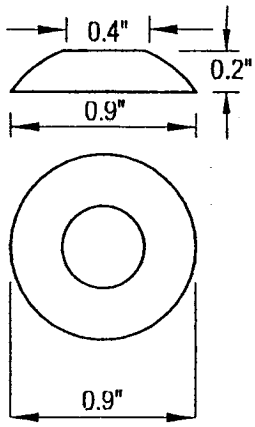

TRUNCATED DOME DETAIL

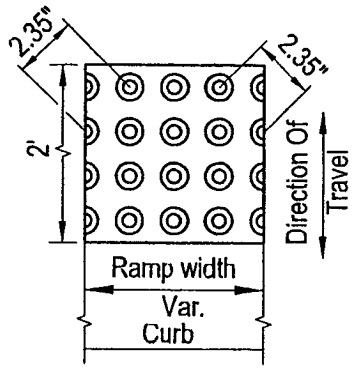

RAMP TEXTURE PATTERN DETAIL

Marked or intended crossing location

General Notes

1. Place truncated dome detectable warning texture in the lower 2' of throat of ramp only. Arrange domes using in-line pattern with the direction of travel. Color of texture to be safety yellow. For construction of sidewalk ramps outside of public right-of-way, check with State Building Codes for requirements regarding texturing of flares.
2. Sidewalk curb ramp slopes shown are relative to the true level horizon (zero bubble)
3. In alterations curb ramp slope(s) may be 10% for a max. rise of 6" or 12.5% for a max. rise of 3/4". Curb ramps, in alterations, need not exceed 6' in length.
4. Do not slope landing more than 2% in any direction.
5. Sidewalk ramp details are based on ORS 447.310 and proposed ADAAG Section 14, June 20, 1994.

V:\CITYSPEC\Standard Drawings - Revised\3-30.dwg-Domes & Notes.dwg, 06/06/2003 10:01:17 AM

NO	REVISION	DATE	BY	APPR.

CITY OF SPRINGFIELD
SPRINGFIELD
DEPT. OF PUBLIC WORKS

DETECTABLE WARNING TEXTURE
PEDESTRIAN ACCESS PATHS

Al Peroutka City Engineer 2003

STANDARD DRAWING
3-30
2003

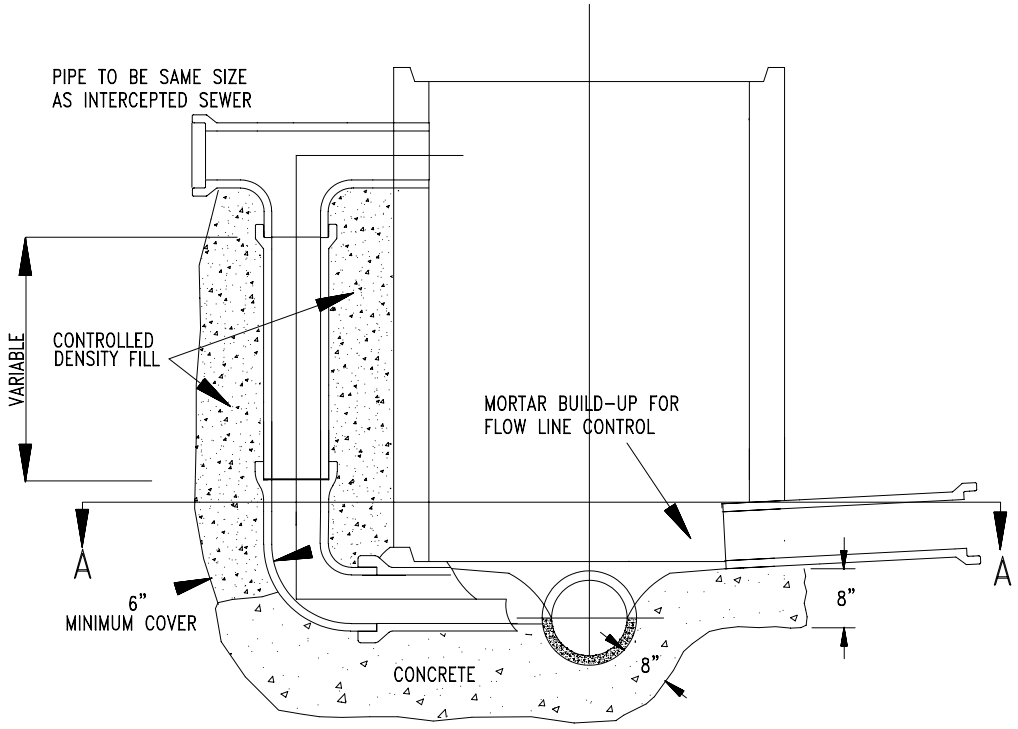

NOTE:

ALL CONCRETE MANHOLES, RISERS, CONES AND FLAT TOPS SHALL CONFORM TO ASTM C 478-61T.

PIPE CONNECTIONS TO MANHOLES SHALL BE "CORE-N-SEAL" OR EQUAL

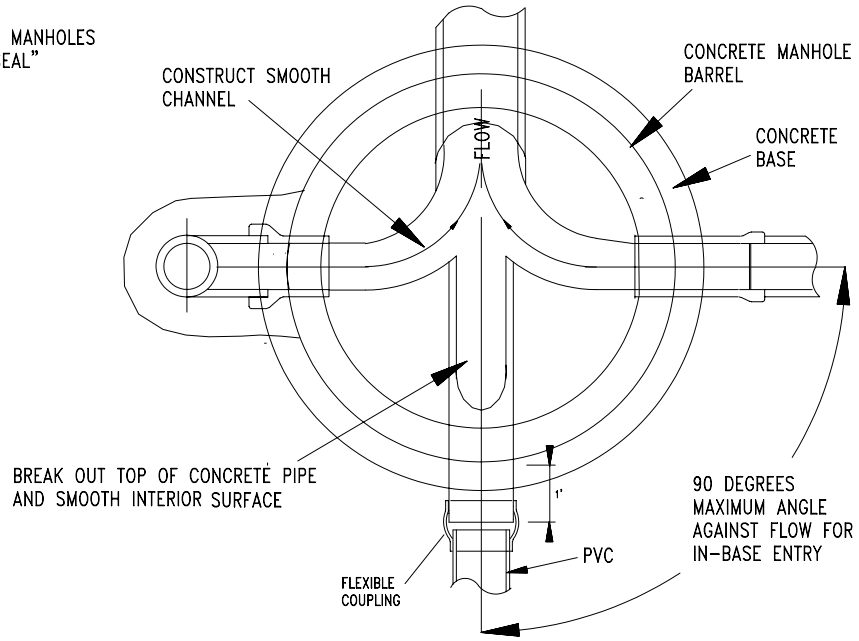

SEE STD. DWG. NO. 4-3

SECTION A-A

INSIDE DROP STRUCTURE
NOT ALLOWED

NO	REVISION	DATE	BY	APPR.

CITY OF SPRINGFIELD
DEPT. OF PUBLIC WORKS

225 FIFTH STREET
SPRINGFIELD, OR. 97477

STANDARD DROP STRUCTURE

STANDARD DRAWING

4-2

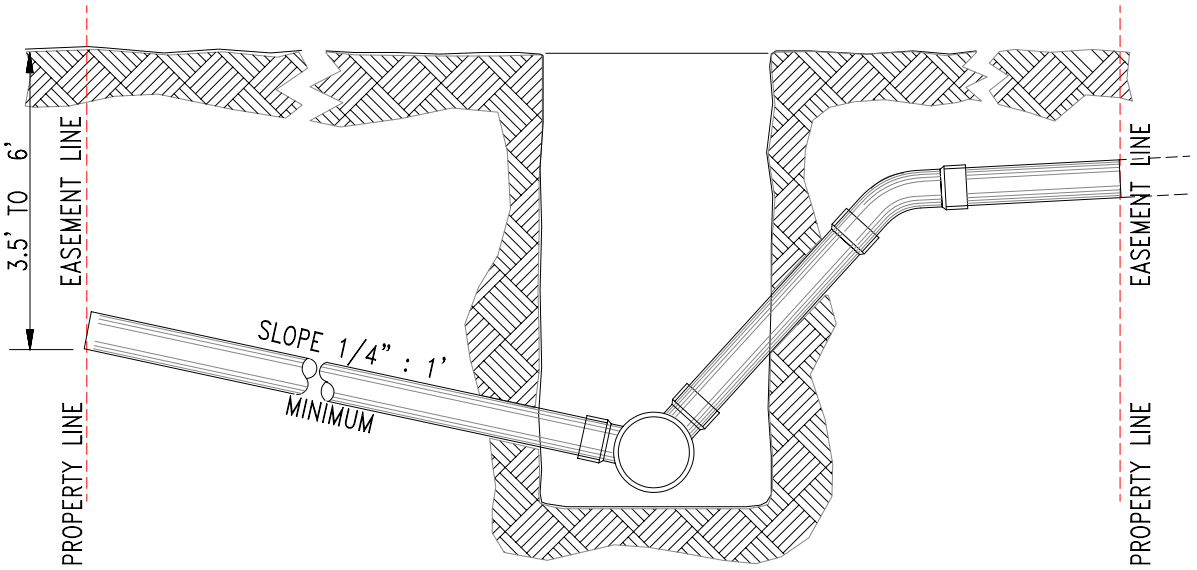

WHEN CONNECTING TO EXISTING LINE
MAIN LINE SHALL BE CORE DRILLED ON TOP
OF PIPE AND CONNECTION SHALL BE MADE
ON TOP OF PIPE WITH A MECHANICAL CONNECTOR
SUCH AS THE INSERT-A-TEE CONNECTOR.
TAP SHALL BE 4" DIA. IF MAIN LINE IS 8" DIA.

WOOD STAKE
TREATED 2X4
PAINTED WHITE
MARKING END OF ALL
HOUSE SERVICES

SEE STD. DWG.
4-19, SURFACE RESTORATION

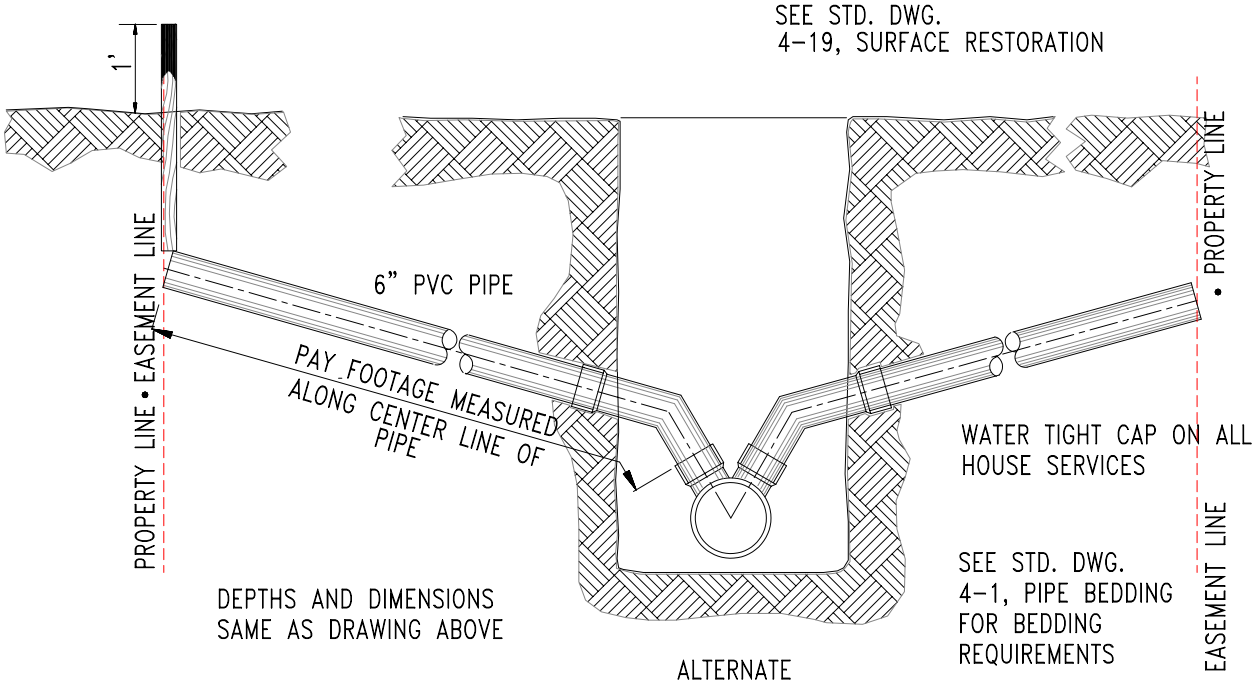

WATER TIGHT CAP ON ALL
HOUSE SERVICES

SEE STD. DWG.
4-1, PIPE BEDDING
FOR BEDDING
REQUIREMENTS

DEPTHS AND DIMENSIONS
SAME AS DRAWING ABOVE

ALTERNATE
INSTALLATION

NO	REVISION	DATE	BY	APPR.

CITY OF SPRINGFIELD
DEPT. OF PUBLIC WORKS

225 FIFTH STREET
SPRINGFIELD, OR. 97477

HOUSE SERVICE CONNECTIONS TO LATERAL

STANDARD DRAWING

4-6

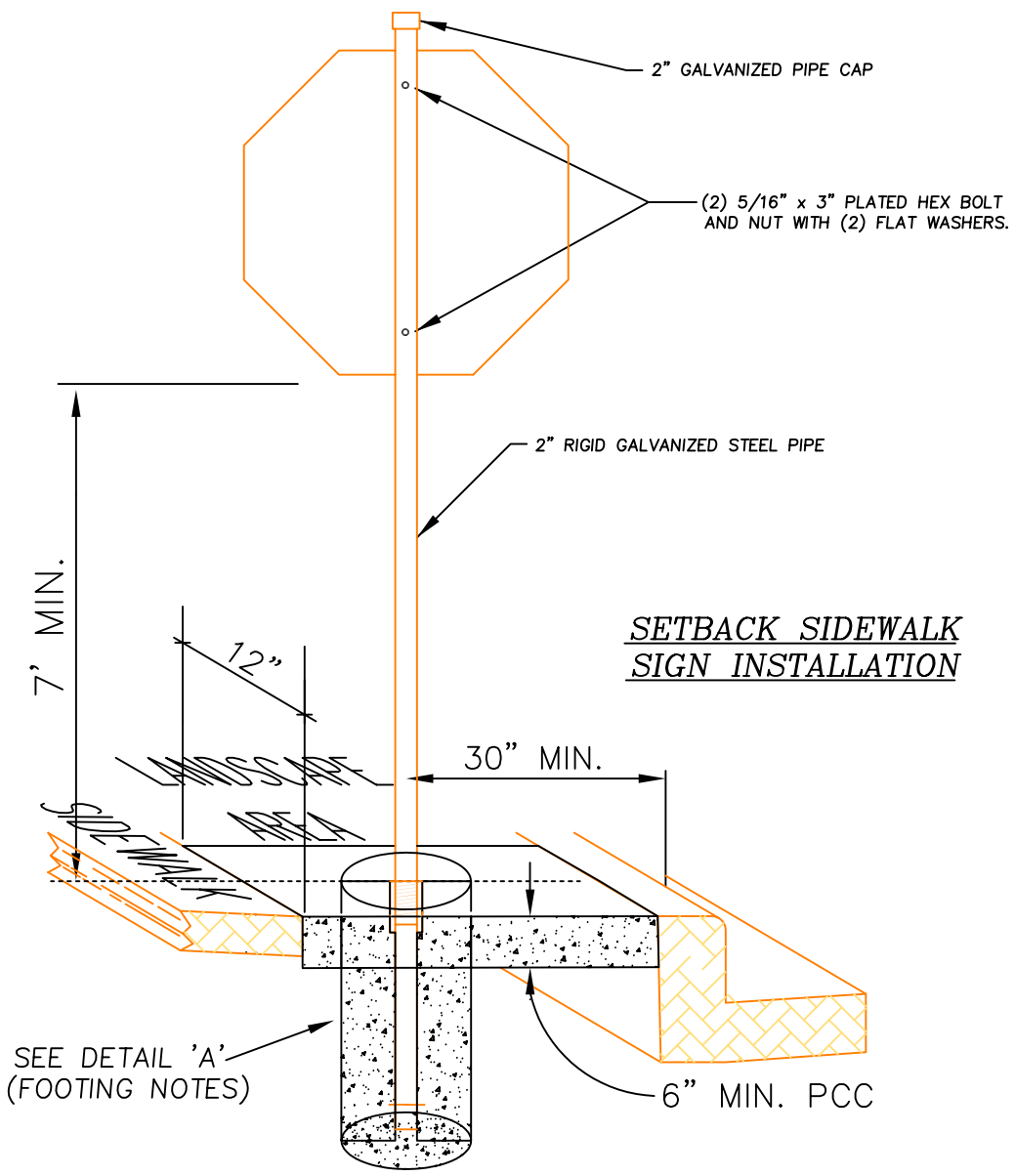

SETBACK SIDEWALK SIGN INSTALLATION

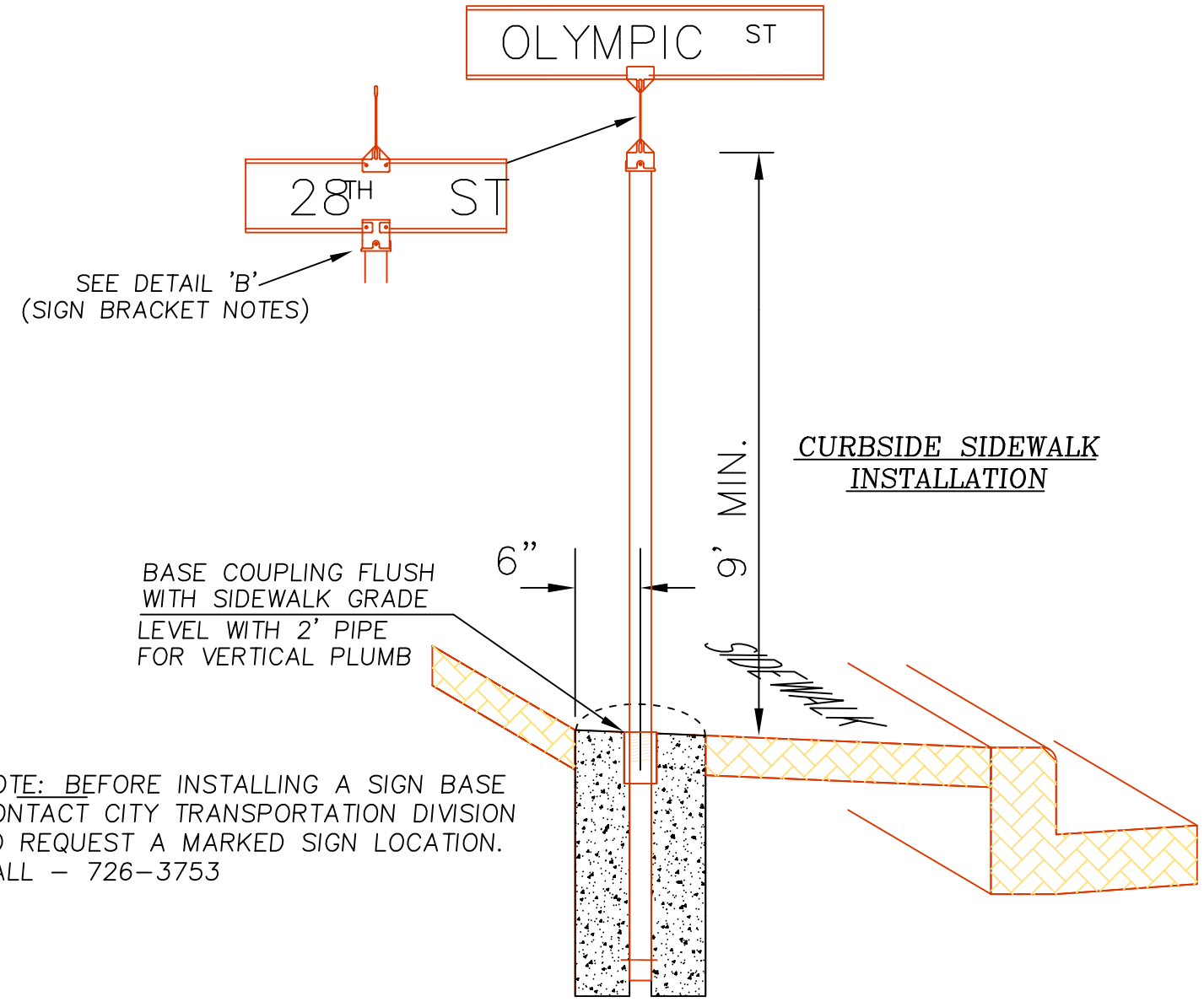

CURBSIDE SIDEWALK INSTALLATION

NOTE: BEFORE INSTALLING A SIGN BASE CONTACT CITY TRANSPORTATION DIVISION TO REQUEST A MARKED SIGN LOCATION. CALL – 726–3753

DETAIL 'A'

FOOTING INSTALLATION NOTES

1. INSTALL 2" RIGID GALVANIZED STEEL PIPE.
2. INSTALL 2" GALVANIZED THREADED STEEL PIPE COUPLING WITH TOP SET AT FINISHED GRADE.
3. INSTALL 2" RIGID GALVANIZED STEEL PIPE TACK WELDED TO COUPLING TO PREVENT TURNING.
4. INSTALL 1/4" X 5" STEEL PIN THROUGH STEEL PIPE
5. INSTALL SIGN BASE ASSEMBLY IN CLASS 3300 PORTLAND CONCRETE USING 2' MIN. GUIDE ROD TO INSURE SIGN POST WILL BE VERTICAL.

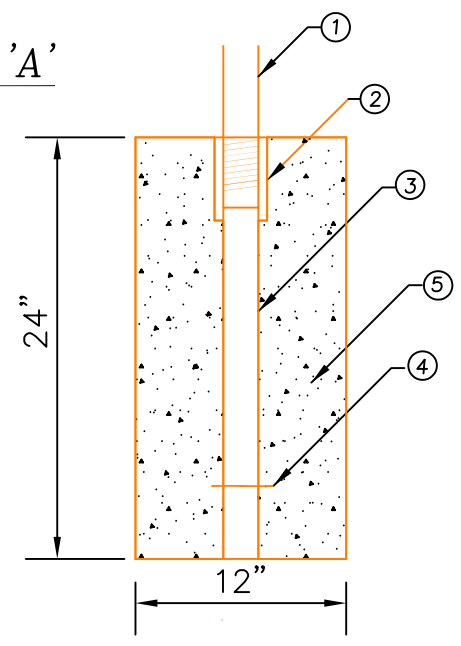

DETAIL 'B'

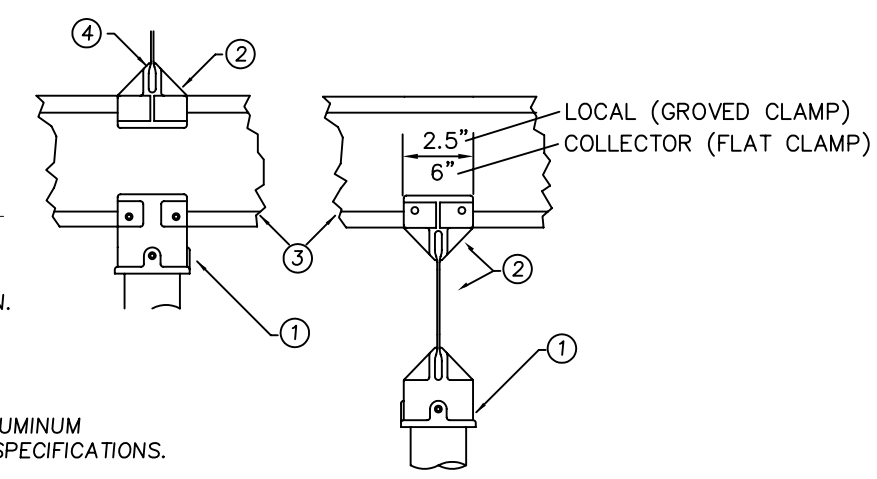

SIGN MOUNTING BRACKET NOTES

1. INSTALL STREET SIGN CAP MOUNT FOR STREET NAME SIGN.
2. INSTALL 90° TOP MOUNT FOR STREET NAME SIGN.
3. INSTALL EXTRUDED or FLAT ALUMINUM STREET NAME SIGN PER CITY SPECIFICATIONS.
4. MOUNTING BRACKETS FOR LOCAL SIGNS SHALL HAVE A GROVED CLAMP TO FIT EXTRUDED SIGNS. MOUNTING BRACKETS FOR COLLECTOR SIGNS SHALL HAVE A FLAT CLAMP TO FIT FLAT SIGNS

NOTE: DRAWING NOT TO SCALE

ALL EYEBOLTS, BOLTS, NUTS, AND WASHERS SHALL BE GALV. STEEL UNLESS NOTED OTHERWISE, ALL SET SCREWS SHALL BE MIN. DIA. 1/4" STAINLESS STEEL WITH SQUARE OR HEX HEADS. ALL SPANWIRE HANGERS AND PLUMBIZERS SHALL BE CAST BRONZE.

NO	REVISION	DATE	BY	APPR.
1	STD. DWG. 5-18	4/94	DRB	
2	SIGN STANDARDS	12/96	DRB	
3	STD. DWG. UPDATE	7/01	D.D.	B.B.

	BY	DATE
DRAWN:	M. ABARCA	5/93
DESIGNED:		
CHECKED:		
APPROVED:		
FILENAME:	TSD5_18	

CITY OF SPRINGFIELD
DEPT. OF PUBLIC WORKS
TRANSPORTATION DIVISION
225 FIFTH STREET
SPRINGFIELD, OR. 97477
(541) 726-3753

SPRINGFIELD TRANSPORTATION DIVISION

ROADSIDE SIGN INSTALLATION DETAIL

STANDARD DRAWING

5–18

Power Cable Trench (Only)

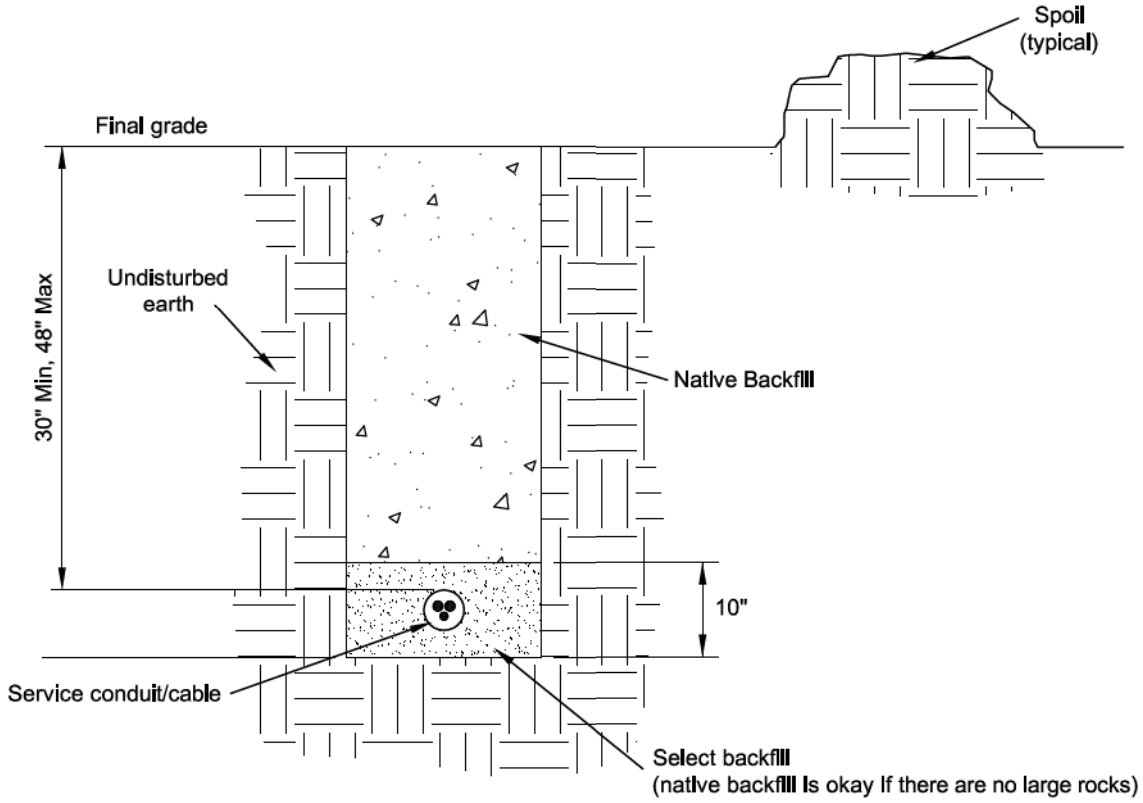

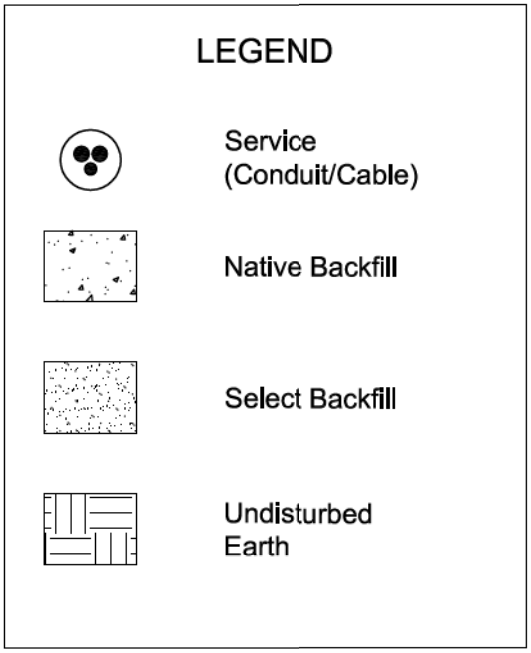

SUB	**SPRINGFIELD UTILITY BOARD** ENGINEERING STANDARD DISTRIBUTION PROCEDURES & POLICIES TRENCHING DETAILS	DATE | DWN | STD | CHK | APP 3/25/2010 | SK | SK | EH | TJ STANDARD NUMBER **ESD 0074** Page 1 of 4

Joint Use Trench

Horizontal Separation

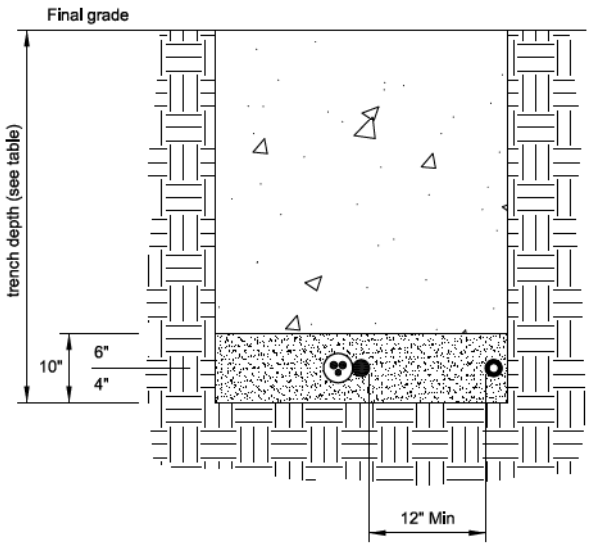

Vertical Separation

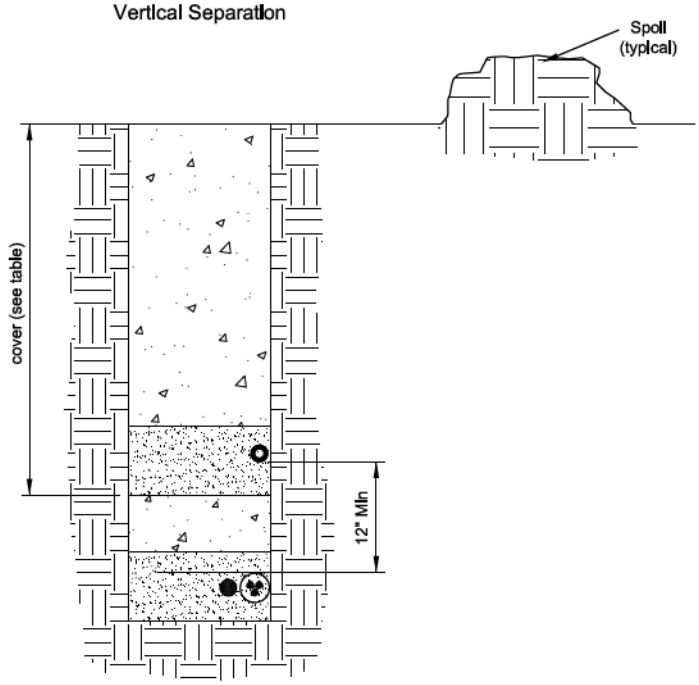

LEGEND

- Other Electric Utilities (Telephone, Cable TV)
- Secondary/Service (Conduit/Cable)
- Primary (Conduit/Cable)
- Native Backfill
- Select Backfill
- Undisturbed Earth

Conduit/ Cable	Minimum Cover	Max. Burial Depth
Primary	36"	48"
Secondary/Service	30"	48"

Street Crossing

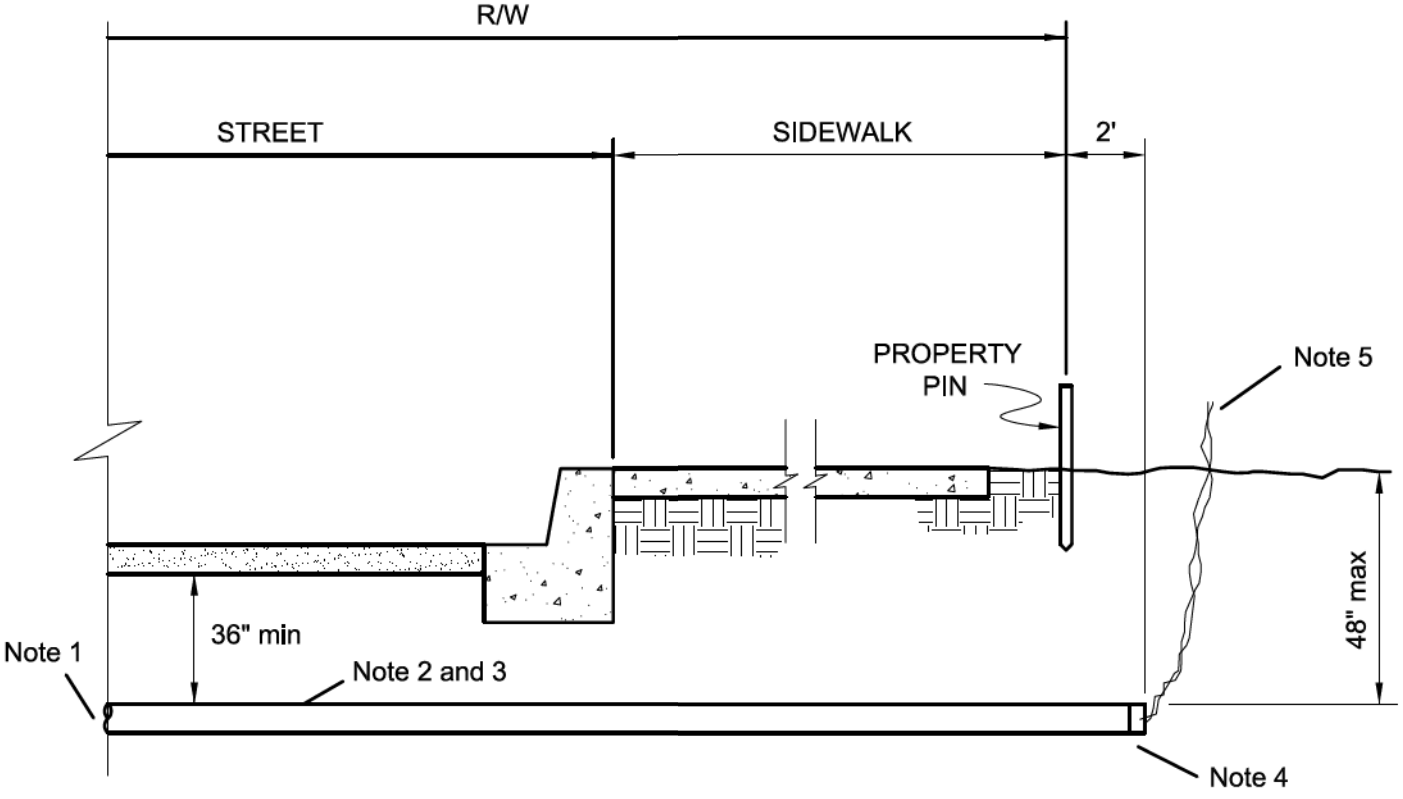

SUB	**SPRINGFIELD UTILITY BOARD** ENGINEERING STANDARD DISTRIBUTION PROCEDURES & POLICIES TRENCHING DETAILS	DATE | DWN | STD | CHK | APP 3/25/2010 | SK | SK | EH | TJ STANDARD NUMBER **ESD 0074** Page 3 of 4

NOTES:

1. All crossings shall be made perpendicular to the road unless otherwise specified.
2. All conduits shall be schedule 40 gray.
3. Conduit sizes will be specified by S.U.B.
4. End of conduit shall be sealed with tape or cap.
5. A marking tape shall be placed around the end of the conduit and brought up at least 1 foot above the ground line, or the end of the conduit shall be marked with scrap conduit or a wood 2"x4" (no stakes).
6. Backfill:
   A. Native backfill containing large rocks, paving materials, cinders, large or sharply angular substance, or corrosive material shall not be placed back into the trench.
   B. For crossings in existing street use CDF backfill. For driveways and when otherwise specified, backfill shall be ¾" minus crushed rock (or approved equivalent) compacted in 6" lifts.

REVISIONS	
Date	Description
10/1/85	Created
9/21/01	Drawing updated
3/25/10	Reformatted

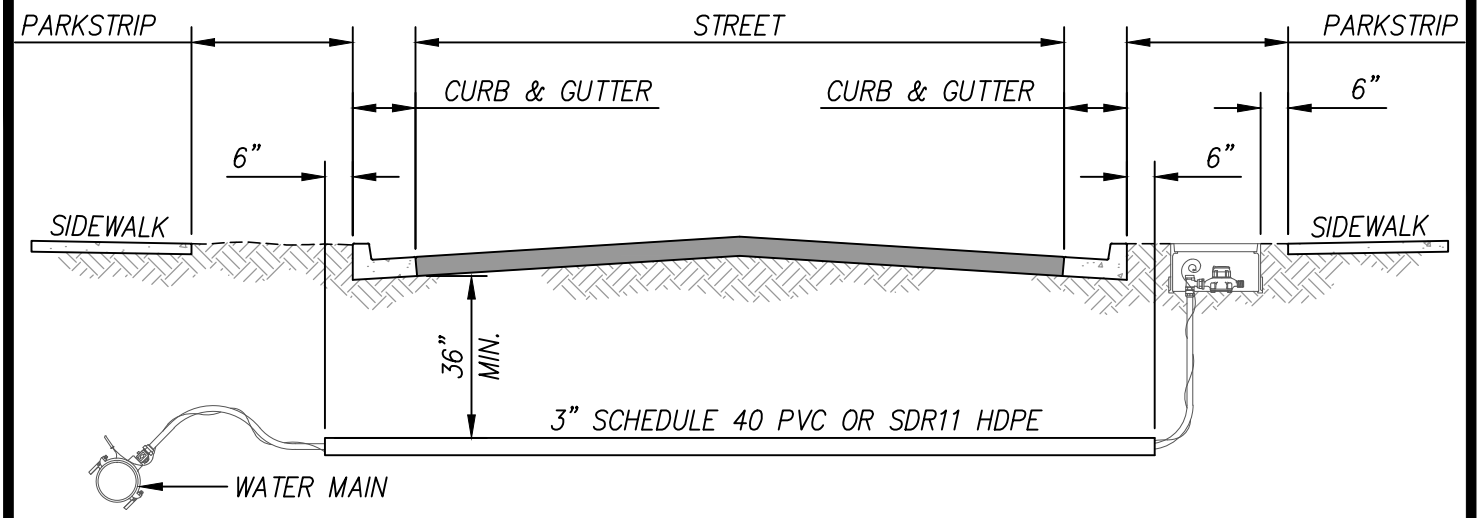

METER BOX IN PARKSTRIP

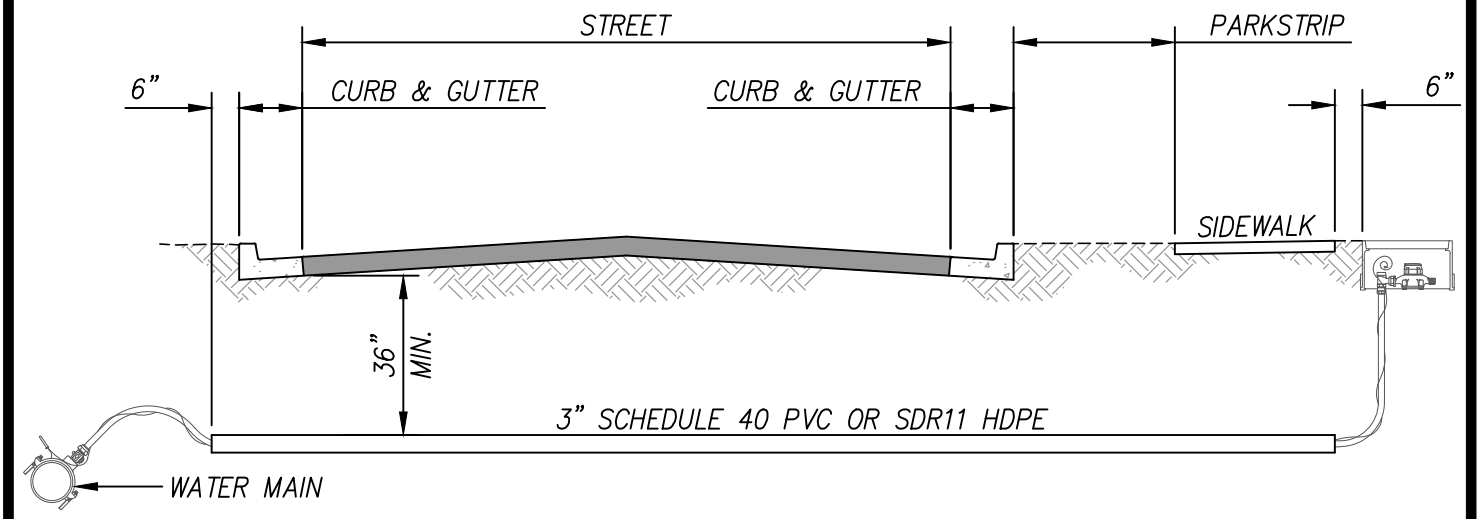

METER BOX BEHIND SIDEWALK (WITH PARKSTRIP)

SEE NOTES ON REVERSE

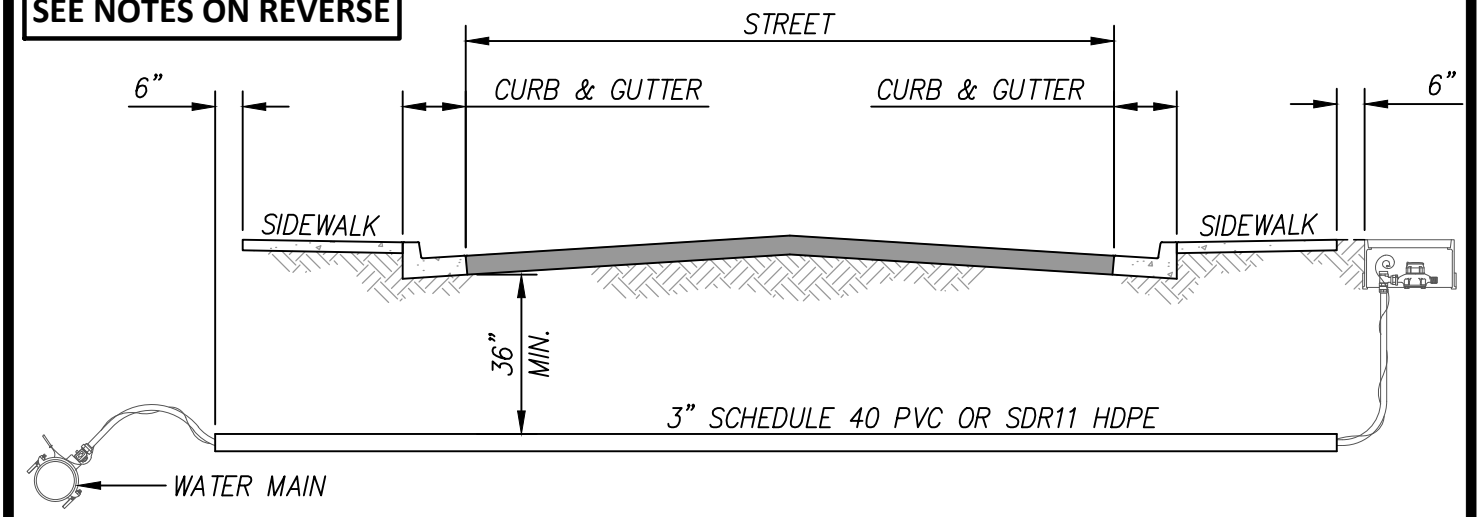

METER BOX BEHIND SIDEWALK (NO PARKSTRIP)

SCALE: N.T.S.	SUB SPRINGFIELD UTILITY BOARD	WATER DIVISION STANDARD DRAWING	DRAWING NUMBER
DRAWN BY: LSB		**METER BOX PLACEMENT**	**W1.00**
CONSTRUCTION:			
ENGINEERING:			REVISED:1–15–2013

NOTE:

THE REFERENCES PROVIDED IN THIS STANDARD ARE FOR INFORMATIONAL PURPOSES ONLY AND MAY NOT BE COMPLETE. IT IS THE CONTRACTORS RESPONSIBILITY TO ENSURE THAT ANY INSTALLATION PERFORMED MEETS THE REQUIREMENTS SET FORTH IN THE STANDARD CONSTRUCTION SPECIFICATIONS AND ANY OTHER APPLICABLE STANDARD.

SUB WATER DEPARTMENT STANDARD CONSTRUCTION SPECIFICATION REFERENCES:

SERVICES: W-401.03.10H & W-401.05.03

NOTES:

1. *3" CONDUIT SHALL NOT BE INSTALLED LOWER THAN THE WATER MAIN.*
2. *3" CONDUIT LENGTHS SHALL BE PER THIS DETAIL, ANY ALTERNATE INSTALLATIONS SHALL BE APPROVED BY SUB WATER ENGINEERING DIVISION PRIOR TO CONSTRUCTION.*

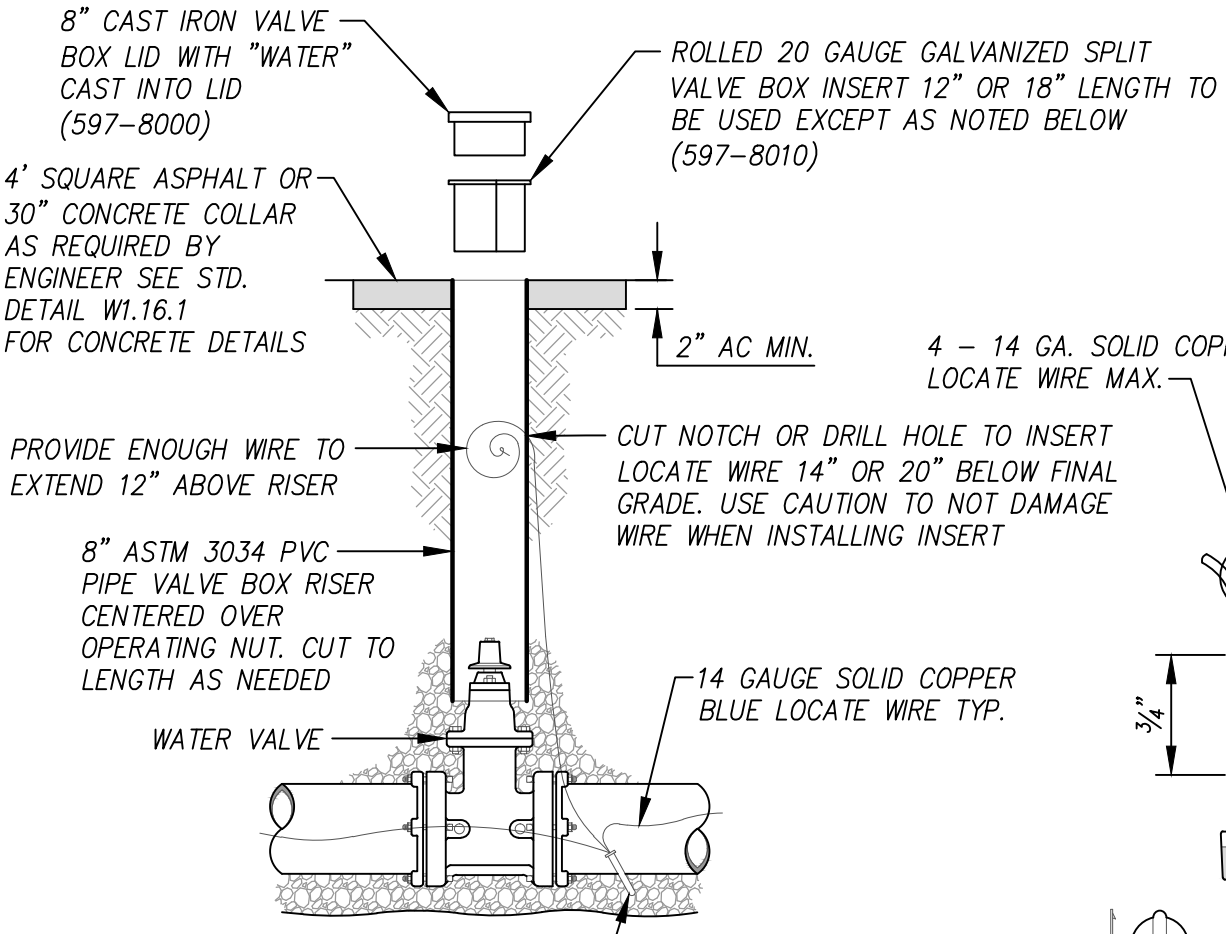

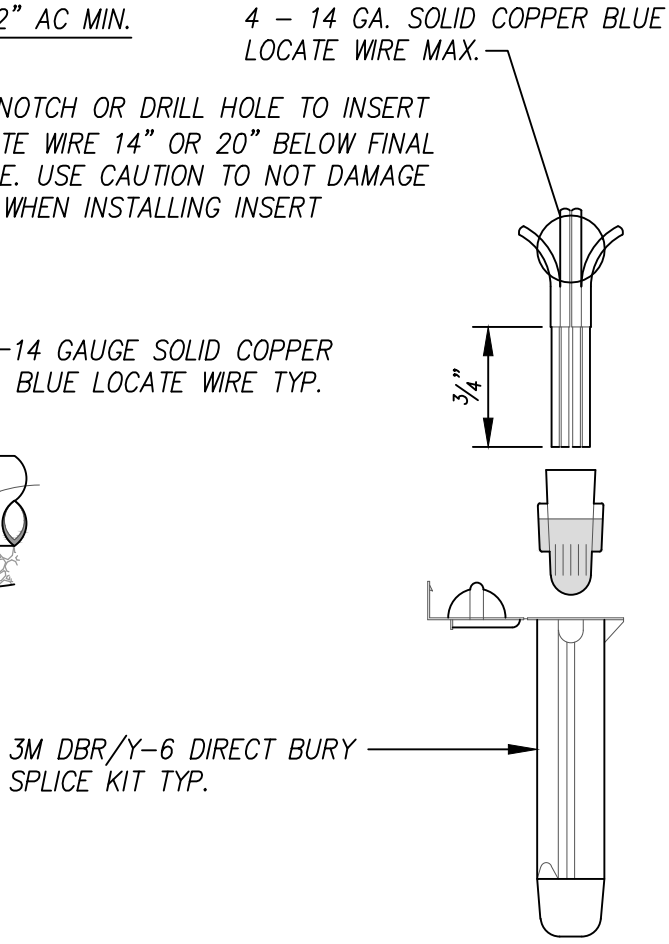

WIRE SPLICE DETAIL

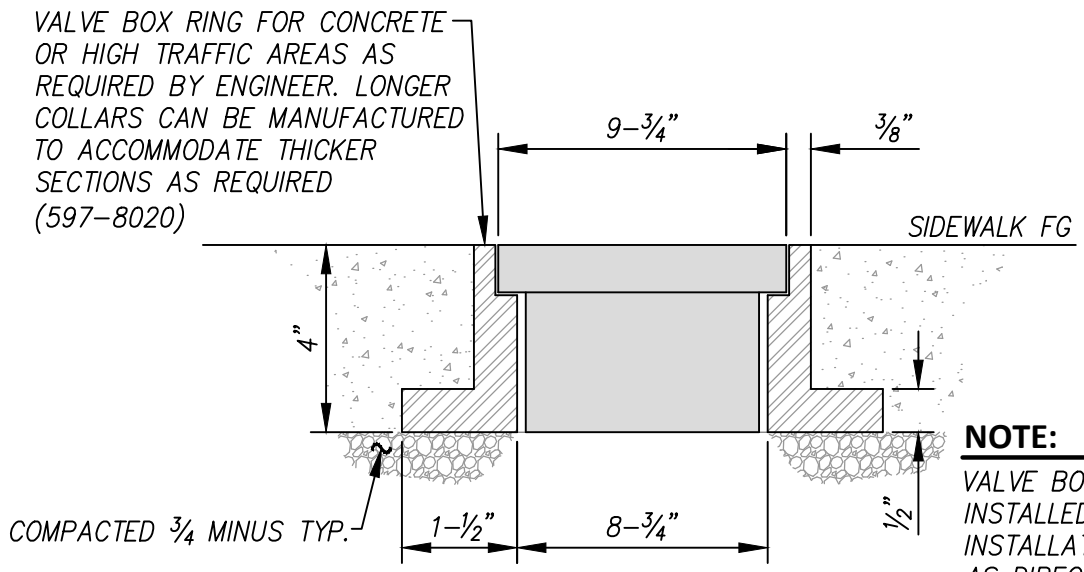

VALVE BOX RING DETAIL

NOTE:

VALVE BOX RINGS SHALL BE INSTALLED FOR ALL VALVE LID INSTALLATIONS IN CONCRETE AND AS DIRECTED BY ENGINEER

SCALE: N.T.S.	SUB SPRINGFIELD UTILITY BOARD	WATER DIVISION STANDARD DRAWING	DRAWING NUMBER
DRAWN BY: LSB		**VALVE TILE INSTALLATION AND WIRE SPLICE DETAIL**	**W1.16**
CONSTRUCTION:			
ENGINEERING:			REVISED: 1-8-2014

NOTE:

THE REFERENCES PROVIDED IN THIS STANDARD ARE FOR INFORMATIONAL PURPOSES ONLY AND MAY NOT BE COMPLETE. IT IS THE CONTRACTORS RESPONSIBILITY TO ENSURE THAT ANY INSTALLATION PERFORMED MEETS THE REQUIREMENTS SET FORTH IN THE STANDARD CONSTRUCTION SPECIFICATIONS AND ANY OTHER APPLICABLE STANDARD.

SUB WATER DEPARTMENT STANDARD CONSTRUCTION SPECIFICATION REFERENCES:

ADJUSTABLE VALVE BOXES: W-401.02.08G

VALVE BOX LIDS: W-401.02.08G1

VALVE BOX RING: W-401.02.08G2

VALVE BOX INSERT: W-401.02.08G3

VALVE BOX RISER: W-401.02.08G4

TRACER WIRE: W-401.03.05A

NOTE:

THE EXTENSION SHALL BE OF SUCH LENGTH THAT ITS OPERATING NUT WHEN INSTALLED IS WITHIN 1 TO 2 FEET OF FINISHED GRADE

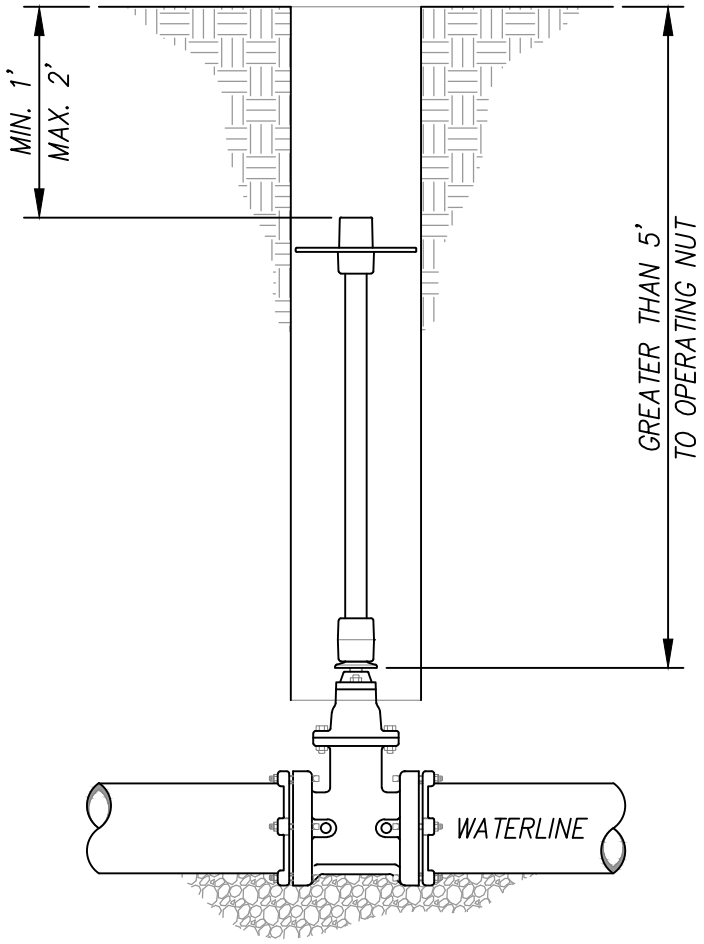

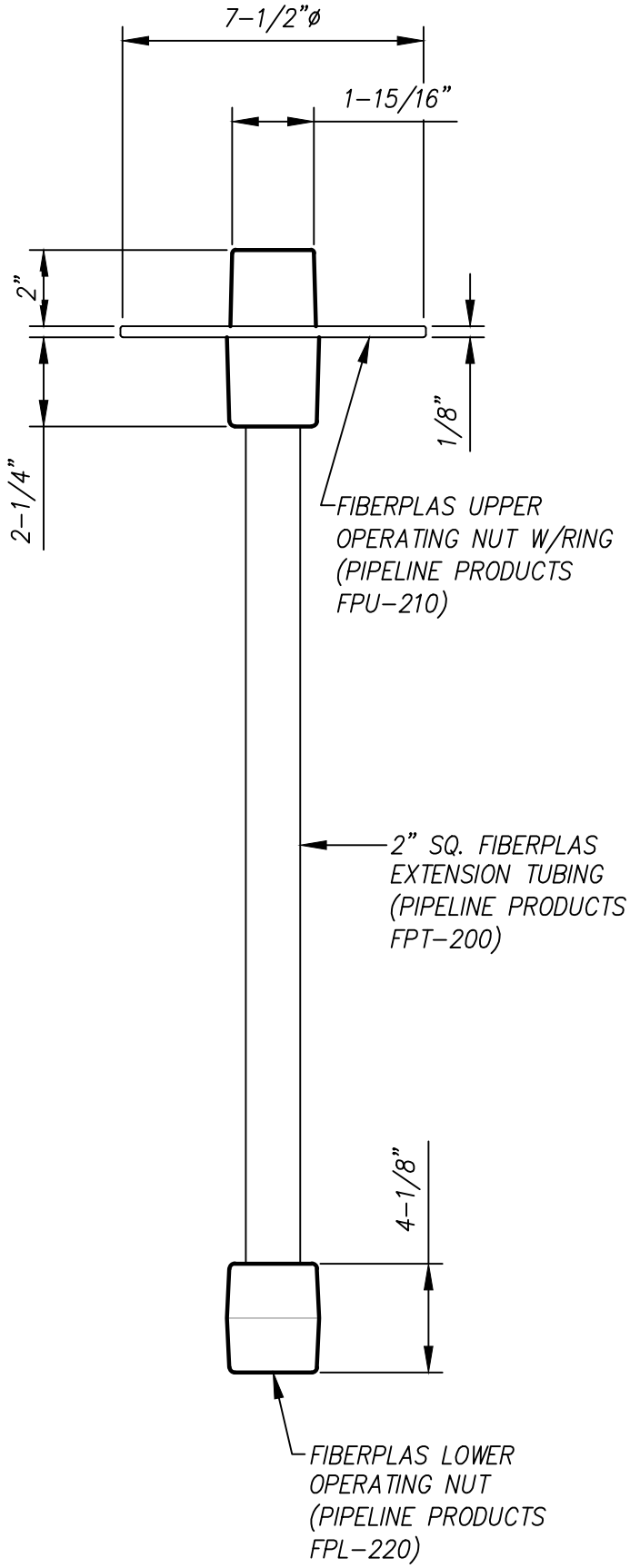

SCALE: N.T.S.	SPRINGFIELD UTILITY BOARD	WATER DIVISION STANDARD DRAWING	DRAWING NUMBER
DRAWN BY: LSB		**VALVE OPERATING NUT EXTENSION**	**W1.18**
CONSTRUCTION:			REVISED:1-15-2013
ENGINEERING:			

NOTE:

THE REFERENCES PROVIDED IN THIS STANDARD ARE FOR INFORMATIONAL PURPOSES ONLY AND MAY NOT BE COMPLETE. IT IS THE CONTRACTORS RESPONSIBILITY TO ENSURE THAT ANY INSTALLATION PERFORMED MEETS THE REQUIREMENTS SET FORTH IN THE STANDARD CONSTRUCTION SPECIFICATIONS AND ANY OTHER APPLICABLE STANDARD.

SUB WATER DEPARTMENT STANDARD CONSTRUCTION SPECIFICATION REFERENCES:

VALVE OPERATOR EXTENSIONS: *W-401.02.08F*

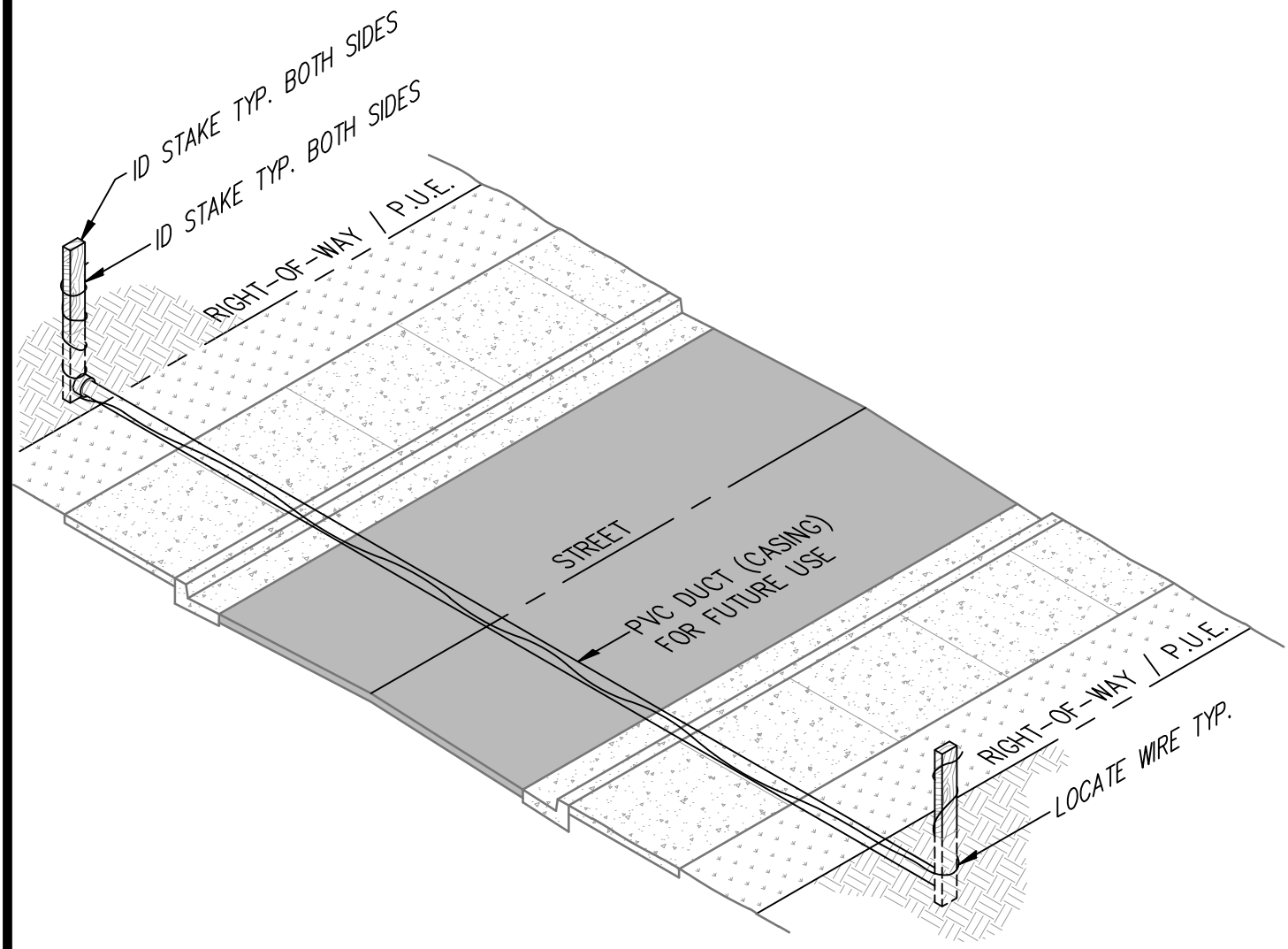

NOTES:

1. ID STAKE MINIMUM 2"x4" BURIED VERTICALLY IN GROUND AT DUCT END WITH RED TAPE.
2. ID STAKE REQUIRED AT EACH END OF CASING SPECIFYING NUMBER, SIZE, AND UTILITY.
3. END CAPS FOR CASING ARE REQUIRED AT EACH END.
4. LOCATE WIRE IS REQUIRED TO BE RUN WITH CASING AS WELL AS WRAPPED AROUND THE LOCATE STAKE.

SCALE: N.T.S.	SPRINGFIELD UTILITY BOARD	WATER DIVISION STANDARD DRAWING	DRAWING NUMBER
DRAWN BY: LSB		**SPARE CASING DETAIL**	**W1.27**
CONSTRUCTION:			REVISED:1-15-2013
ENGINEERING:			

NOTE:

THE REFERENCES PROVIDED BELOW ARE FOR INFORMATIONAL PURPOSES ONLY AND MAY NOT BE COMPLETE. IT IS THE CONTRACTORS RESPONSIBILITY TO ENSURE THAT ANY INSTALLATION PERFORMED MEETS THE REQUIREMENTS SET FORTH IN THE STANDARD CONSTRUCTION SPECIFICATIONS.

SUB WATER DEPARTMENT STANDARD CONSTRUCTION SPECIFICATION REFERENCES:

TRENCHING AND BACKFILL: *DIVISION W-300*

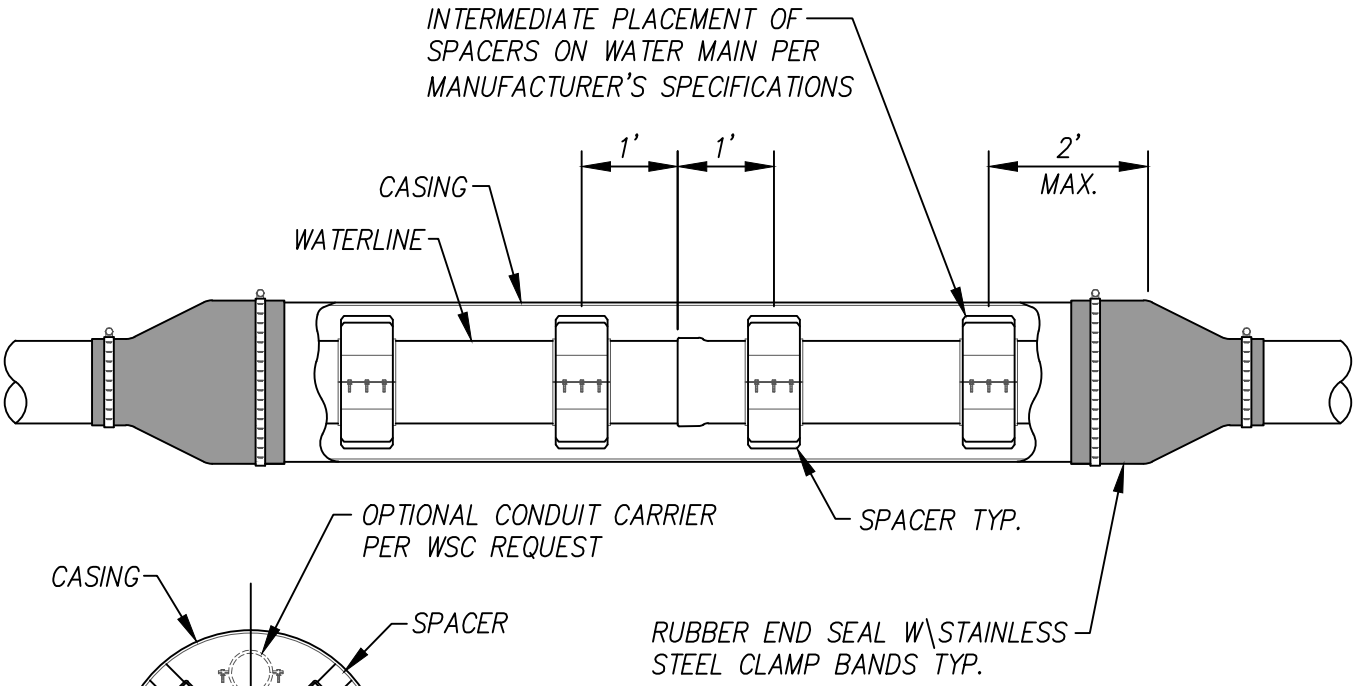

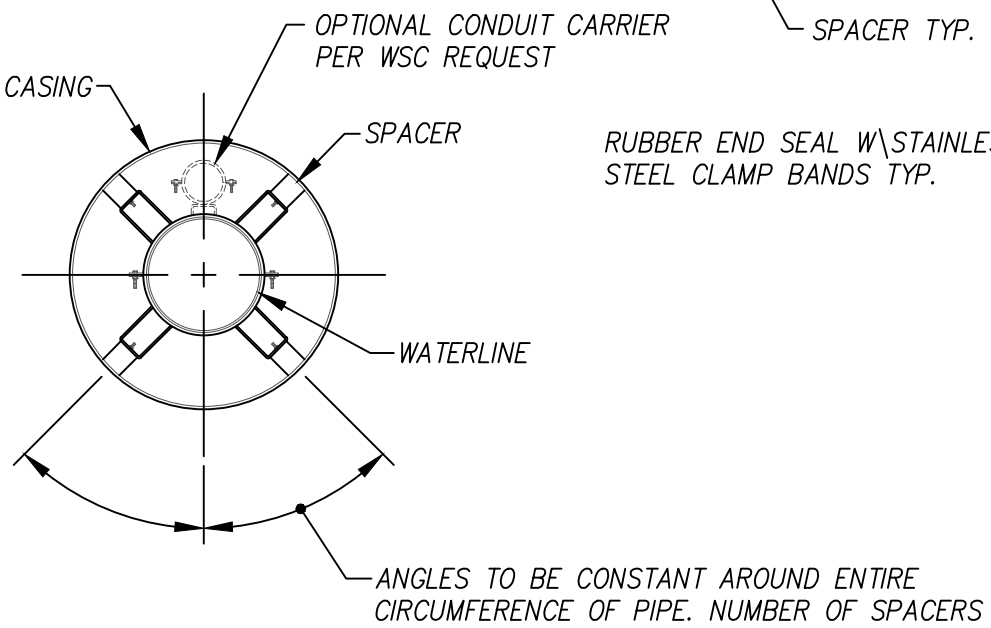

CROSS SECTION

NOTES:

1. CASING MATERIAL, SIZE, AND ADDITIONAL CARRIERS SHALL BE AT THE SOLE DISCRETION OF SPRINGFIELD UTILITY BOARD.

2. CASING SHALL BE INSTALLED SYMMETRICAL ABOUT WATER MAIN CENTERLINE (TYP.). PIPE CASING SHALL BE LAID TRUE TO LINE AND GRADE WITH NO BENDS OR CHANGES IN GRADE FOR THE FULL LENGTH OF THE CASING.

3. SPRINGFIELD UTILITY BOARD APPROVED CASING SPACERS AND END SEALS SHALL BE INSTALLED PER MANUFACTURER'S SPECIFICATIONS.

4. ALL PIPE JOINTS WITHIN THE CASING ARE TO BE RESTRAINED.

5. A MINIMUM OF THREE SPACERS IS REQUIRED PER FULL JOINT OF PIPE.

SCALE: N.T.S.	SUB SPRINGFIELD UTILITY BOARD	WATER DIVISION STANDARD DRAWING	DRAWING NUMBER
DRAWN BY: LSB		**CASING INSTALLATION**	**W1.30**
CONSTRUCTION:			REVISED:1–15–2013
ENGINEERING:			

NOTE:

THE REFERENCES PROVIDED IN THIS STANDARD ARE FOR INFORMATIONAL PURPOSES ONLY AND MAY NOT BE COMPLETE. IT IS THE CONTRACTORS RESPONSIBILITY TO ENSURE THAT ANY INSTALLATION PERFORMED MEETS THE REQUIREMENTS SET FORTH IN THE STANDARD CONSTRUCTION SPECIFICATIONS AND ANY OTHER APPLICABLE STANDARD.

SUB WATER DEPARTMENT STANDARD CONSTRUCTION SPECIFICATION REFERENCES:

SMOOTH STEEL CASING: *W-302.03.10*

CASED OR TUNNELED PIPE: *W-302.03.12*

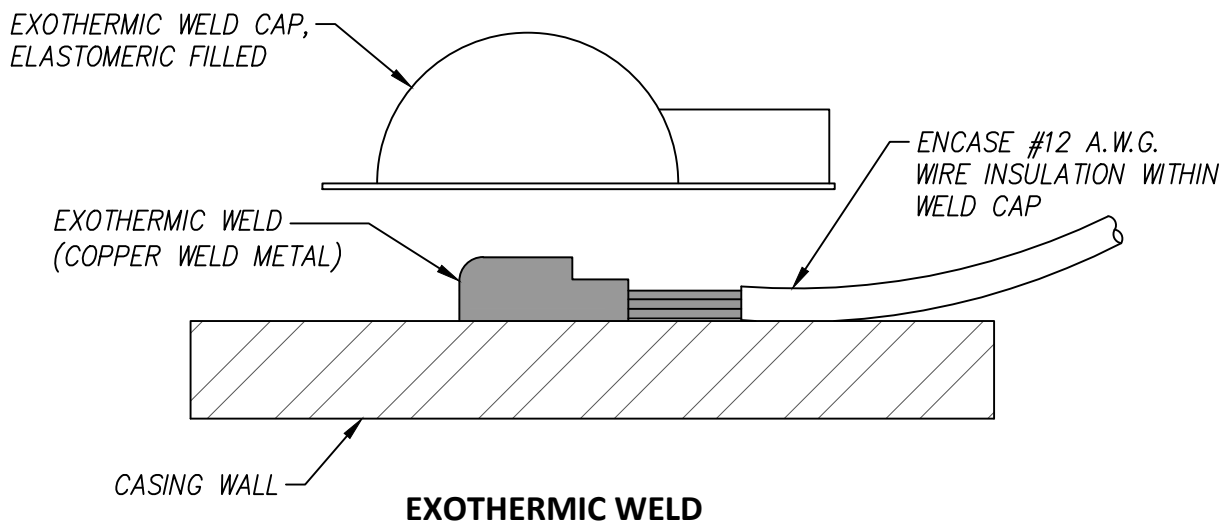

EXOTHERMIC WELD DETAIL

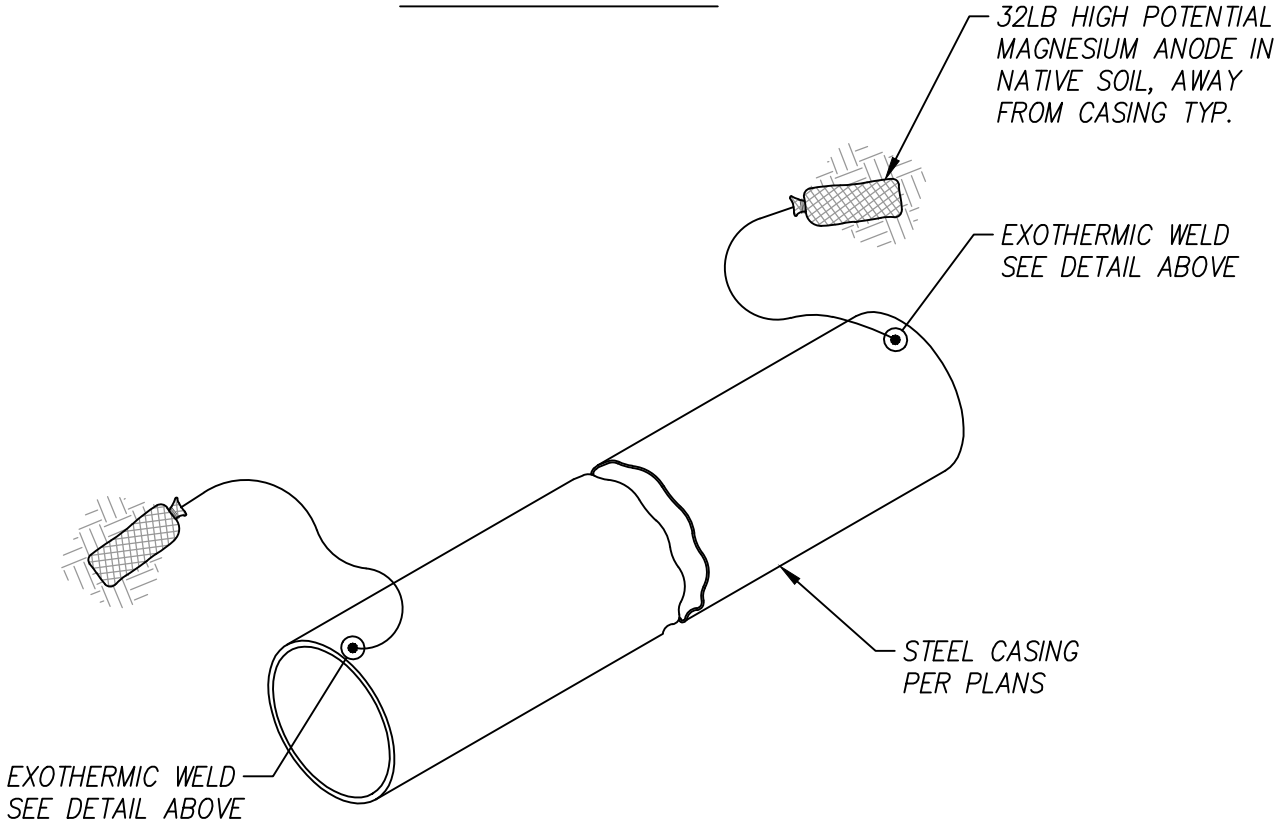

NOTES:

1. GRIND CASING TO BRIGHT METAL PRIOR TO EXOTHERMIC WELDING.
2. APPLY WELD CAP DIRECTLY TO CASING. USE PRIMER AS REQUIRED BY MFR. COMPLETELY ENCIRCLE WIRE WITHIN ELASTOMER.

SCALE: N.T.S.	SPRINGFIELD UTILITY BOARD	WATER DIVISION STANDARD DRAWING	DRAWING NUMBER
DRAWN BY: LSB		CATHODIC PROTECTION	W1.31M
CONSTRUCTION:			
ENGINEERING:			REVISED: 3-25-2014

NOTE:

THE REFERENCES PROVIDED IN THIS STANDARD ARE FOR INFORMATIONAL PURPOSES ONLY AND MAY NOT BE COMPLETE. IT IS THE CONTRACTORS RESPONSIBILITY TO ENSURE THAT ANY INSTALLATION PERFORMED MEETS THE REQUIREMENTS SET FORTH IN THE STANDARD CONSTRUCTION SPECIFICATIONS AND ANY OTHER APPLICABLE STANDARD.

SUB WATER DEPARTMENT STANDARD CONSTRUCTION SPECIFICATION REFERENCES:

SMOOTH STEEL CASING: *W-302.03.10*

CASED OR TUNNELED PIPE: *W-302.03.12*

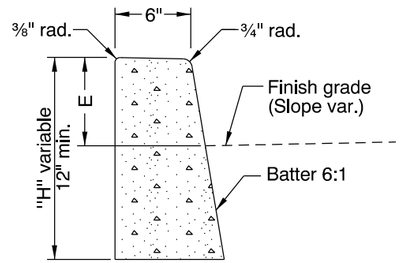

O.D.O.T. & City of Portland Standard "H"=16"

STANDARD CURB

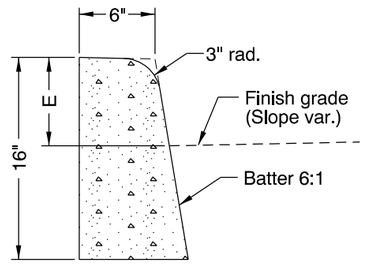

MOUNTABLE CURB

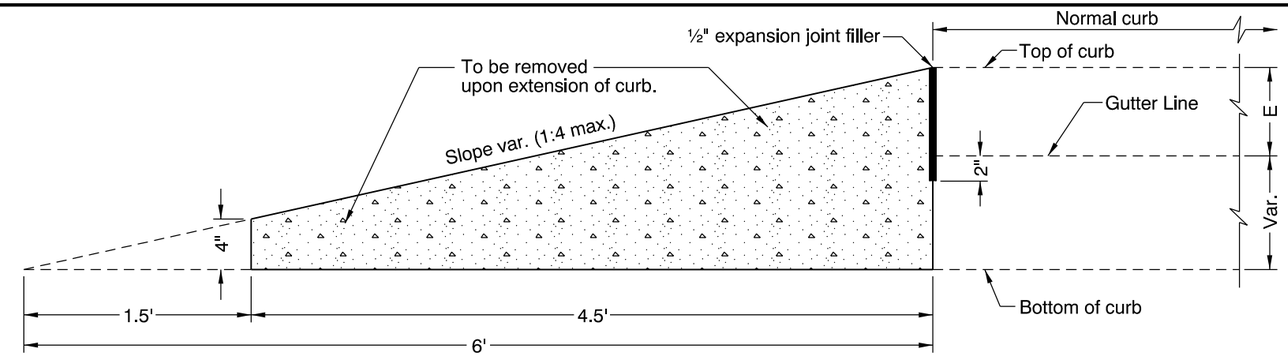

CURB ENDING DETAIL

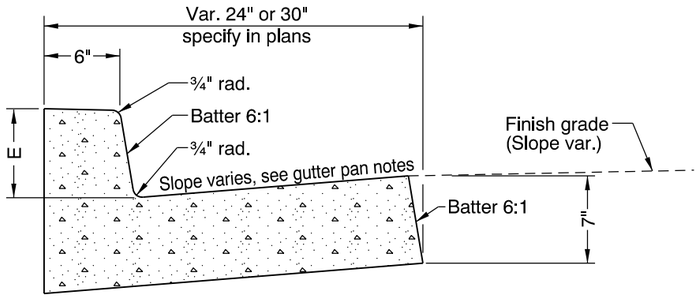

CURB AND GUTTER

GUTTER PAN NOTES:
Slope 8% normal.
Use 5% slope for gutter width greater than 24".
Slope 4% at ramps. Vary slope as reqd. for drainage.
Vary where shown on plans, and allowed by jurisdiction.

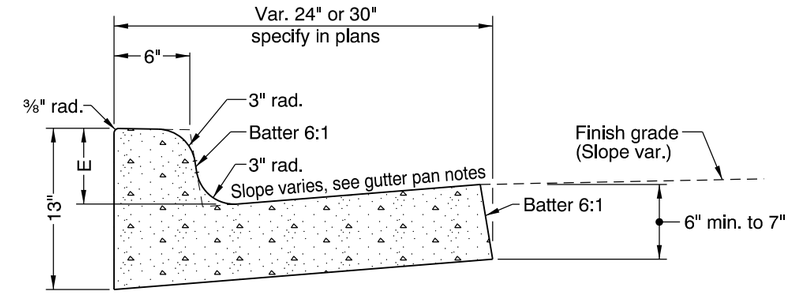

MOUNTABLE CURB AND GUTTER

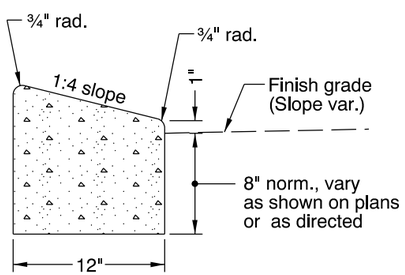

LOW PROFILE
MOUNTABLE CURB

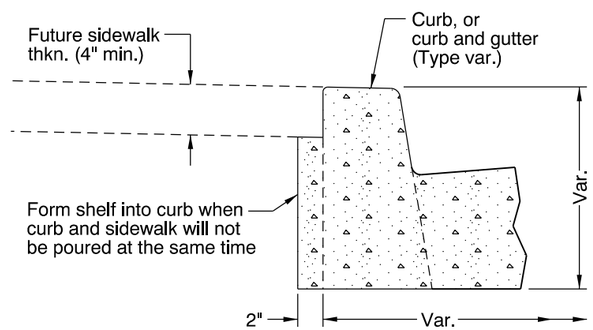

MODIFICATION FOR KEYWAY
(Where shown on plans)

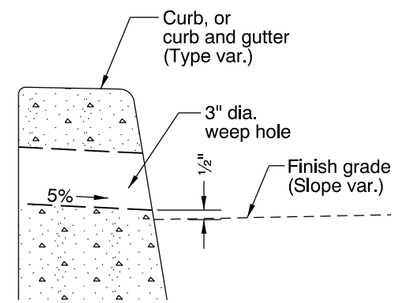

WEEP HOLE DETAIL
(Where shown on plans, and allowed by jurisdiction)

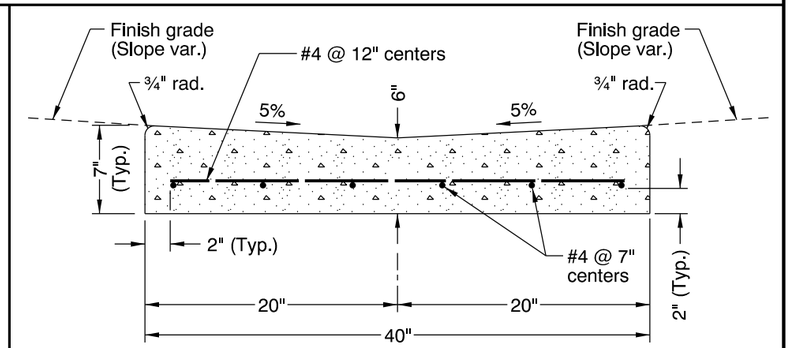

VALLEY GUTTER

CALC. BOOK NO. N/A

BASELINE REPORT DATE 07-JAN-2013

GENERAL NOTES FOR ALL DETAILS:

1. Curb exposure "E" = 6" to 9", as measured vertically from flowline to highest point on curb. Vary as shown on plans or as directed. O.D.O.T standard "E"=7".
2. Const. expansion joints at 200' maximum spacing, and at points of tangency, and at ends of each driveways.
3. Const. contraction joints at 15' maximum spacing, and at ends of each inlet and ramp.
4. Transitions shall be used to connect curbs of different exposures "E". ("E" Is the total vertical dimension of those curb surfaces having a slope of 1:1 or steeper). Minimum desirable transition length shall be 20' for each 1" difference in "E".
5. Tops of all curbs shall slope toward the roadway at 2% normal, unless otherwise shown, or as directed.
6. Dimensions are nominal, vary to conform with curb machine approved by the engineer.
7. Dimensions adjacent to radii are measured to the point of intersection of curb surfaces.
8. For sidewalk details, and monolithic curb & sidewalk, see Std. Drg. RD720.
9. For drainage curbs, see Std. Drg. RD701.

The selection and use of this Standard Drawing, while designed in accordance with generally accepted engineering principles and practices, is the sole responsibility of the user and should not be used without consulting a Registered Professional Engineer.

NOTE: All material and workmanship shall be in accordance with the current Oregon Standard Specifications

OREGON STANDARD DRAWINGS

CURBS

2008

DATE	REVISION DESCRIPTION
07-2009	REVISED DETAILS & NOTES
01-2013	REVISED DETAILS & NOTES

rd700.dgn 29-JAN-2013

RD700

Effective Date: December 1, 2013 - May 31, 2014

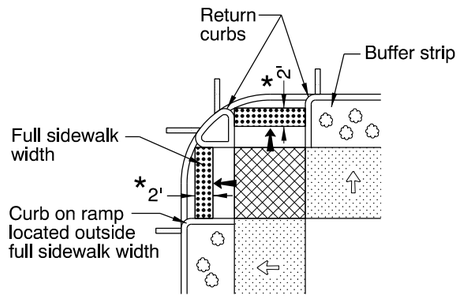

OPTION A
PERPENDICULAR RAMP WITH LANDSCAPED BUFFER STRIP

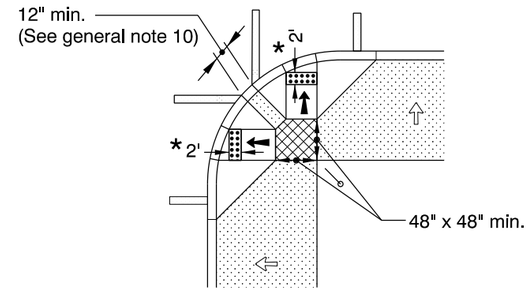

OPTION B
PERPENDICULAR RAMP (FOR WIDE SIDEWALKS)

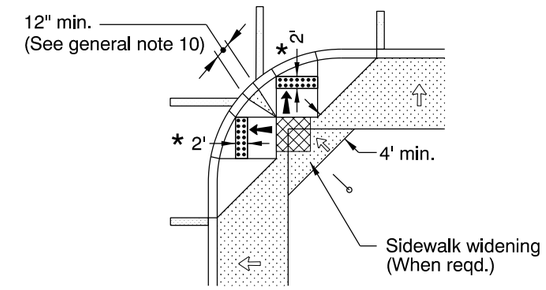

OPTION C
PERPENDICULAR RAMP (FOR NARROW SIDEWALKS)

Marked or intended crossing location

Slope 2% max.

Slope 8.33% (1":12") max.
(Ramp length 15' max.)

Truncated dome detectable warning surface

Turning space (Minimum level area 48" x 48")
For the purposes of this application,
a 2% maximum slope (For drainage) is considered level

*2' See general note 5

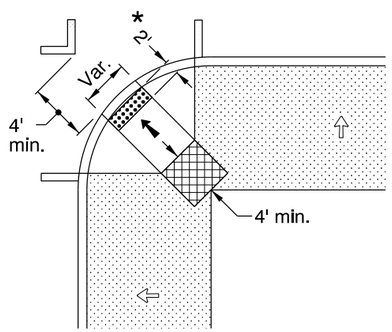

OPTION D
DIAGONAL RAMP (FOR WIDE SIDEWALKS)
Use in alterations only and when site constraints prohibit installing two ramps

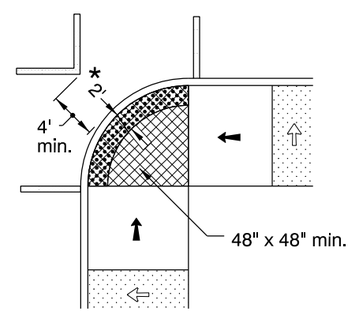

OPTION E
DIAGONAL-PARALLEL RAMP (FOR SIDEWALK WIDTHS ≥ RADIUS)
Use in alterations only and when site constraints prohibit installing two ramps

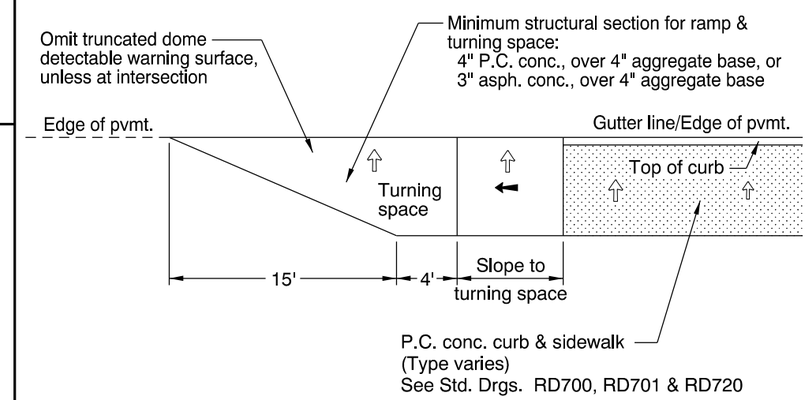

OPTION F
SIDEWALK RAMP AND TURNING SPACE (FOR ENDS OF SIDEWALKS)

GENERAL NOTES FOR ALL DETAILS:

1. Sidewalk ramp details are based on United States Access Board Standards.
2. See Std. Drgs. RD700 & RD701 for curbs. See Std. Drg. RD720 for sidewalks. See Std. Drgs. TM503 & TM530 for crosswalk markings, widths, etc. See Std. Drg. RD755 for sidewalk ramp details.
3. Tooled joints are required at all sidewalk ramp slope break lines.
4. Sidewalk curb ramp slopes shown are relative to the true level horizon (Zero bubble).
5. Place truncated dome detectable warning surface in the lower 2' adjacent to traffic of throat of ramp only. For details not shown, see Std. Drg. RD759.
6. Side flares that are not part of the path of travel may be any slope. Check the gutter flow depth to assure that the design flood does not overtop the back of sidewalk. If overtopping occurs place an inlet at upstream side or perform other approved design mitigation.
7. Sidewalk flare is not necessary where the ramp is protected from pedestrian cross-travel.
8. For the purpose of this drawing, a curb ramp is considered "perpendicular" if the angle between the longitudinal axis of the ramp and a line tangent to the curb at the ramp center is 75° or greater.
9. Ramps for paths intersecting a roadway should be full width of path, excluding flares. When a ramp is used to provide bicycle access from a roadway to a sidewalk, the ramp should be 8' wide.
10. When 2 curb ramps are immediately adjacent as in Options B & C, the curb exposure (e) between the adjacent side flares may range between 3" and full design exposure.
11. Only use options allowed by jurisdiction.

CALC. BOOK NO. N/A

BASELINE REPORT DATE 08-JUL-2013

NOTE: All material and workmanship shall be in accordance with the current Oregon Standard Specifications

The selection and use of this Standard Drawing, while designed in accordance with generally accepted engineering principles and practices, is the sole responsibility of the user and should not be used without consulting a Registered Professional Engineer.

OREGON STANDARD DRAWINGS

SIDEWALK RAMP PLACEMENT OPTIONS
CURB RADII ≤ 15'

2008

DATE	REVISION DESCRIPTION
06-2009	REVISED & ADDED NOTES
07-2010	REVISED DETAILS & NOTES
01-2013	REVISED NOTES
07-2013	REVISED NOTES

08-JUL-2013 rd756.dgn

RD756

Effective Date: June 1, 2014 - November 30, 2014

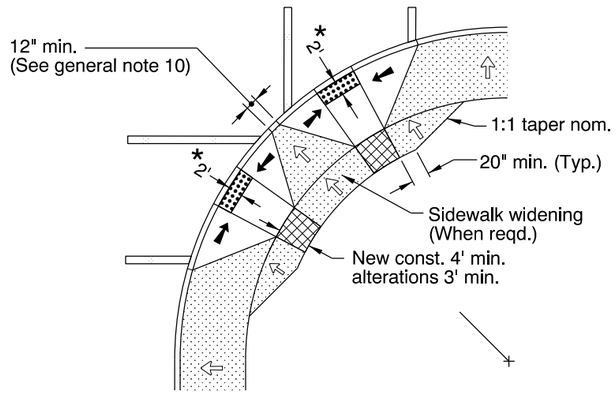

OPTION G
PERPENDICULAR RAMPS (FOR NARROW SIDEWALKS)

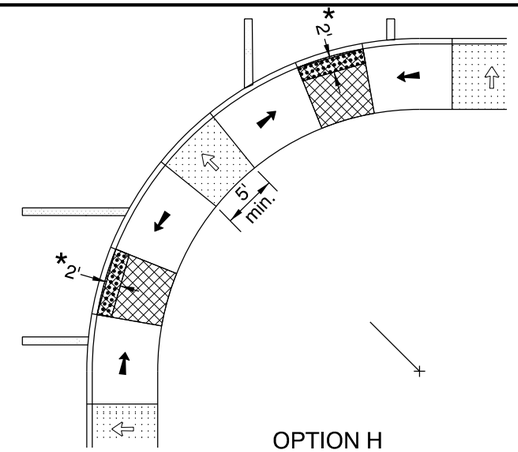

OPTION H
PARALLEL RAMPS (FOR NARROW SIDEWALKS)

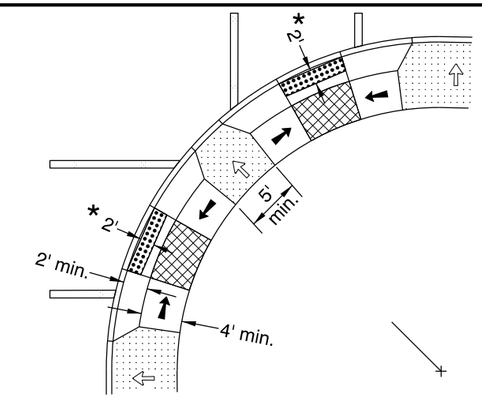

OPTION I
COMBINATION RAMPS (FOR WIDE SIDEWALKS)

	Marked or intended crossing location	*2'	See general note 5
⇦	Slope 2% max.		Truncated dome detectable warning surface
◄	Slope 8.33% (1":12") max. (Ramp length 15' max.)		Turning space (Min. level area 48" x 48") For the purposes of this application, a 2% maximum slope (For drainage) is considered level

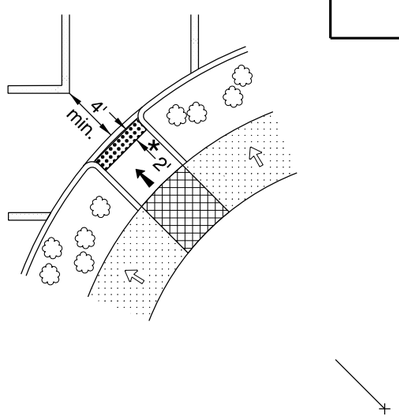

OPTION J
DIAGONAL RAMP WITH LANDSCAPED BUFFER STRIP
Use in alterations only and when site constraints prohibit installing two ramps

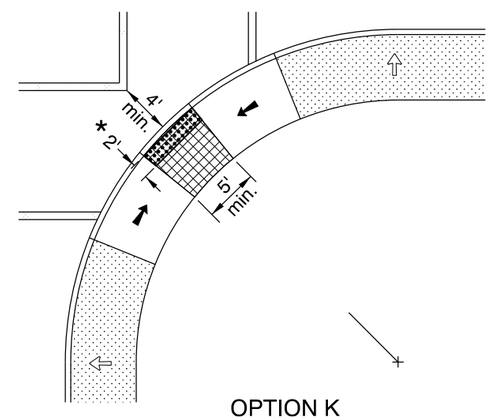

OPTION K
DIAGONAL-PARALLEL RAMP (FOR NARROW SIDEWALKS)
Use in alterations only and when site constraints prohibit installing two ramps

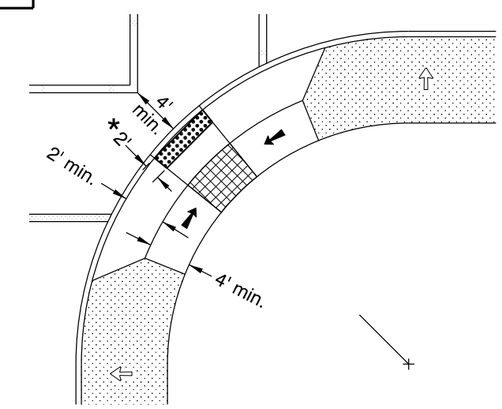

OPTION L
DIAGONAL-COMBINATION RAMP (FOR WIDE SIDEWALKS)
Use in alterations only and when site constraints prohibit installing two ramps

GENERAL NOTES FOR ALL DETAILS:

1. Sidewalk ramp details are based on United States Access Board Standards.
2. See Std. Drgs. RD700 & RD701 for curbs. See Std. Drg. RD720 for sidewalks. See Std. Drgs. TM503 & TM530 for crosswalk markings, widths, etc. See Std. Drg. RD755 for sidewalk ramp details.
3. Tooled joints are required at all sidewalk ramp slope break lines.
4. Sidewalk curb ramp slopes shown are relative to the true level horizon (Zero bubble).
5. Place truncated dome detectable warning surface in the lower 2' adjacent to traffic of throat of ramp only. For details not shown, see Std. Drg. RD759.
6. Side flares that are not part of the path of travel may be any slope. Check the gutter flow depth to assure that the design flood does not overtop the back of sidewalk. If overtopping occurs place an inlet at upstream side or perform other approved design mitigation.
7. Sidewalk flare is not necessary where the ramp is protected from pedestrian cross-travel.
8. For the purpose of this drawing, a curb ramp is considered "perpendicular" if the angle between the longitudinal axis of the ramp and a line tangent to the curb at the ramp center is 75° or greater.
9. Ramps for paths intersecting a roadway should be full width of path, excluding flares. When a ramp is used to provide bicycle access from a roadway to a sidewalk, the ramp should be 8' wide.
10. When 2 curb ramps are immediately adjacent as in Option G, the curb exposure (e) between the adjacent side flares may range between 3" and full design exposure.
11. Only use options allowed by jurisdiction.

CALC. BOOK NO. N/A

BASELINE REPORT DATE 08-JUL-2013

NOTE: All material and workmanship shall be in accordance with the current Oregon Standard Specifications

The selection and use of this Standard Drawing, while designed in accordance with generally accepted engineering principles and practices, is the sole responsibility of the user and should not be used without consulting a Registered Professional Engineer.

OREGON STANDARD DRAWINGS

SIDEWALK RAMP PLACEMENT OPTIONS
CURB RADII > 15'

2008

DATE	REVISION DESCRIPTION
06-2009	REVISED DETAILS & NOTES
07-2010	REVISED DETAILS & NOTES
01-2013	REVISED NOTE
07-2013	REVISED NOTES

08-JUL-2013

rd757.dgn

RD757

Effective Date: December 1, 2013 - May 31, 2014

TWO RAIL HANDRAIL

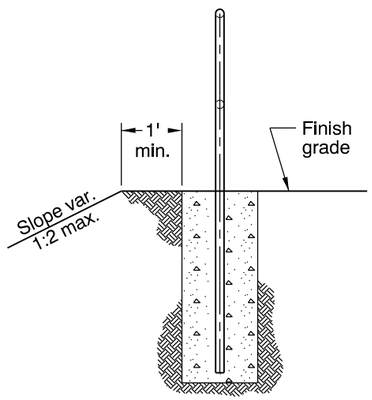

SIDE VIEW
(ON GRADE)

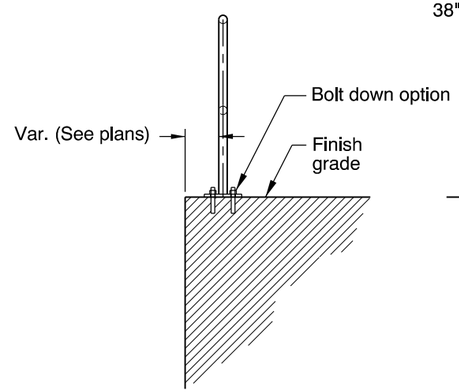

SIDE VIEW
(ON STRUCTURE)
(See general note 4)

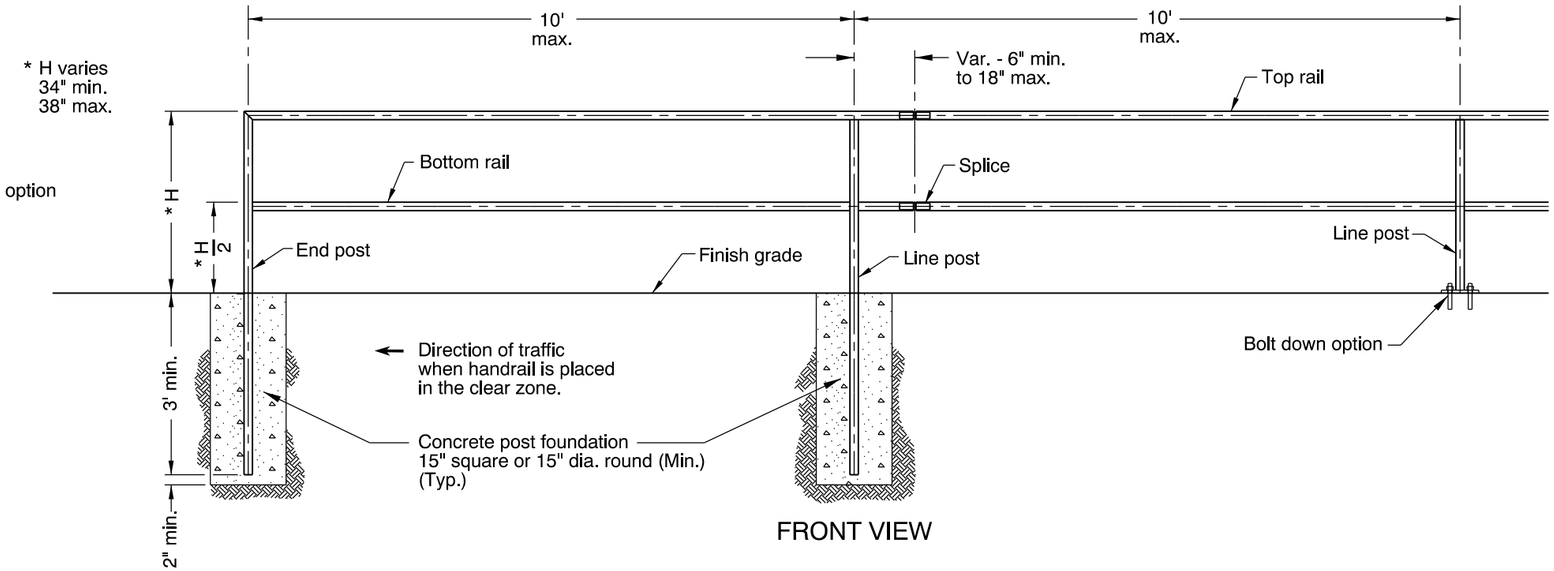

FRONT VIEW

THREE RAIL HANDRAIL

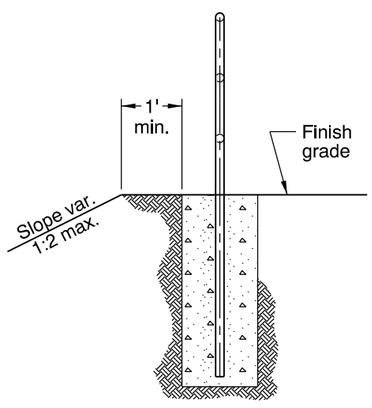

SIDE VIEW
(ON GRADE)

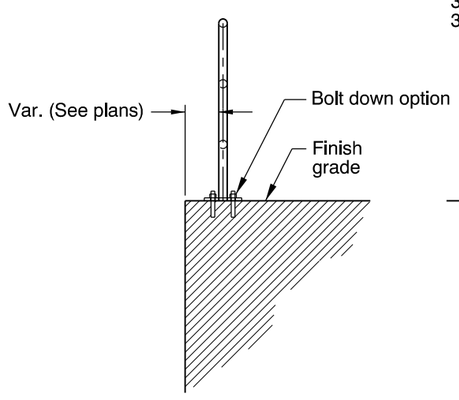

SIDE VIEW
(ON STRUCTURE)
(See general note 4)

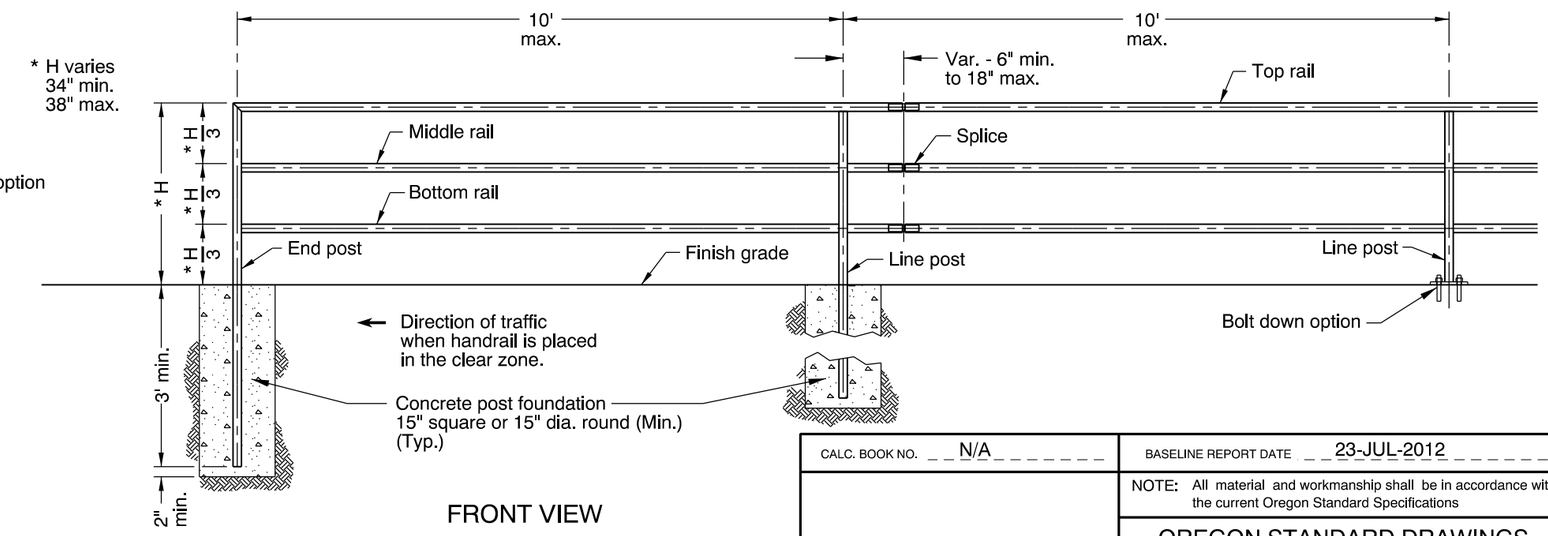

FRONT VIEW

GENERAL NOTES FOR ALL DETAILS:

1. Handrail details are based on United States Access Board Standards.
2. See Std. Drg. RD771 for details not shown.
3. Hot-dip galvanize all metal parts after fabrication.
4. Structure varies, see plans.
5. Handrail height (H) shall be constant within a run.
6. All concrete shall be commercial grade concrete.
7. See Std. Drg. RD120 for concrete stairway.

The selection and use of this Standard Drawing, while designed in accordance with generally accepted engineering principles and practices, is the sole responsibility of the user and should not be used without consulting a Registered Professional Engineer.

CALC. BOOK NO. N/A

BASELINE REPORT DATE 23-JUL-2012

NOTE: All material and workmanship shall be in accordance with the current Oregon Standard Specifications

OREGON STANDARD DRAWINGS

PEDESTRIAN HANDRAIL

2008

DATE	REVISION DESCRIPTION
06-2009	REVISED DETAILS & NOTES
07-2012	REVISED NOTES

rd770.dgn 23-JUL-2012

RD770

Effective Date: December 1, 2013 - May 31, 2014

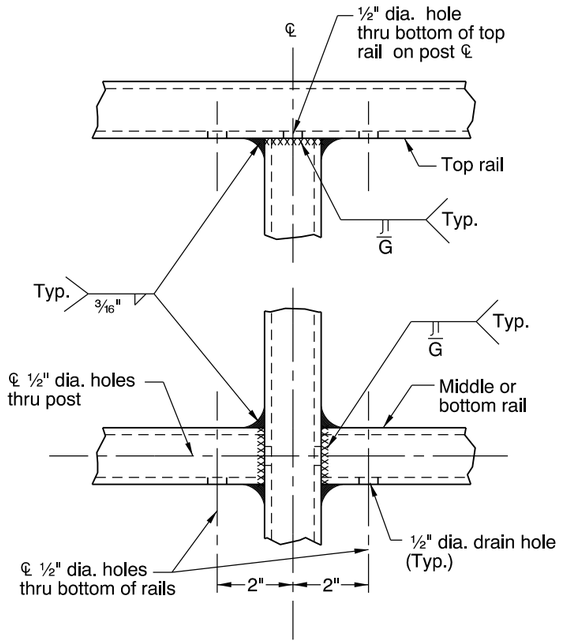

WELD DETAILS
FOR STEEL TUBING

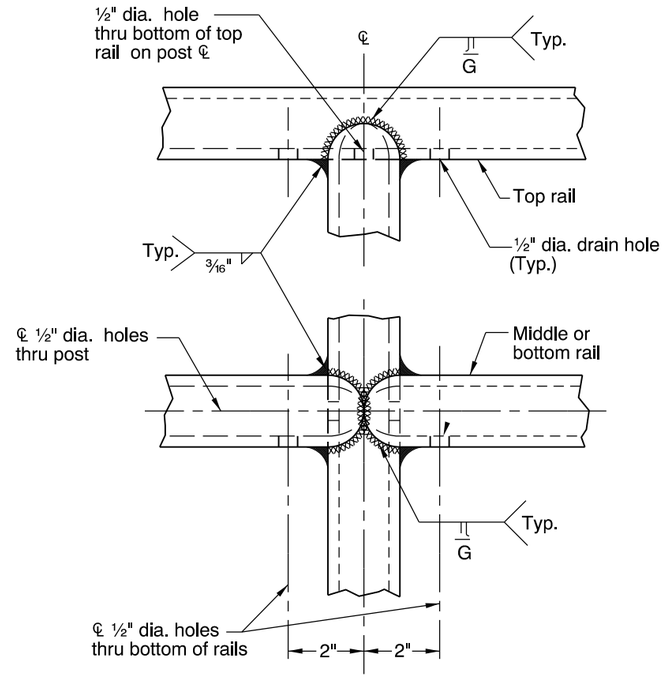

WELD DETAILS
FOR STEEL PIPE

MATERIAL TABLES

STEEL PIPE POST & RAIL MEMBERS				ROUND SPLICE BAR
NOM. DIA.	SCH.	O.D.	I.D.	O.D.
1¼"	40	1.660"	1.380"	1¼"
1½"	10	1.900"	1.682"	1½"
	40	1.900"	1.610"	

SQUARE STRUCTURAL STEEL TUBING POST & RAIL MEMBERS		SQUARE SPLICE BAR
Outside Dimensions	Wall Thickness	Outside Dimensions
1½" x 1½"	⅛"	1" x 1 "
	3/16"	¾" x ¾"

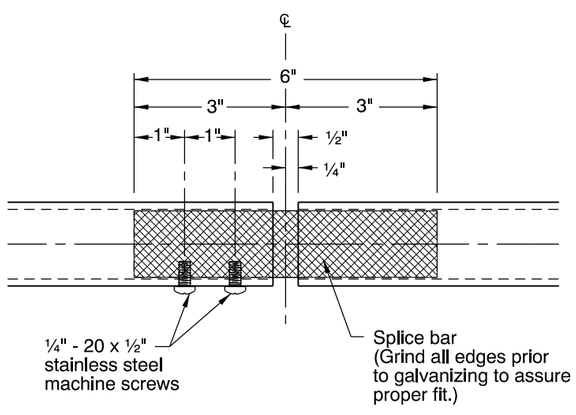

SPLICE DETAIL

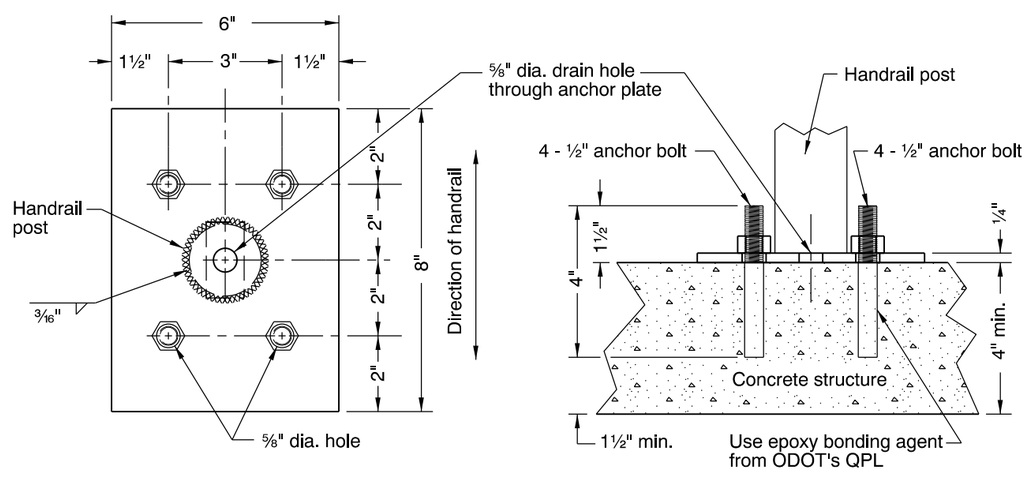

PLAN VIEW

SIDE VIEW

ANCHOR PLATE FOR BOLT DOWN OPTION

GENERAL NOTES FOR ALL DETAILS:

1. Handrail details are based on United States Access Board Standards.
2. Select materials from tables. Posts and rails shall be identical material. Structural steel tubing shall conform to ASTM specification A500, grade B.
3. Posts shall be vertical. The top rail shall be continuous over a minimum of two posts.
4. On structure, the railing shall conform to the vertical alignment of the structure. Rails shall have a splice in the post space occurring at expansion joints.
5. On grade, rails shall have splices at intervals not to exceed 100'.
6. Hot-dip galvanize all metal parts after fabrication.
7. See Std Drg. RD770 for details not shown.
8. See Std Drg. RD120 for concrete stairway.

CALC. BOOK NO. N/A

BASELINE REPORT DATE 23-JUL-2012

NOTE: All material and workmanship shall be in accordance with the current Oregon Standard Specifications

The selection and use of this Standard Drawing, while designed in accordance with generally accepted engineering principles and practices, is the sole responsibility of the user and should not be used without consulting a Registered Professional Engineer.

OREGON STANDARD DRAWINGS

PEDESTRIAN HANDRAIL DETAILS

2008

DATE	REVISION DESCRIPTION
06-2009	ADDED & REVISED NOTES
07-2012	ADDED & REVISED NOTES

rd771.dgn 23-JUL-2012

RD771

Effective Date: December 1, 2013 - May 31, 2014

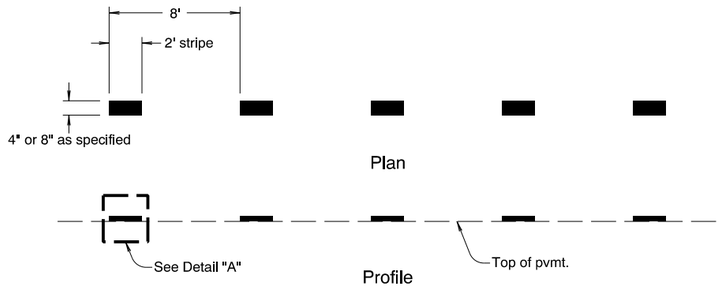

DOTTED LINE
SURFACE INSTALLED

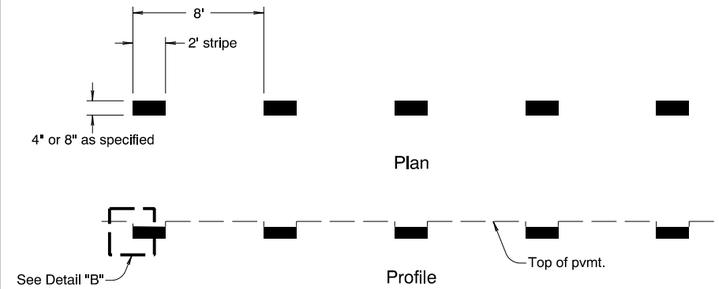

DOTTED LINE
GROOVE INSTALLED

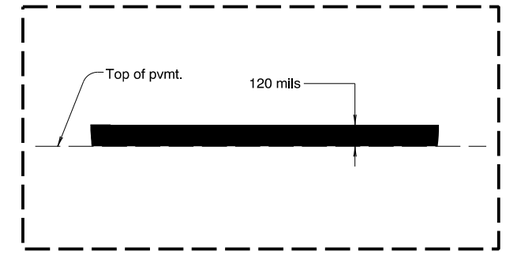

DETAIL "A"
SURFACE INSTALLED

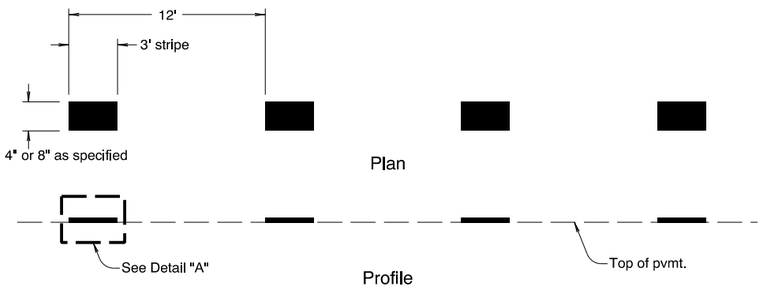

DOTTED LANE LINE
SURFACE INSTALLED

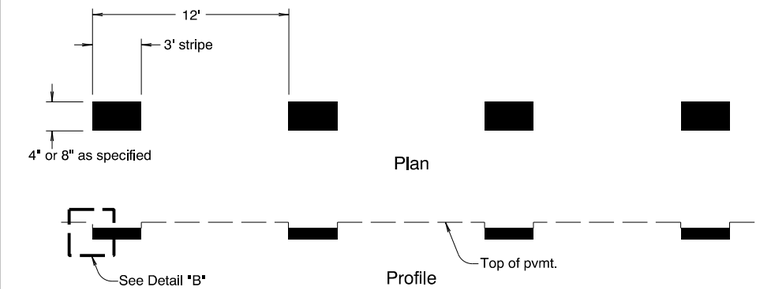

DOTTED LANE LINE
GROOVE INSTALLED

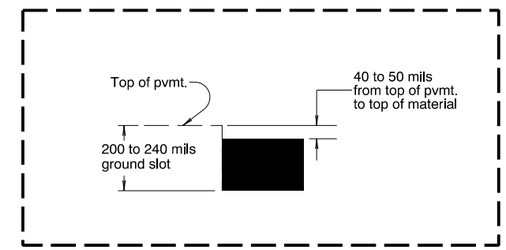

DETAIL "B"
GROOVE INSTALLED

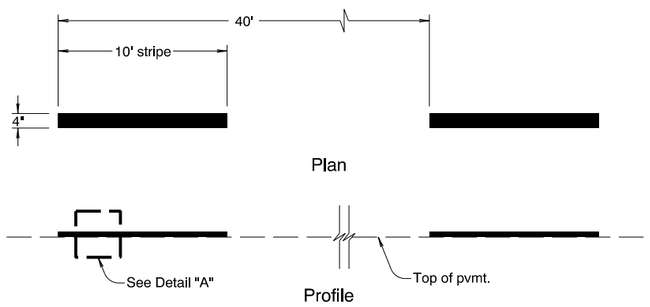

BROKEN LINE
SURFACE INSTALLED

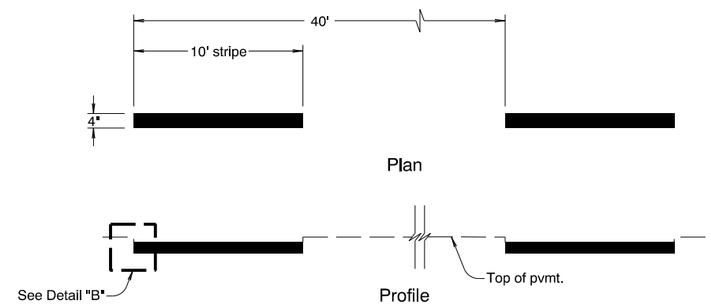

BROKEN LINE
GROOVE INSTALLED

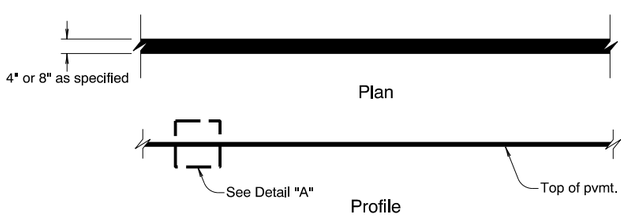

SOLID LINE
SURFACE INSTALLED

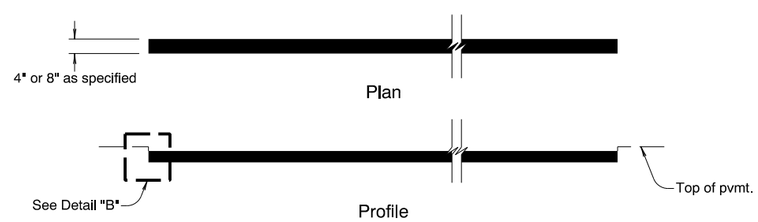

SOLID LINE
GROOVE INSTALLED

CALC. BOOK NO. N/A

BASELINE REPORT DATE 07/05/2013

NOTE: All material and workmanship shall be in accordance with the current Oregon Standard Specifications

The selection and use of this Standard Drawing, while designed in accordance with generally accepted engineering principles and practices, is the sole responsibility of the user and should not be used without consulting a Registered Professional Engineer.

OREGON STANDARD DRAWINGS
DURABLE PAVEMENT MARKINGS METHOD 'A' & METHOD 'B' SURFACE & GROOVE INSTALLED NON-PROFILED
2008

DATE	REVISION DESCRIPTION
7/2009	Removed 90 mil option
12/2010	Revised 'Lane Drop Line' to 'Dotted Lane Line' and revised the width of the striping from 8" to '4" or 8" as specified'.
7/2013	Revised formatting. Changed drawing name. Combined surface and groove installed details on same drawing.

TM521.dgn 07-05-2013

TM521

R:\SIGNING-STRIPING\PAVEMENT MARKINGS\STANDARD DRAWINGS\13 Jul\plotfile_TM500s.dgn :: Default 6/26/2013 7:56:31 AM hwyr30c

Effective Date: December 1, 2013 - May 31, 2014

★ Use Pre-Construction Posted Speed to Select the Correct Design Speed from the Tables below:

CONCRETE BARRIER FLARE RATE TABLE	
★ SPEED (mph)	MINIMUM FLARE RATE
≤ 30	8:1
35	9:1
40	10:1
45	12:1
50	14:1
55	16:1
60	18:1
65	19:1

MINIMUM LENGTHS TABLE					
★ Speed (mph)	* TAPER "L" (ft) W = Width being closed. (Lane or Shoulder)				BUFFER "B" (ft)
	W ≤10	W = 12	W = 14	W = 16	
25	105	125	145	165	75
30	150	180	210	240	100
35	205	245	285	325	125
40	265	320	375	430	150
45	450	540	630	720	180
50	500	600	700	800	210
55	550	660	770	880	250
60	600	720	840	960	285
65	650	780	910	1040	325

NOTE:

- For Lane or Shoulder closure where W < 10' , Use "L" value for W = 10'
- ★ Use 1000 feet for freeway lane closure taper lengths, See Drgs. TM860, TM861, and TM862

TRAFFIC CONTROL DEVICES (TCD) SPACING TABLE				
★ Speed (mph)	Sign Spacing (ft)			Max. Channelizing Device Spacing (ft)
	A	B	C	
20 - 30	100	100	100	20
35 - 40	350	350	350	20
45 - 55	500	500	500	40
Freeway	1000	1500	2640	40

NOTE:

- Place traffic control devices on 10 ft. spacings for intersection and access radii.
- When necessary, sign spacing may be adjusted to fit site conditions. Limit spacing adjustments to 20% of the "A" dimension for speeds < 45 mph. Limit spacing adjustments to 10% of the "A" dimension for speeds ≥ 45 mph.

NOTES:

- When paved shoulders adjacent to excavations are less than four feet wide protect abrupt edge as shown.
- Use aggregate wedge when abrupt edge is 2 inches or greater.

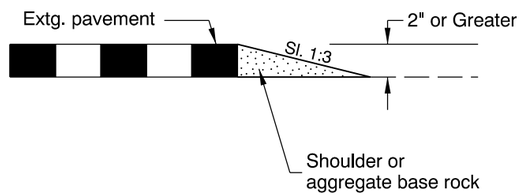

EXCAVATION ABRUPT EDGE

NOTES:

- Install PCMS beyond the outside shoulder, when possible.
- Use the appropriate type of barricade panels for PCMS location. Right shoulder, use Type B(III)R Left shoulder, use Type B(III)L
- Use six drums in shoulder taper on 20' spacing.
- Detail as shown is also used for Portable Traffic Signal installation and Portable Traffic Management System.

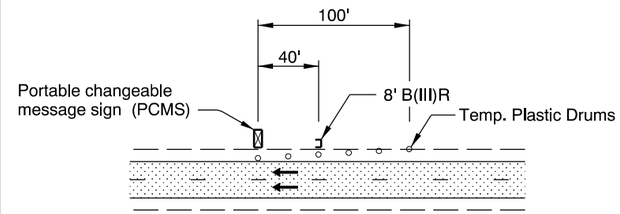

PORTABLE CHANGEABLE MESSAGE SIGN (PCMS) INSTALLATION DETAIL

NOTES:

- Install Flagger Station Lighting beyond the outside shoulder, when possible.
- Use six tubular markers in shoulder taper on 10' spacing.

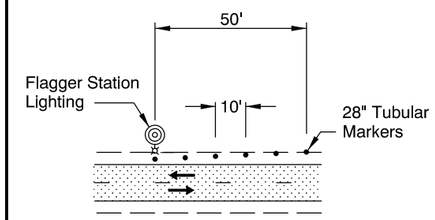

FLAGGER STATION LIGHTING DELINEATION

NOTES:

- Abrupt edges may be created by paving, operations, excavations or other roadway work. Use abrupt edge signing for abrupt edges of 1 inch or greater.
- If the excavation is located on left side of traffic, replace the 8' B(III)R barricades with 8' B(III)L barricades and replace the "RIGHT" (CW21-8C-18) riders with "LEFT" (CW21-8A-18) riders.
- Continue signing and other traffic control devices throughout excavation area at spacings shown.
- If roll-up signs are used, attach the correct (CW21-9-11) plaques to the sign face using hook and loop fasteners. Place roll-up signs in advance of barricades.

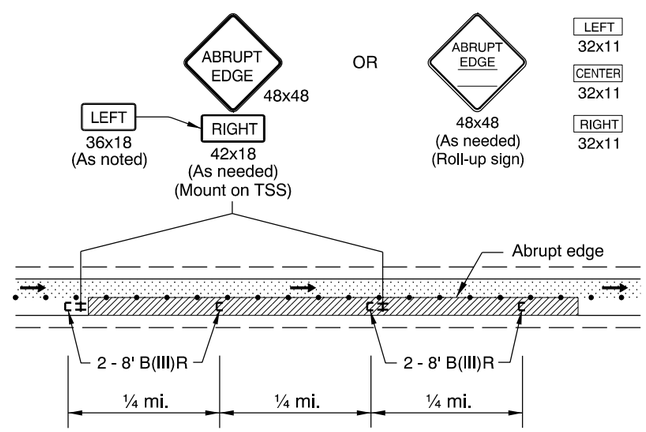

TYPICAL ABRUPT EDGE DELINEATION

GENERAL NOTES FOR ALL TCP DRAWINGS:

- Signs and other Traffic Control Devices (TCD) shown are the minimum required.
- Place Temporary Sign Support (TSS) approx. 10' behind barricade.
- Place Portable Changeable Message Sign (PCMS) approx. 40' behind barricade.
- Place sequential arrow approx. 20' behind barricade for posted speeds less than 45 mph.
- Place sequential arrow approx. 40' behind barricade for posted speeds 45 mph or greater.
- For work duration of greater than 3 days, remove or cover existing pavement markings, as directed.
- Arrows shown in roadway are not pavement legends, but directional arrows to indicate traffic movements.
- All signs are type "O4" flourescent orange, unless otherwise shown.

○ ○ ○ Temp. Plastic Drums See TCD Spacing Table for max. spacing.

• • • 28" Tubular Markers See TCD Spacing Table for max. spacing.

UNDER TRAFFIC

UNDER CONSTRUCTION

To be accompanied by Drg. Nos. TM820 & TM821

CALC. BOOK NO. TM09-01

BASELINE REPORT DATE 01-JUL-2012

NOTE: All material and workmanship shall be in accordance with the current Oregon Standard Specifications

The selection and use of this Standard Drawing, while designed in accordance with generally accepted engineering principles and practices, is the sole responsibility of the user and should not be used without consulting a Registered Professional Engineer.

OREGON STANDARD DRAWINGS

TABLES, ABRUPT EDGE AND PCMS DETAILS

2008

DATE	REVISION DESCRIPTION
01-01-2010	REVISED DRAWING AND NOTES
01-01-2011	REVISED NOTES
07-01-2011	REVISED AND ADDED NOTES
01-01-2012	REVISED NOTES AND ADDED DRAWING
07-01-2012	REVISED DRAWING AND NOTES

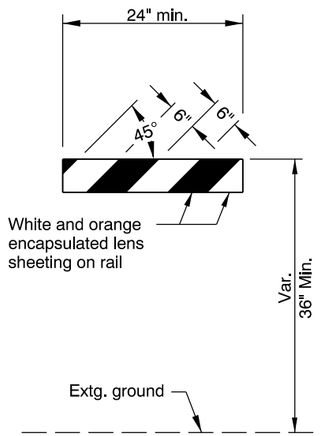

TYPE I

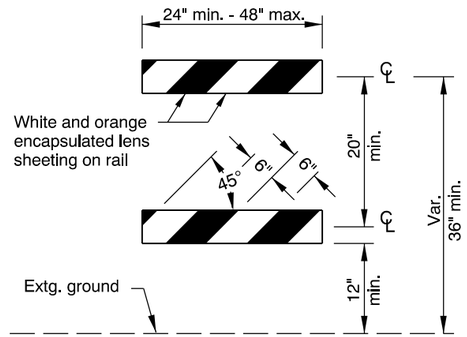

TYPE II

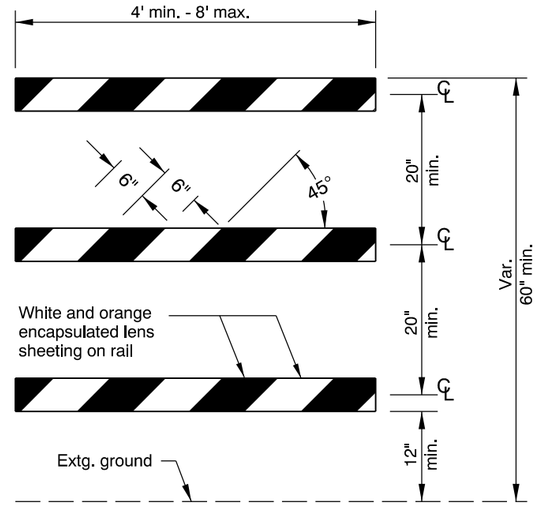

TYPE III

BARRICADE RAIL LAYOUT

GENERAL NOTES FOR ALL DETAILS:

- All non-reflectorized surfaces shall be white.
- Sandbags (approximately 25 lb sack filled with sand) may be placed on lower frame to provide additional ballast.
- For rails less than 36" long, 4" wide stripes shall be used.
- Rails must be 8" min. to 12" max. in height.
- Use barricades from ODOT Qualified Products List (QPL).
- Use 4' Type III barricades where horizontal space is limited.

NOTES:

- Markings for barricade rails shall slope downward at an angle of 45° in the direction traffic is to pass.
- Where a barricade extends entirely across a roadway, it is desirable that the stripes slope downward in the direction toward which traffic must turn in detouring.
- Where both right and left turns are provided for, slope the chevron striping downward in both directions from the center of the barricade.
- For full roadway closures, the C or LR barricade may be used. Extend barricades completely across roadway unless access is required for local road users.

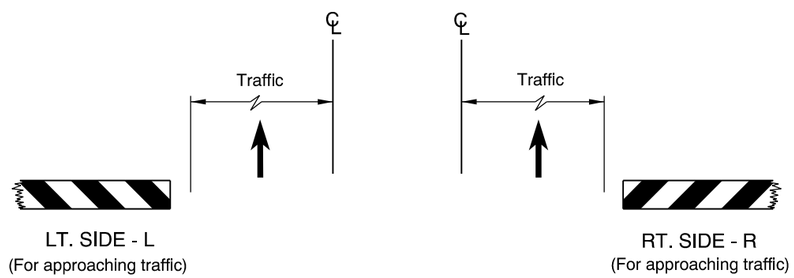

LT. SIDE - L
(For approaching traffic)

RT. SIDE - R
(For approaching traffic)

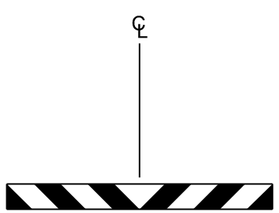

CLOSED - C
(For approaching traffic)

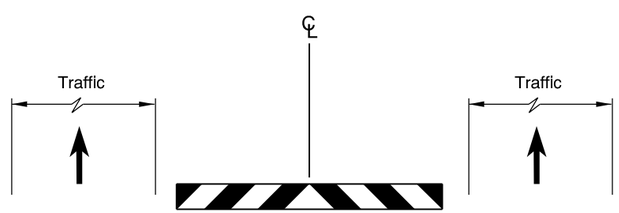

LT. / RT. - LR
(For approaching traffic)

DIAGRAM FOR BARRICADE PLACEMENT AND SLOPE MARKING

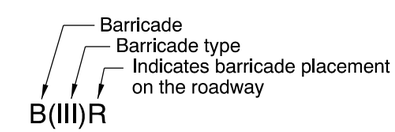

BARRICADE NOTATION

CALC. BOOK NO. N/A

BASELINE REPORT DATE 01-JUL-2011

NOTE: All material and workmanship shall be in accordance with the current Oregon Standard Specifications

The selection and use of this Standard Drawing, while designed in accordance with generally accepted engineering principles and practices, is the sole responsibility of the user and should not be used without consulting a Registered Professional Engineer.

OREGON STANDARD DRAWINGS

TEMPORARY BARRICADES

2008

DATE	REVISION DESCRIPTION
07-01-2011	REVISED AND ADDED DRAWINGS AND NOTES

Effective Date: December 1, 2013 - May 31, 2014

NOTES:

- Use Double Post TSS for a total sign area of 40 sq. ft. or less.
- Position double post TSS 10' behind an 8' (4' - where space is limited) Type (III) barricade, unless otherwise shown.

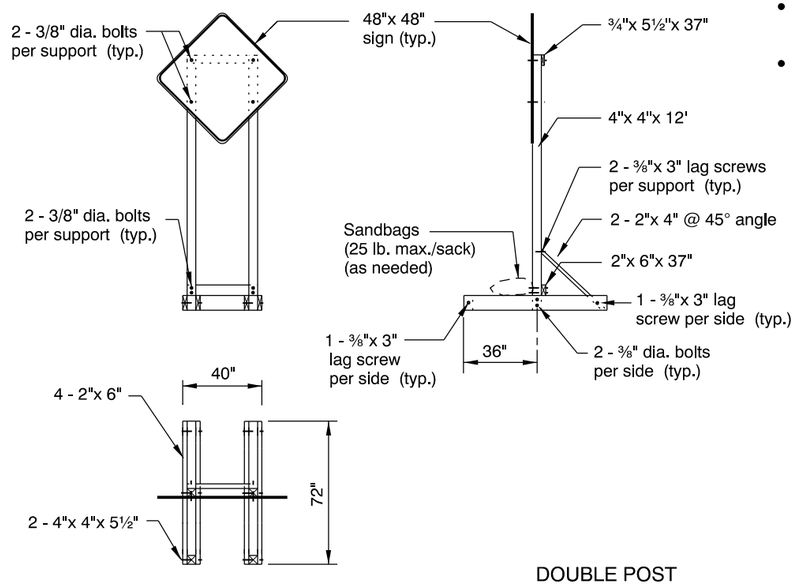

DOUBLE POST
TEMPORARY SIGN SUPPORT (TSS)

- DO NOT TIP OVER TSS.
- When not in use, locate TSS a minimum of 30' from the roadway and turn away from traffic; or, turn or cover sign and retain the Type (III) barricade for delineation.
- Use either Douglas Fir or Hem Fir, which is surfaced four sides (S4S) and free of heart center (FOHC).
- See "Temporary Sign Placement" detail for sign installation heights.

NOTES:

- Use Single Post TSS for a total sign area of 9 sq. ft. or less.
- Position single post TSS 10' behind an 8' (4' - where spce is limited) Type (III) barricade, except for installation of "BUSINESS ACCESS" signs.

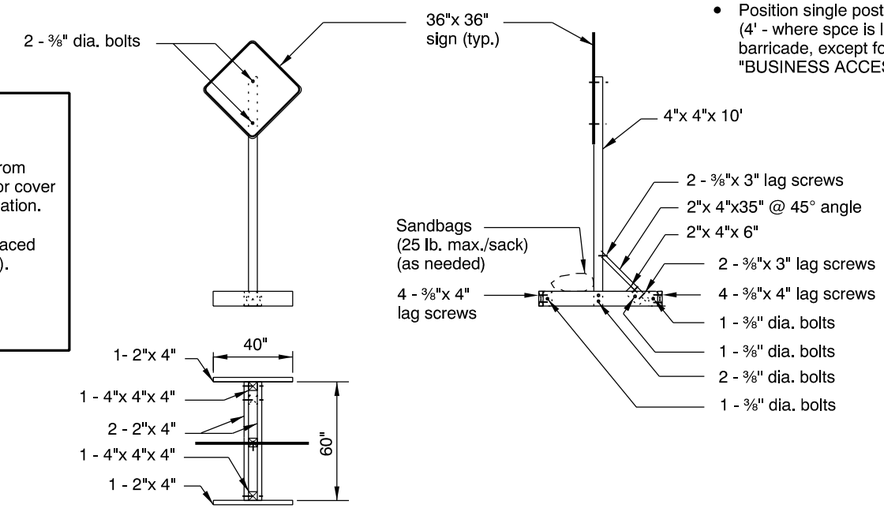

SINGLE POST
TEMPORARY SIGN SUPPORT (TSS)

NOTE:

- Avoid locating sign supports in areas designated for bicycle or pedestrian traffic. When TSS or post mounted signs are located on or over a sidewalk or bicycle facility, install secondary sign (rider) at a minimum height of 7'-0" from top of sidewalk or bicycle facility to bottom of rider.

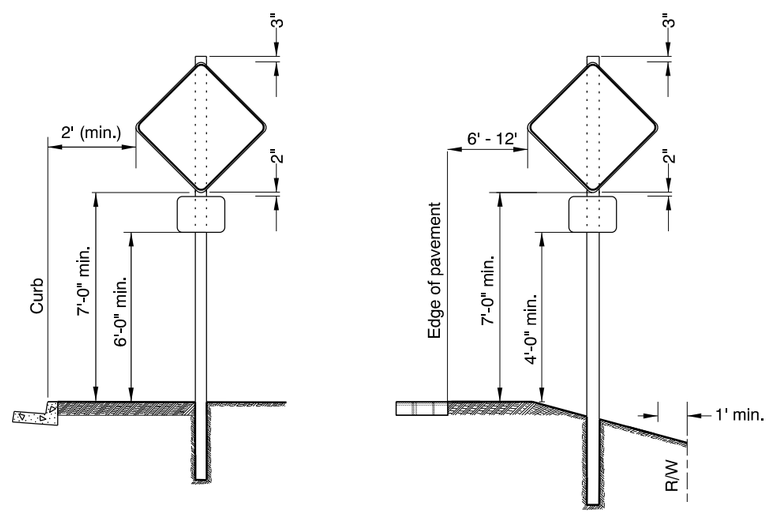

URBAN AREAS WITH CURB

URBAN AREAS - NO CURB
RURAL AREAS - CURB OR NO CURB

TEMPORARY SIGN PLACEMENT

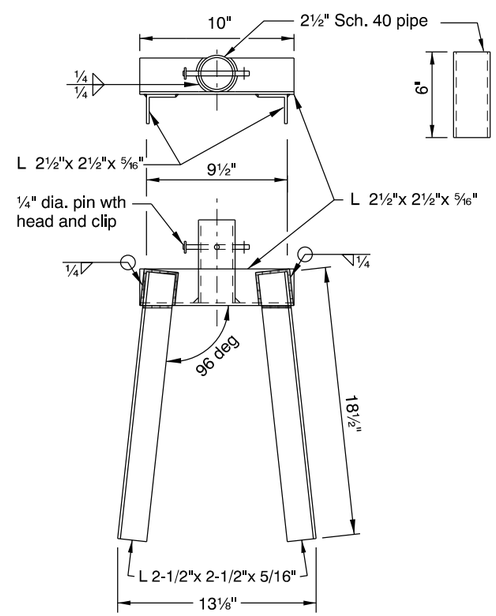

CONCRETE BARRIER SIGN SUPPORT

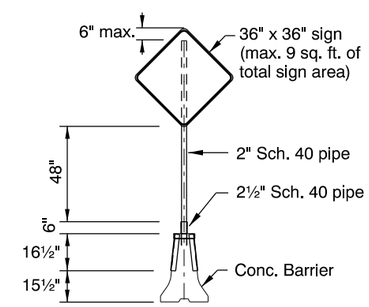

NOTES:

- Drill additional holes so sign can be rotated 90 degrees and pinned when not in use.
- All structural steel shall conform to ASTM A36.
- Support fits both 32" and 42" tall "F" barrier.
- Use for supporting a maximum 9 sq. ft. of total sign area.
- Place support at connection between two concrete barrier sections.
- Weld steel according to American Welding Society (AWS) D.1.1.
- Do not use clipped signs.

CALC. BOOK NO. N/A	BASELINE REPORT DATE 01-JUL-2012
The selection and use of this Standard Drawing, while designed in accordance with generally accepted engineering principles and practices, is the sole responsibility of the user and should not be used without consulting a Registered Professional Engineer.	NOTE: All material and workmanship shall be in accordance with the current Oregon Standard Specifications

OREGON STANDARD DRAWINGS

TEMPORARY SIGN SUPPORTS

2008

DATE	REVISION DESCRIPTION
01-01-2010	REVISED NOTES
01-01-2011	REVISED DRAWING AND NOTES
07-01-2011	REVISED DRAWING AND NOTES
01-01-2012	REVISED DRAWING
07-01-2012	REVISED NOTES

tm821.dgn 01-JUL-2012

TM821

Effective Date: December 1, 2013 - May 31, 2014

NOTE:
If closure is less than 1500 ft. from intersection install "ROAD CLOSED TO THRU TRAFFIC" sign as shown on the "TYPICAL ROAD CLOSURE" configuration.

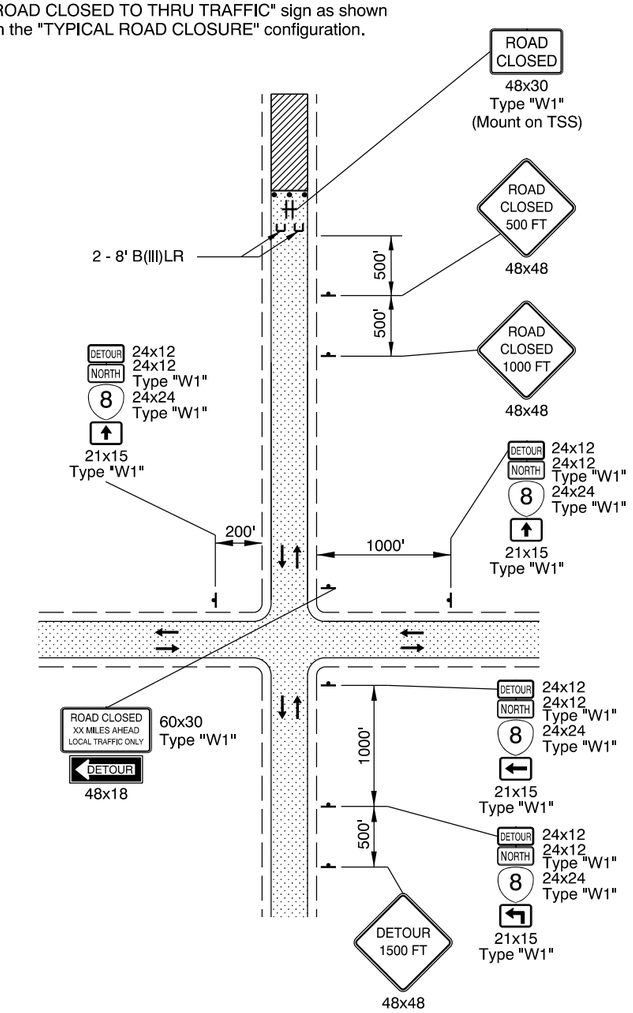

TYPICAL ROAD CLOSURE WITH DETOUR

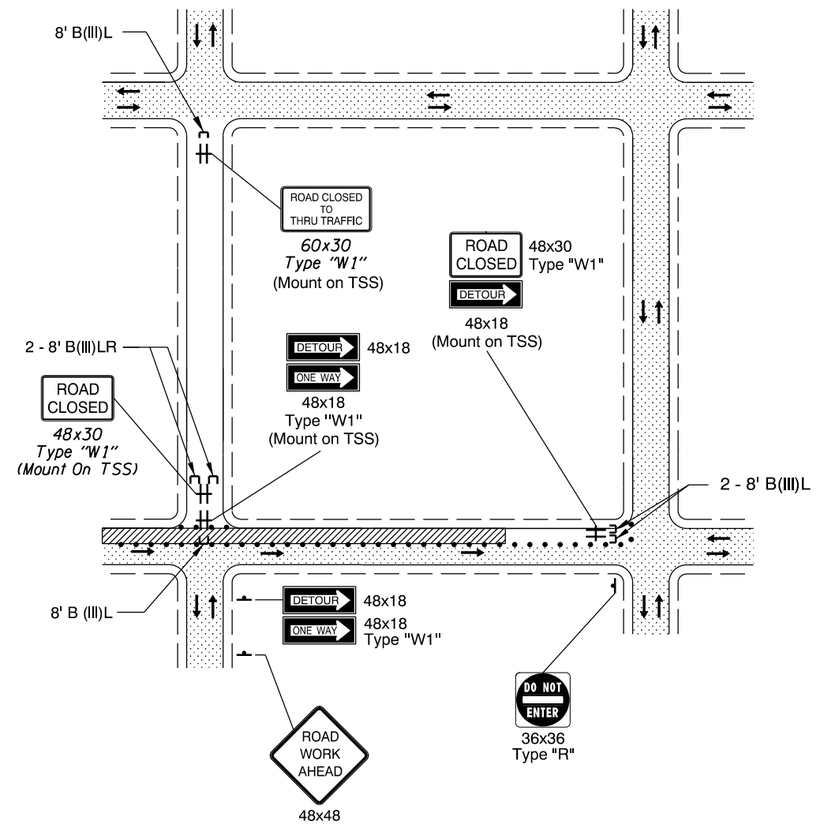

TYPICAL PARTIAL ROAD CLOSURE

NOTE:
If accesses exist between intersection and point of closure, install "ROAD CLOSED TO THRU TRAFFIC" sign as shown.

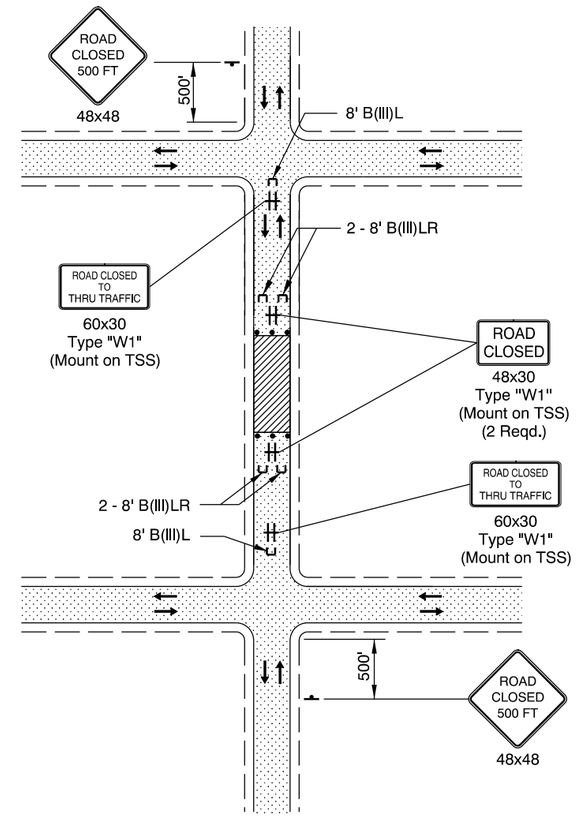

TYPICAL ROAD CLOSURE

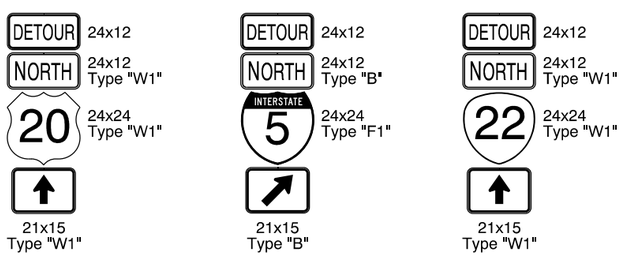

TYPICAL TRAILBLAZER ASSEMBLY

GENERAL NOTES FOR ALL DETAILS:

- Use a minimum of two Type III barricades for a road closure. For full road closures, the C or LR barricade may be used.
- Place additional signing as directed.

• • • • • 28" Tubular Markers
See TCD Spacing Table on TM800 for max. spacing.

UNDER TRAFFIC

UNDER CONSTRUCTION

To be accompanied by Drg. Nos. TM820 & TM821

CALC. BOOK NO. N/A

BASELINE REPORT DATE 01-JAN-2012

NOTE: All material and workmanship shall be in accordance with the current Oregon Standard Specifications

The selection and use of this Standard Drawing, while designed in accordance with generally accepted engineering principles and practices, is the sole responsibility of the user and should not be used without consulting a Registered Professional Engineer.

OREGON STANDARD DRAWINGS

CLOSURE DETAILS

2008

DATE	REVISION DESCRIPTION
07-01-2009	REVISED NOTES
01-01-2011	REVISED DRAWINGS AND NOTES
07-01-2012	REVISED DRAWINGS AND NOTES

tm840.dgn 01-JUL-2012

TM840

Effective Date: December 1, 2013 - May 31, 2014

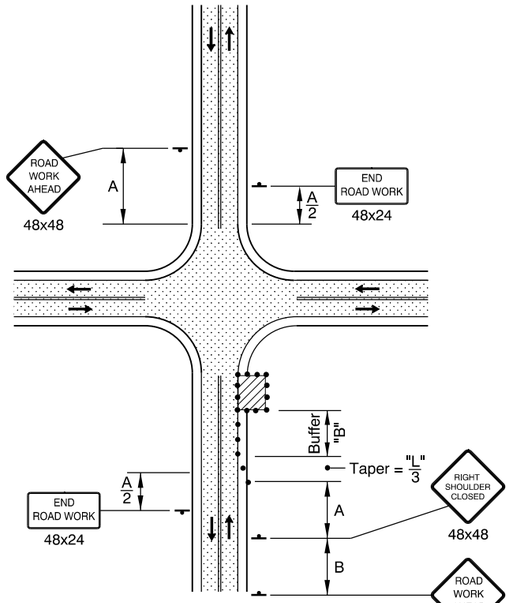

2-LANE, 2-WAY
SHOULDER CLOSURE

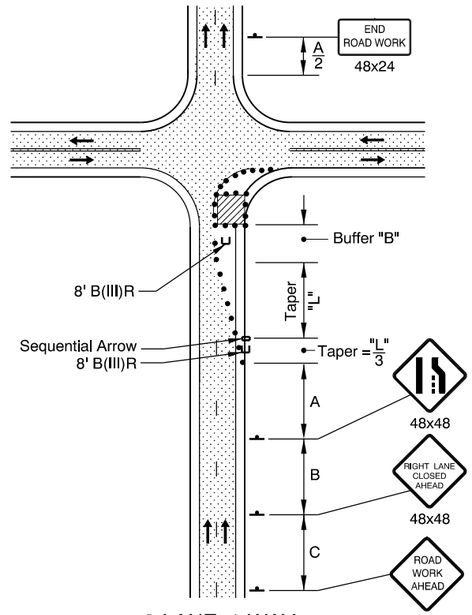

2-LANE, 1-WAY
RIGHT LANE CLOSURE

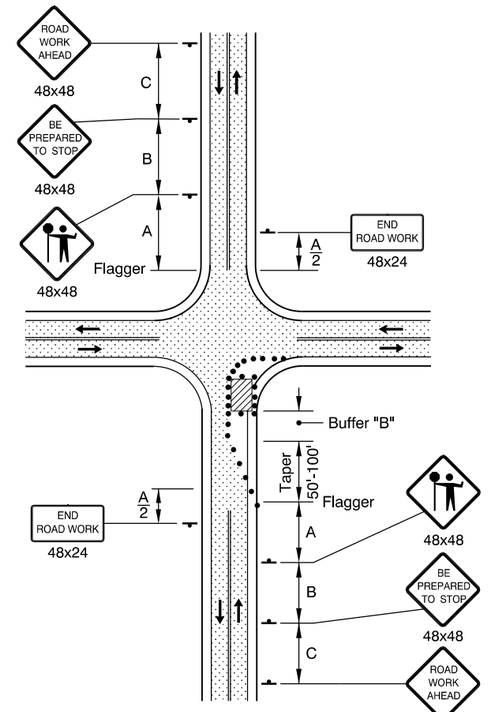

2-LANE, 2-WAY
ONE LANE CLOSURE

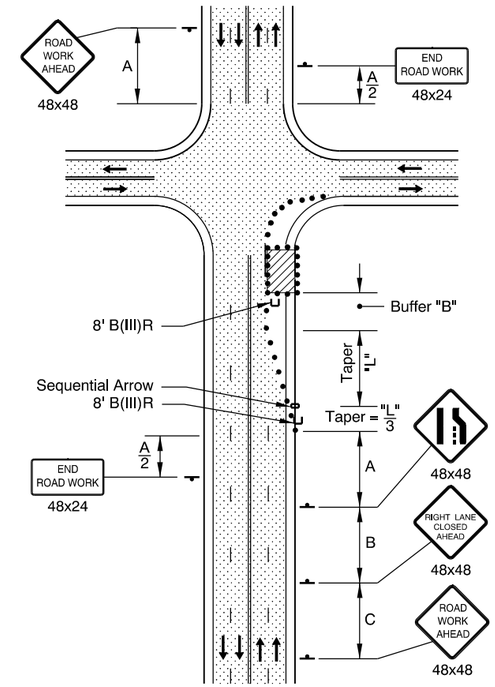

4-LANE, 2-WAY
RIGHT LANE CLOSURE, NEAR SIDE

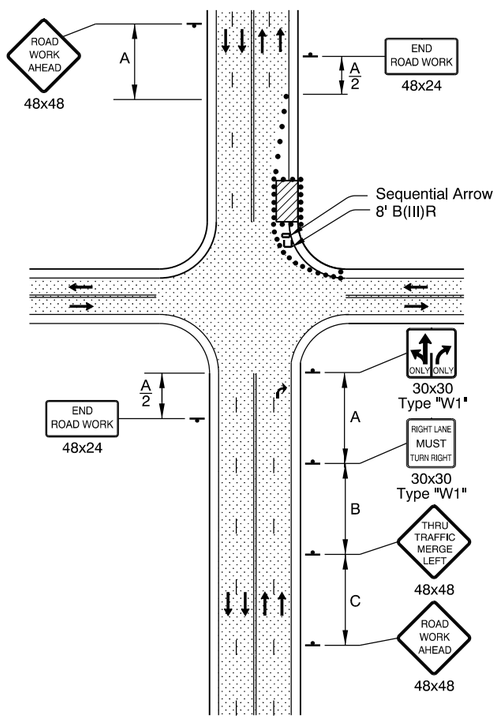

4-LANE, 2-WAY
RIGHT LANE CLOSURE, FAR SIDE

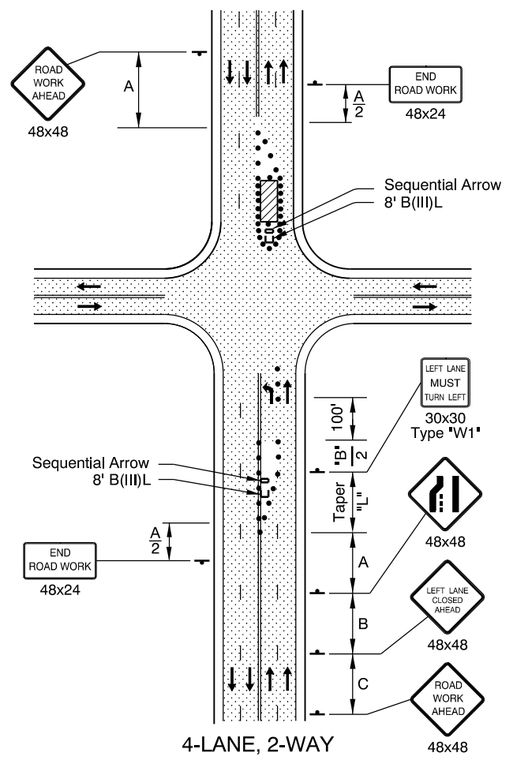

4-LANE, 2-WAY
LEFT LANE CLOSURE, FAR SIDE

GENERAL NOTES FOR ALL DETAILS:

- Additional Traffic Control Measures (TCM) may be required for all legs of the intersection.
- The "BE PREPARED TO STOP" sign shall be used only in conjunction with the FLAGGER symbol sign.
- To determine Taper Length ("L") and Buffer Length ("B"), use the "MINIMUM LENGTHS TABLE" on Drg. TM800.
- For left lane or shoulder work, place TCD to close left lane or shoulder. Use "LEFT LANE CLOSED AHEAD" sign, "LEFT LANE ENDS" (W4-2L) symbol sign, or "LEFT SHOULDER CLOSED" sign, where applicable.
- To determine sign spacing A, B, and C, use "TRAFFIC CONTROL DEVICES (TCD) SPACING TABLE" on Drg. TM800.
- When a through road intersects within the work zone, place a "ROAD WORK AHEAD" sign in advance of the intersection at sign spacing A.
- Use plastic drums in lane closure tapers when the posted speed is 45 mph or greater.
- Where shoulder width is limited, Sequential Arrow may be placed within the lane closure taper.

• • • • • 28" Tubular Markers
See TCD Spacing Table on TM800 for max. spacings.

• • • 28" Tubular Markers
See TCD Spacing Table on TM800 for max. spacings.

UNDER TRAFFIC

UNDER CONSTRUCTION

To be accompanied by Drg. Nos. TM820, TM821 & TM840

The selection and use of this Standard Drawing, while designed in accordance with generally accepted engineering principles and practices, is the sole responsibility of the user and should not be used without consulting a Registered Professional Engineer.

CALC. BOOK NO. N/A

BASELINE REPORT DATE 01-JUL-2011

NOTE: All material and workmanship shall be in accordance with the current Oregon Standard Specifications

OREGON STANDARD DRAWINGS

INTERSECTION WORK ZONE DETAILS

2008

DATE	REVISION DESCRIPTION
07-01-2011	REVISED DRAWING AND NOTES
07-01-2012	REVISED DRAWING

tm841.dgn 01-JUL-2012

TM841

Effective Date: December 1, 2013 - May 31, 2014

NOTE:
- Continue "LOOSE GRAVEL" and "DO NOT PASS" signing throughout the area at spacing shown.

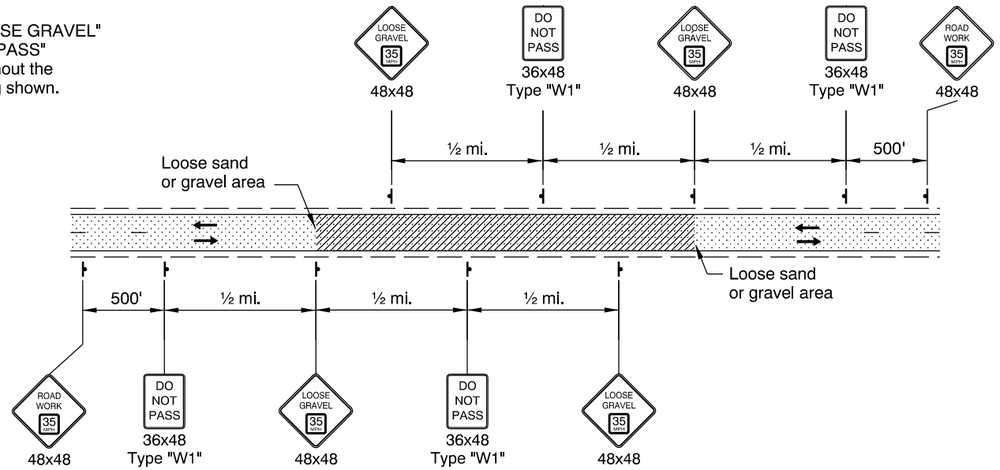

2-LANE, 2-WAY ROADWAY
LOOSE GRAVEL IN ROADWAY

NOTE:
- Continue "ABRUPT EDGE" and "DO NOT PASS" signing throughout the area at spacing shown.

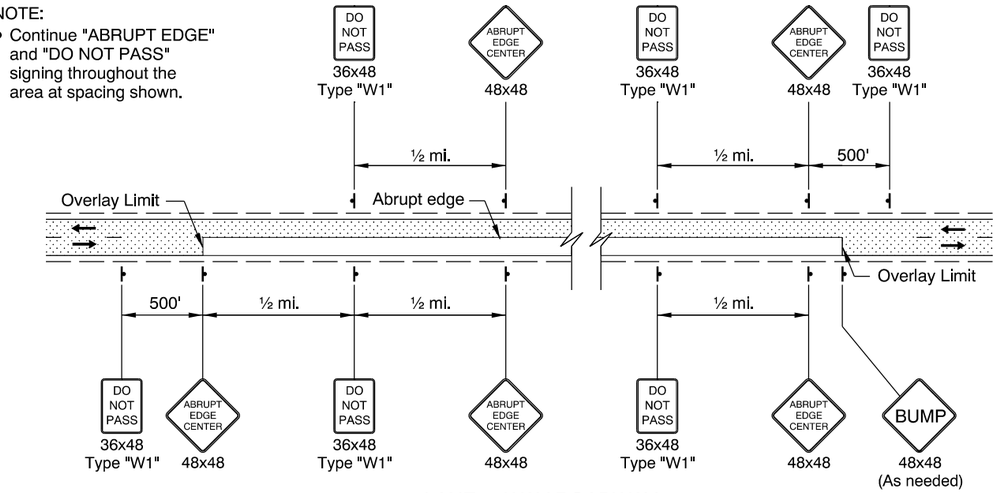

2-LANE, 2-WAY ROADWAY
OVERLAY AREA

NOTES:
- Place Advance Flagger and additional signing when traffic queues extend beyond initial warning signing OR when sight distance is restricted.
- Relocate initial "ROAD WORK AHEAD" sign in advance of additional "BE PREPARED TO STOP" sign.

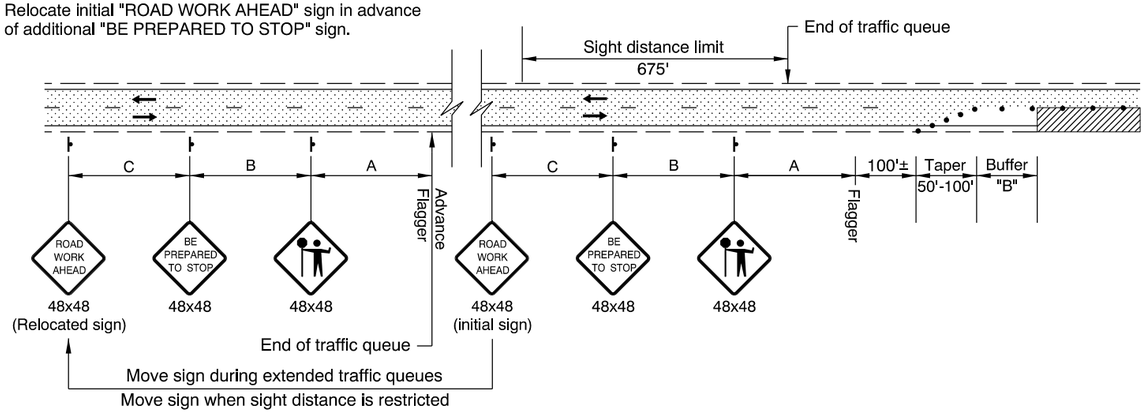

EXTENDED TRAFFIC QUEUES FOR ADVANCE FLAGGING

NOTE:
- When using pilot cars in addition to flaggers for paving operations, increase Tubular Marker spacing along centerline to 200' within the Work Area.

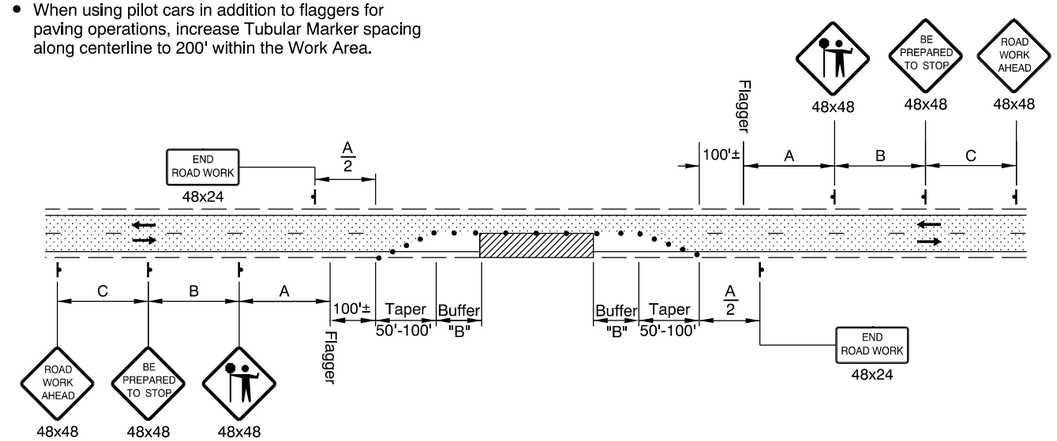

2-LANE, 2-WAY ROADWAY
ONE LANE CLOSURE

GENERAL NOTES FOR ALL DETAILS:
- The "FLAGGER" symbol sign shall be used only in conjunction with the "BE PREPARED TO STOP" sign.
- Signing and other TCD shown to be installed in conjunction with the work areas, shall move with the work areas.
- Cover existing passing zone signing, as directed.
- Install temporary striping as required.
- To determine Taper Length ("L") and Buffer Length ("B"), use the "MINIMUM LENGTHS TABLE" shown on Drg. No. TM800.
- To determine sign spacing A, B, and C, use "TRAFFIC CONTROL DEVICES (TCD) SPACING TABLE" on Drg. No. TM800.

• • • • • 28" Tubular Markers on 20' max. spacing for flagger tapers.

• • • 28" Tubular Markers See TCD Spacing Table on TM800 for max. spacing.

UNDER TRAFFIC

UNDER CONSTRUCTION

CONSTRUCTION UNDER TRAFFIC

To be accompanied by Drg. Nos. TM821

CALC. BOOK NO. N/A

BASELINE REPORT DATE 01-JAN-2012

NOTE: All material and workmanship shall be in accordance with the current Oregon Standard Specifications

The selection and use of this Standard Drawing, while designed in accordance with generally accepted engineering principles and practices, is the sole responsibility of the user and should not be used without consulting a Registered Professional Engineer.

OREGON STANDARD DRAWINGS

2-LANE, 2-WAY ROADWAYS

2008

DATE	REVISION DESCRIPTION
07-01-2009	REVISED NOTES
01-01-2010	REVISED NOTES
01-01-2012	REVISED DRAWING

Effective Date: December 1, 2013 - May 31, 2014

APPENDIX A
Reports Prepared by Others

Phase II Geotechnical Investigation

Franklin/McVay Sanitary Sewer Extension

Springfield, Oregon

Prepared for:

Murray, Smith & Associates, Inc.
Portland, Oregon

November 13, 2013

Professional Geotechnical Services

Foundation Engineering, Inc.

Foundation Engineering, Inc.
Professional Geotechnical Services

William Evonuk, P.E.
Murray, Smith & Associates, Inc.
121 SW Salmon, Suite 900
Portland, Oregon 97204

November 13, 2013

Franklin/McVay Sanitary Sewer Extension
Phase II Geotechnical Investigation
Springfield, Oregon

Project 2131052

Dear Mr. Evonuk:

We have completed the requested Phase II geotechnical investigation for the above-referenced project. Our report includes a description of our work, a discussion of the site conditions, boring logs, a summary of field and laboratory tests, and a discussion of key geotechnical issues pertaining to the selected sewer line alignment.

It has been a pleasure assisting you with this phase of your project. Please do not hesitate to contact us if you have any questions or if you require further assistance.

Sincerely,

FOUNDATION ENGINEERING, INC.

Erin J. Gillaspie, P.E.
Staff Engineer

James K. Maitland, P.E., G.E.
Principal Engineer

EJG/JKM/zc
enclosure

REGISTERED PROFESSIONAL ENGINEER
10701
OREGON
July 18, 1980
JAMES K. MAITLAND
EXPIRES: 12/31/14

PHASE II GEOTECHNICAL INVESTIGATION
FRANKLIN/MCVAY SANITARY SEWER EXTENSION
SPRINGFIELD, OREGON

BACKGROUND

The City of Springfield (City) plans to construct a new trunk sewer along the Franklin Blvd./McVay Highway (Hwy 225) corridor from Franklin Boulevard (Business Hwy 126) to the Central Oregon & Pacific Railroad (COPR) crossing, located ±800 feet south of the intersection with Nugget Way (Figure 1A, Appendix A). The selected alignment is shown on Figure 2A (Appendix A). The new sewer line will be ±4,670 feet long and will range from 8 to 15 inches in diameter.

Murray, Smith & Associates, Inc. (MSA) is the prime designer. Foundation Engineering, Inc. (FEI) was retained by MSA as the geotechnical consultant. Our scope of work was summarized in a proposal dated May 23, 2013, and was approved by a Task Order under an Agreement for Services dated July 29, 2013.

SCOPE OF WORK

The geotechnical work was completed in two phases. Preliminary work included a literature review of local subsurface information and a field reconnaissance of the alignment alternatives. Results of that work were summarized in a technical memorandum dated August 28, 2013, and were used in the alignment selection process. Phase II included exploratory drilling and sampling along the selected alignment (Alternative A, also referred to herein as the selected alignment), installation and monitoring of piezometers, laboratory testing and preparation of this report.

LITERATURE REVIEW

Our work included a review of available geologic and seismic publications and maps to characterize the local and regional geology. Local water well logs available from the Oregon Department of Water Resources website and information from geotechnical investigations previously completed by FEI and other consultants in the Eugene-Springfield area were also reviewed.

FIELD RECONNAISSANCE

Our site reconnaissance was completed on August 5, 2013. The reconnaissance included traversing the proposed alignments and observing and photographing the surface features to record any apparent variations in the local site conditions, geology and topography. During our site visit, we observed existing residential developments, grade changes, evidence of shallow ground water, potential utility conflicts, cut and fill slopes, and other features that could impact sewer line construction.

LOCAL GEOLOGY

The community of Glenwood is separated from the City of Springfield to the north and east by the Willamette River and by I-5 to the south and west. Glenwood and Springfield are located within the southern extent of the Willamette Valley, which is bordered by the Western Cascades to the east and the Coast Range to the west.

Local geologic mapping indicates the selected alignment is underlain by meander-belt alluvium associated with the meandering Willamette River (O'Connor et al., 2001; Madin and Murray, 2006). The alluvium is predominantly sandy gravel with some silt to boulder-sized fluvial deposits. Local water well logs in the vicinity of the selected alignment typically indicate variable fill followed by sandy gravel or silt underlain by sandy gravel.

Several well logs indicate siltstone, "blue rock" or bedrock beneath the gravel at depths of ±18 to 23 feet. Geologic mapping indicates the local bedrock is primarily marine, tuffaceous sandstone and siltstone of the Eugene Formation that was deposited concurrently and interfingers with the volcaniclastic deposits, andesitic lapilli tuff and basalt flows of the Fisher Formation (Yeats et al., 1996; Sherrod and Smith, 2000; Hladky and McCaslin, 2006; Madin and Murray, 2006; McClaughry et al., 2010). In some areas, the Eugene and Fisher Formations (Eocene to Oligocene; ±45 to 35 million years old) are overlain by basalt, andesitic basalt, tuff and pyroclastics of the younger, Little Butte Volcanics (Oligocene to Miocene; ±35 to 17 million years old), which form many of the hilltops and more resistant outcrops of southern Eugene and south and eastern Springfield (Yeats et al., 1996; Madin and Murray, 2006). Basaltic intrusions are also mapped to the south and west of the selected alignment (Madin and Murray, 2006).

PRELIMINARY (PHASE I) STUDY

Four potential alignments (designated Alternatives A, B, C and D) were considered at the outset of the project. FEI completed a preliminary reconnaissance of the four alternatives and summarized our findings in a technical memorandum dated August 28, 2013. That memorandum describes the four alternatives and discusses the surface conditions and anticipated subsurface conditions along them. For the sake of brevity that description is not repeated herein. Rather, we have focused on the selected alternative.

MSA summarized the findings of their preliminary work in a technical memorandum dated September 10, 2013. That memorandum describes the four potential alignments in detail. Subsequent to that study, the City selected Alternative A (described below).

Alternative A begins at the intersection of Business Hwy 126 with Hwy 225. The Alternative A alignment follows Hwy 225 ±4,670 feet south to approximately the bridge over the COPR tracks. The selected alignment is shown in Figure 2A (Appendix A). A profile developed by MSA for the selected alignment indicates the typical trenching depths will vary between ±12 and 17 feet.

DISCUSSION OF SITE CONDITIONS ALONG THE SELECTED ALIGNMENT

The selected alignment follows Hwy 225 from Bus. Hwy 126 to the southern terminus. This alignment is zoned Employment Mixed Use and extends through predominantly commercial developments. Relatively heavy traffic was observed on the selected alignment during our site reconnaissance.

Bus. Hwy 126 to UPRR. From Bus. Hwy 126 south to the UPRR crossing, overhead power and underground communication lines are located east of Hwy 225. Water and gas lines (including a 6-inch high pressure gas line) extend along the west shoulder of the highway. The railroad crosses Hwy 225 on an elevated trestle. Sewer line construction will encounter relatively heavy traffic and conflicts with buried and overhead utilities.

UPRR to Nugget Way. Wide shoulders and turnouts are abundant in this area. Utilities consist of overhead power lines and buried communications and gas lines east of Hwy 225. Underground water extends along the west side of the highway.

Nugget Way to Southern Terminus. From Nugget Way to the planned southern terminus, the selected alignment parallels Hwy 225 through typically undeveloped fields. Utilities along this portion of the alignment are consistent with the UPRR to Nugget Way portion of the selected alignment. Construction in this area will have minimal impact to traffic.

FIELD EXPLORATION

Five boreholes were drilled along the selected alignment between October 9 and 11, 2013. A sixth borehole was completed on November 5, 2013. The boreholes were drilled by Western States Soil Conservation, Inc. Boreholes BH-1, BH-2, BH-3, BH-5 and BH-6 were completed using a CME-55, truck-mounted rig with mud-rotary and hollow-stem auger drilling techniques. BH-4 was completed using a CME-55, track-mounted drill rig and mud-rotary drilling techniques. The boreholes were drilled to depths of ±20 to 25 feet, and all terminated in bedrock.

Samples were typically obtained at 2.5-foot intervals to the anticipated depth of the invert, and at 5-foot intervals thereafter. Disturbed samples were obtained with a split-spoon sampler. The Standard Penetration Test (SPT), which is run when the split-spoon is driven, provides an indication of the relative stiffness or density of the soils and rock hardness. A relatively undisturbed sample of fine-grained soil was obtained in BH-6 using a thin-walled Shelby tube.

Five-foot long core runs were made in BH-2 and BH-3. HQ-size core specimens of the bedrock were obtained at those locations for laboratory testing and observation in our office.

One-inch diameter, PVC standpipe piezometers were installed in BH-2, BH-4, and BH-6. The depths of the slotted sections are shown on the appended logs. Recorded ground water levels are discussed below.

The soil and rock profiles observed in the borings were continuously logged during drilling. The final logs (Appendix B) were prepared based on a review of the field logs, an examination of the soil and rock samples in our office, and the laboratory test results. The approximate boring locations are shown on Figure 2A (Appendix A).

SUBSURFACE CONDITIONS

Subsurface conditions encountered in the borings are discussed below. More detailed information is available in the appended logs. The boring locations were selected to provide an overview of the subsurface conditions. However, the number of borings was limited by available budget and the selection of drilling sites was often predicated on available access and utility or other conflicts. Therefore, extrapolation of subsurface information from widely-spaced borings is inevitable.

Surface elevations for the borings were estimated from a site survey prepared by OBEC Consulting Engineers and should be considered approximate. The design invert depth at each boring location was estimated from a preliminary profile provided by MSA. The description of soil conditions at the estimated invert elevations provided below were based on proposed pipe grades. Some changes in the invert elevations may occur as the design progresses.

BH-1

BH-1 was drilled near the middle of the north-bound lane on Hwy 225, ±210 feet south of the intersection with Bus. Hwy 126. The surface elevation at BH-1 was estimated to be ±El. 446.5.

The pavement section at BH-1 consists of ±10 inches of asphalt concrete (AC) followed by sandy gravel (base aggregate) to ±2 feet. The pavement section is underlain by medium stiff silt with some gravel (fill) to ±7.5 feet. The fill is underlain by ±1.5 feet of loose, gravelly sand with trace silt and occasional cobbles to ±10 inches in diameter (alluvium), followed by very dense, sandy gravel (alluvium) from ±9 to 20.5 feet. The granular alluvium grades to medium dense below ±17.5 feet. SPT (N) values recorded in the granular alluvium ranged from 17 to practical refusal (N>100). Grey, extremely weak (R0), fresh to slightly weathered siltstone (Eugene Formation) was encountered from 20.5 to 22.8 feet (the limits of exploration).

Based on the Alternative A profile, we estimate the pipe invert along the segment between Bus. Hwy 126 and the UPRR overcrossing will extend to ±16 to 17 feet (±El. 429 to El. 430). The surface of the bedrock at BH-1 lies at ±20.5 feet (±El. 426.0). Therefore, most of the pipe in this segment is expected to be bedded in medium dense to very dense sandy gravel except as discussed in the following section (i.e., possible bedrock at the invert elevation between BH-1 and BH-2).

BH-2

BH-2 was drilled in a gravel-surfaced turnout located south of the UPRR trestle, at the northwest corner of the 19th Avenue intersection with Hwy 225. The boring was completed ±24 feet west of the intersection and ±3 feet north of the north edge of pavement on 19th Avenue. We estimated the ground surface at BH-2 lies at ±El. 440.5.

Approximately 5 feet of fill was encountered at BH-2. The fill consists of dense gravelly sand with trace to some silt. A ±2-foot diameter boulder was encountered in the fill, making drilling very slow and difficult. Drilling circulation was also lost while drilling in the fill, probably due to the presence of open-graded gravels and cobbles. Repeated caving through the fill necessitated the use of a casing advancer to expedite drilling.

The fill is underlain by dense, sandy gravel (alluvium) that extends to the bedrock surface at ±14 feet (±El. 426.5). N values of 13 to 43 were recorded in the sandy gravel.

Grey, extremely weak (R0), moderately weathered siltstone (Eugene Formation) was encountered from ±14 to 22 feet (the limits of exploration). The siltstone becomes very weak (R1) and fresh below ±20.6 feet. The bedrock was cored from ±17 to 22 feet using an HQ-size core barrel. A recovery ratio of 95% and a Rock Quality Designation (RQD) of 77% were recorded for the core run.

The planned sanitary sewer profile indicates the pipe invert in the vicinity of the UPRR overcrossing (BH-2) will extend ±15 feet below the ground surface (±El. 430). Based on the soil profile at BH-2 (and previous borings described above), we anticipate the sewer pipe will be bedded in R0 to R1 siltstone to silty sandstone in the vicinity of BH-2.

Previous explorations by other consultants (GeoDesign, 2003) included four borings on Hwy 225 between Bus. Hwy 126 and 19th Avenue. Those explorations encountered silt to depths of ±4.5 to 8 feet, followed by medium dense to dense gravel. R1 to R2 siltstone was reported at depths of ±18 feet (south of FEI's BH-1) and at ±13.5 to 15 feet just north of the intersection with 19th Avenue and FEI's BH-2. Although these profiles are consistent with those found in BH-1 and BH-2, the information suggests the surface of the siltstone rises several feet between BH-1 and BH-2.

A piezometer was installed in BH-2 with the slotted section extending from ±4 to 9 feet. The depth of the piezometer installation was limited due to repeated caving after the drill rod was removed. Water was recorded in the piezometer at a depth of ± 7.9 feet on October 11, 2013. However, we believe the actual ground water level is below ±9 feet, as discussed in the Ground Water subsection, below.

BH-3

BH-3 was drilled in the Duck Stop Mart parking lot, near the intersection of 20th Street and Hwy 225. The boring was completed ±122 feet north of the market building and ±37 feet east of the edge of Hwy 225 pavement. We estimate the ground surface at BH-3 lies at ±El. 449.

Approximately 4 feet of fill was encountered at BH-3. The fill consist of medium dense sandy gravel and medium dense gravel with some silt. The fill is underlain by sandy gravel with trace silt (alluvium) to a depth of ±20 feet (±El 429.0, the bedrock surface). Cobbles up to ±4 inches in diameter were encountered in the gravel. The upper gravel is medium dense, becoming loose at ±7.5 feet and dense below ±10 feet.

Grey, extremely weak (R0), slightly weathered siltstone was encountered at ±20 feet, grading to weak (R2) silty sandstone to ±25 feet, the limit of the exploration. The rock was cored from 20 to 25 feet. A recovery ratio of 100% and an RQD of 81% were recorded for the core run.

We estimate the pipe invert at BH-3 will extend ±17 feet below the ground surface (±El. 432). Therefore, the pipe is expected to be bedded in predominantly dense sandy gravel in this area.

BH-3 was advanced using a hollow-stem auger. Ground water was noted at a depth of ±17.5 feet at the time of drilling.

BH-4

BH-4 was drilled at the southwest corner of the intersection of Nugget Way and Hwy 225. The borehole was located ±29 feet south of the Nugget Way pavement and ±24 feet west of the edge of pavement on Hwy 225. We estimate the ground surface at BH-4 lies at ±El. 450.

Approximately 7 feet of possible alluvium was encountered at BH-4. This material consists of predominantly medium dense to dense, sandy gravel and cobbles up to ±8 inches in diameter. N values of 23 and 31 were recorded in the upper 7 feet were of BH-4. The possible alluvium is underlain by alluvial sandy gravel and cobbles up to ±4 inches in diameter. N-values and drilling action indicate this unit is dense to a depth of ±12 feet, very dense from ±12 to 17 feet, and medium dense from ±17 to 20 feet. N values in the alluvium below ±7 feet ranged from 19 to practical sampling refusal. Significant loss of drilling fluid was experienced from ±1.5 to 20.5 feet, likely due to the presence of open-graded gravels with cobbles.

Grey, extremely weak (R0) grading to very weak (R1) siltstone was encountered at ±22 feet (±El. 428.0) and extended to ±25.3 feet, the limits of our exploration. The siltstone ranged from fresh to slightly weathered.

We estimate the pipe invert at BH-4 will extend ±16 feet below the ground surface (±El. 434). Therefore, the pipe in this area is expected to be bedded in predominantly medium dense to very dense sandy gravel.

BH-5

BH-5 was drilled on the gravel-surfaced, west shoulder of Hwy 225. The boring was completed ±105 feet north of the access road to the Franklin Industrial Park, ±20 feet from the fogline. We estimate the ground surface at BH-5 lies at ±El. 448.5.

Approximately 5 feet of fill was encountered in BH-5. The fill consists of medium dense gravel with trace silt followed by stiff silt with some sand. The fill is underlain by very dense grading to medium dense sandy gravel with trace silt to ±18.8 feet. The drilling action indicated the presence of scattered cobbles up to ±6 inches in diameter below ±6 feet. Ground water was observed at ±15 feet and heave was observed at ±17.5 feet, likely due to the ground water.

Grey, extremely weak (R0), slightly weathered siltstone (Eugene Formation) was encountered from ±18.8 to 20.3 feet, the maximum depth of the boring.

We estimate the pipe invert at BH-5 will extend ±12 feet below the ground surface (±El. 436.5). Based on the profile at BH-5, we anticipate the sewer pipe will be bedded in predominantly medium dense to very dense sandy gravel in this area.

BH-6

BH-6 was drilled in a grassy field near the south end of the planned sewer alignment. The boring was completed on the west side of Hwy 225, ±640 feet from the entrance to the Franklin Industrial Park. We estimate the ground surface at BH-6 lies at ±El. 450.5.

Fill consisting of predominantly soft to medium stiff silt with trace sand was encountered in BH-6 to a depth of ±5 feet. The fill is followed by medium stiff grading to stiff, low plasticity silt with trace sand to ±12.5 feet. The silt is underlain by medium dense, sandy gravel with trace silt that extends to ±15 feet (±El. 435.5), the bedrock surface.

Grey, extremely weak to very weak (R0 to R1), slightly weathered sandstone was encountered from ±15 to 20 feet (the limits of exploration).

The pipe invert will extend ±12 feet below the ground surface (±El. 438.5) in the vicinity of BH-6. Therefore, we anticipate the pipe will be bedded in either medium stiff silt or medium dense sandy gravel along the southern segment.

A piezometer was installed in BH-6 with a slotted section from ±10 to 15 feet. Ground water levels measured to date in the piezometer are provided below.

Ground Water

Mud-rotary drilling methods were used to advance BH-1, BH-2, BH-4 and BH-6, which precluded ground water observations at the time of drilling. In BH-3 and BH-5, hollow-stem auger drilling was used, and observed ground water levels at the time of drilling are summarized in Table 1.

Piezometers were installed in BH-2, BH-4 and BH-6 to allow periodic measurement of ground water levels. The piezometer measurements recorded to date are also summarized in Table 1. The water level elevations were based on estimated ground surface elevations at the borings.

Table 1. Summary of Piezometric Data

Borehole	Date	Water Depth (feet)	Water Elevation (feet)
BH-2	10/11/13	7.90	432.60
	10/16/13	7.70	432.80
	10/23/13	8.50	432.00
	10/29/13	8.65	431.85
	11/05/13	8.80	431.70
	11/07/13	8.60	431.90
BH-3	10/10/13	17.50	431.30
BH-4	11/05/13	18.40	431.60
	11/07/13	18.40	431.60
BH-5	10/10/13	15.00	433.50
BH-6	10/11/13	14.40	436.10
	10/16/13	14.80	435.70
	10/23/13	14.50	436.00
	10/29/13	14.20	436.30
	11/05/13	14.15	436.35
	11/07/13	13.90	436.60

Notes:
1. Piezometric water depths are referenced to the surface of the Morris monument.
2. Water surface elevations were estimated from borehole surface elevations provided by MSA. The elevations are reported to two decimals for comparison purposes only, and do not reflect the accuracy of the estimates. It should be assumed that water level elevations are accurate to ±0.5 feet.

Our piezometer measurements to date suggest the ground water along the alignment varies from ±7 to18 feet below the ground surface with a corresponding elevation range of ±El. 431.3 to ±El. 436.3. The water level in BH-2 has been dropping steadily since the piezometer was installed and the water on the water level meter appears muddy, suggesting the water was trapped in the bottom of the piezometer (i.e., remained in the piezometer after bailing for our initial

measurement) rather than representing the actual water table. Therefore, we assume ground water lies below at least 9 feet (the bottom of the piezometer standpipe) at this location. Future readings will confirm whether this assumption is correct.

Ground water levels currently range from 2 to 3 feet above the planned pipe invert to ±4 feet below the invert. We anticipate the ground water level will fluctuate seasonally, and may rise significantly above invert elevations during the winter and spring.

Previous field explorations by other consultants (GeoDesign, 2003) reported ground water at depths of ±10 to 19 feet below ground surface during June 2003. These depths correspond to ±El. 424 to EL. 430 (using the consultant's datum). It should be noted that these reported ground water depths represent summer conditions.

Contractors should anticipate the need for dewatering during trenching, excavation or shoring. The City or FEI will measure the water levels in the piezometers prior to the bid date and provide that information to contractors so they can evaluate potential ground water impacts and plan their dewatering methods.

Summary

A summary of elevations of key strata and anticipated conditions at the pipe invert is provided in Table 2.

Table 2. Summary of Anticipated Subsurface Conditions

Boring	Surface Elevation (ft)	Bedrock Elevation (ft)	Estimated Invert Elevation (ft)	Anticipated Material at Invert	Latest Ground Water Elevation (ft)
BH-1	446.5	426.0	430.0	Medium dense to very dense sandy GRAVEL	n/a
BH-2	440.5	423.5	425.5	R0 to R1 SILTSTONE to silty SANDSTONE	431.9
BH-3	449.0	429.0	432.0	Dense sandy GRAVEL	431.3
BH-4	450.0	428.0	434.0	Medium dense to very dense sandy GRAVEL	431.6
BH-5	448.5	430.0	436.5	Medium dense to very dense sandy GRAVEL	433.5
BH-6	450.5	435.5	438.5	Stiff SILT or medium dense sandy GRAVEL	436.5

LABORATORY TESTING

The exploratory drilling encountered predominantly granular soils over bedrock. At many locations sample recovery with a split-spoon sampler was limited. Therefore, the laboratory work was limited to natural water contents and Atterberg limits tests on selected samples of fine-grained soils. Results of these tests are summarized in Table 1C (Appendix C). Unconfined compression tests were also completed on two bedrock samples to estimate the rock's strength. Results of these tests are summarized in Table 2C (Appendix C).

DISCUSSION OF KEY GEOTECHNICAL ISSUES

The following sections provide a discussion of geotechnical issues associated with sewer line construction. Contractors bidding on the project should be provided a copy of this report and should be familiar with the boring logs, the discussion of subsurface conditions, and the limitations of this information. Soil specimens will be available for inspection by contractors at FEI's office prior to bidding. Contractors should also make their own site inspection to familiarize themselves with existing utilities, roads, access, conflicts, etc.

Anticipated Subsurface Conditions

The exploratory borings indicate the typical subsurface profile along the selected alignment consists of the following:

- Pavement (where present) and/or surficial fill
- Fine-grained alluvium (silt and clayey silt)
- Coarse-grained alluvium (sandy gravels and cobbles)
- Bedrock (siltstone and silty sandstone)

The pavement and/or surficial fill typically extend to a depth of ±2 to 5 feet. The fill ranges from soft to stiff silt (in BH-1 and BH-6) to medium dense to dense sandy gravel (in BH-2, BH-3 and BH-4). The fill in BH-5 consisted of a combination of silty, sand and gravel.

A ±7.5-foot thick layer of medium stiff silt (alluvium) was encountered in BH-6 below the surficial fill. We did not encounter a similar stratum in the other borings. However, previous explorations by others (GeoDesign, 2003) between Bus. Hwy 126 and 19th Avenue reported a silty fill to depths of ±4.5 to 9 feet. Therefore, contractors should expect to encounter fine-grained soils (undocumented fill or native alluvium) to a depth of ±5 to 10 feet along a significant portion of the alignment.

Coarse-grained alluvium is the predominant material beneath the selected alignment. The alluvium typically consists of medium dense to very dense, sandy gravel. Scattered cobbles and boulders were encountered during the field exploration and should be anticipated within this stratum. We anticipate most of the planned sewer line will terminate in gravel. However, it is possible the pipe will terminate in silt near the south end of the project.

All of the exploratory borings terminated in bedrock. The bedrock typically consists of grey, extremely soft to very soft (R0 to R1), slightly weathered to fresh siltstone and very weak to weak (R1 to R2), slightly weathered silty sandstone. The siltstone hardness was previously report to be between R1 and R2 (GeoDesign, 2003). Laboratory tests on two rock specimens indicated unconfined compressive strengths of 866 psi and 1100 psi. These strengths are equivalent to R1 to R2 designations. Therefore, contractors bidding on the project should plan to use equipment capable of excavating R2 siltstone and sandstone.

The surface of the bedrock was encountered at depths ranging from ±14.0 feet (±El. 426.5 in BH-2) to 22.0 feet (±El. 428.0 in BH-4). Previous explorations by other consultants near BH-1 suggest bedrock near the intersection of Franklin Blvd. and 19th Avenue may be encountered at ±13.5 feet. As discussed above, the pipe invert may extend to or several feet into bedrock at some locations.

It should be understood that subsurface conditions are known only at the widely-spaced boring locations, and the elevation of the sewer invert varies along the selected alignment. Therefore, variability of the soil and rock conditions and elevations should be anticipated along the alignment.

Seepage and Dewatering

Ground water levels observed during our field explorations and in piezometers are summarized in Table 1 (above). The data to date indicates ground water levels are currently well above the planned sewer line invert elevation. We anticipate ground water levels will vary seasonally, with higher water levels in the winter and spring and lower levels in the summer. It should also be assumed that perched water can develop above any fine-grained soil (fill or alluvium) during the wet winter and spring. Perched water may also be present in the base rock in the early summer.

We anticipate ground water will be present in the gravel stratum year-round. Therefore, the contractor should anticipate the need for dewatering even in the summer. Due to the high permeability of the gravels, significant seepage should be anticipated. Ground water levels should be measured in the piezometers prior to bids and prior to construction so the contractor can plan their dewatering effort accordingly.

Trench Wall Stability and Shoring

Sewer line trenching is expected to encounter several feet of variable fill followed by predominantly sandy gravel. Bedrock is expected at the bottom of some portions of the alignment as discussed above.

The gravels caved repeatedly in several of the borings. Because trenching will require excavation through gravel, the risk of trench sidewall caving is expected to be high along the entire alignment. The risk of caving or sloughing is significantly higher where seepage is encountered in the gravels (i.e., below the water table). Therefore, it is important to confirm ground water levels prior to construction and to plan for dewatering.

We recommend the contractor assume all trenched soils correspond to an OR OSHA Soil Type C. For Type C soil, OSHA recommends a maximum temporary cut slope of 1½:1 (H:V) for trenches less than 20 feet deep. However, the gravels are expected to be highly permeable and seepage could destabilize even those slopes allowed by OSHA. Therefore, open cuts may not be practical if the trenches cannot be adequately dewatered. As a result, we recommend the contractors assume shoring will be required for the entire sewer line alignment.

Sidewall instability may extend to and undermine curbs, sidewalks or driveways. Some damage may be unavoidable, depending on the trench setback from settlement-sensitive improvements. Wherever persistent caving occurs, the contractors should plan to provide shoring and dewatering to reduce the risk of sloughing and sidewall caving and to protect workers. Shoring may also be required to prevent undermining existing underground utilities.

A lateral earth pressure diagram for the design of temporary shoring is shown on Figure 3A (Appendix A). For simplicity, we modeled the anticipated profile as a uniform cohesionless material. The apparent earth pressure distribution shown on Figure 3A assumes a composite moist unit weight of 120 pcf and internal friction angle (Φ') of 32 degrees. Bouyant unit weight should be used below the ground water (to be confirmed prior to construction). It is possible the contractor's equipment will surcharge the edge of the excavation. Since the surcharge load is unknown at this time, the lateral earth pressure resulting from equipment is shown on Figure 3A as a uniform surcharge pressure, q_s, multiplied by an active earth pressure coefficient (k_a) of 0.31.

The means and methods for shoring are solely the responsibility of the contractor and should be designed by a qualified engineer. Contractors should adjust their shoring design, as needed, based on the actual soil and ground water conditions encountered in the field. The contractor's trenching methods should be reviewed immediately in the event sewer line construction results in unexpected caving, or damage or distress to adjacent hardscapes, structures or utilities.

Pipe Bedding and Bottom Stabilization

All disturbed, loose soil should be removed from the bottom of the trench prior to backfilling. We recommend providing a leveling course of at least 6 inches of compacted, 1 or ¾-inch minus, well-graded, clean, crushed rock or crushed gravel beneath the sewer line. If the bottom of the excavation becomes unstable due to dewatering, excessive ground water or abundant fines in the gravel, the contractor may need to use 3-inch minus, open-graded, clean, crushed rock for bottom stabilization.

Bore-and-Jack Undercrossing

It is our understanding that the currently planned alignment will allow conventional trenching under the UPRR overcrossing. Therefore, no bore-and-jack construction is anticipated.

Risks from Trenching and Construction Vibrations

The selected alignment runs through predominantly commercial/industrial areas with only a few single-family residences. The commercial and industrial buildings are typically set well back from Hwy 225.

There are several mobile home and RV parks with units relatively close to the street. Depending on the final alignment determination, trenching in many areas may be close to other hardscapes such as curbs, sidewalks, and driveways.

Adequate compaction of trench backfill and new asphaltic concrete typically requires vibratory compaction equipment (e.g., hoe-packs and self-propelled rollers). It is likely the residents in the mobile homes or trailers and employees at commercial buildings with limited set back will feel vibrations from the compaction equipment. Construction vibrations can be felt by humans at much lower levels than that required to actually damage residences. However, felt vibrations can often lead to perceptions of construction-related damage and claims. Options to reduce the likelihood of claims include pre-construction surveys of the condition of adjacent commercial buildings and homes, pre-construction contact or meetings with the affected residents to explain the project and the expected noise and vibration levels, and providing quick responses during construction to address any complaints or concerns. At locations where claims are anticipated, ground vibrations can be measured to document the vibration levels.

Liquefaction Hazard

The field explorations suggest the sewer line will be bedded in bedrock or dense to very dense, sandy gravel underlain by relatively shallow bedrock. These materials are not susceptible to liquefaction. Therefore, liquefaction is not a design concern.

DESIGN REVIEW/CONSTRUCTION OBSERVATION/TESTING

We should be provided the opportunity to review all drawings and specifications that pertain to design and construction of the proposed sewer line. Site preparation will require field confirmation of the depth to ground water. Mitigation of any ground water infiltration, caving sidewalls or soft trench bottom conditions will also require engineering review and judgment. That judgment should be provided by one of our representatives. Frequent field density tests should be run on all fill. We recommend that we be retained to provide the necessary construction observations.

VARIATION OF SUBSURFACE CONDITIONS, USE OF THIS REPORT AND WARRANTY

The analysis, conclusions and recommendations contained herein are based on the assumption that the soil profiles encountered in the borings and ground water levels recorded in the borings and piezometers are representative of the site conditions along the proposed alignment. The above recommendations assume we will have the opportunity to review final drawings and be present during construction to confirm the assumed soil and rock conditions. No changes in the enclosed

recommendations should be made without our approval. We will assume no responsibility or liability for any engineering judgment, inspection or testing performed by others.

This report was prepared for the exclusive use of Murray, Smith & Associates and other design consultants for the Franklin/McVay Sanitary Sewer Extension project in Springfield, Oregon. Information contained herein should not be used for other sites or for unanticipated construction without our written consent. This report is intended for planning and design purposes. It should be clearly understood that the subsurface conditions are well known only at the boring locations. The soil and rock conditions and ground water levels vary along the length of the alignment. Contractors using this information to estimate construction quantities or costs do so at their own risk. Contractors are encouraged to measure ground water levels in the piezometers prior to preparing bids and beginning construction. FEI should be contacted to coordinate those measurements.

Our services do not include any survey or assessment of potential surface contamination or contamination of the soil or ground water by hazardous or toxic materials. We assume that those services, if needed, have been completed by others.

Our work was done in accordance with generally accepted soil and foundation engineering practices. No other warranty, expressed or implied, is made.

REFERENCES

Hladky, F. R., and McCaslin, G. R., 2006; Preliminary Geologic Map of the Springfield 7.5' Quadrangle, Lane County, Oregon, Oregon Department of Mineral Industries, Open-File Report O-06-07, p. 31.

Personius, S. F., Dart, R. L., Bradley, L.-A., and Haller, K. M., 2003; Map of Quaternary Faults and Folds in Oregon, U.S. Geological Survey, Open-File Report 03-095, v.1.1, Scale: 1:750,000.

USGS, 2006; Quaternary Fault and Fold Database for the United States: accessed November 2009, from USGS website, http://earthquake.usgs.gov/regional/qfaults/or/index.php.

Report of Geotechnical Engineering Services, Glenwood Trunk Sewer, prepared for EGR& Associates, Inc., by GeoDesign, Inc., December 1, 2003.

Appendix A

Figures

Professional
Geotechnical
Services

Foundation Engineering, Inc.

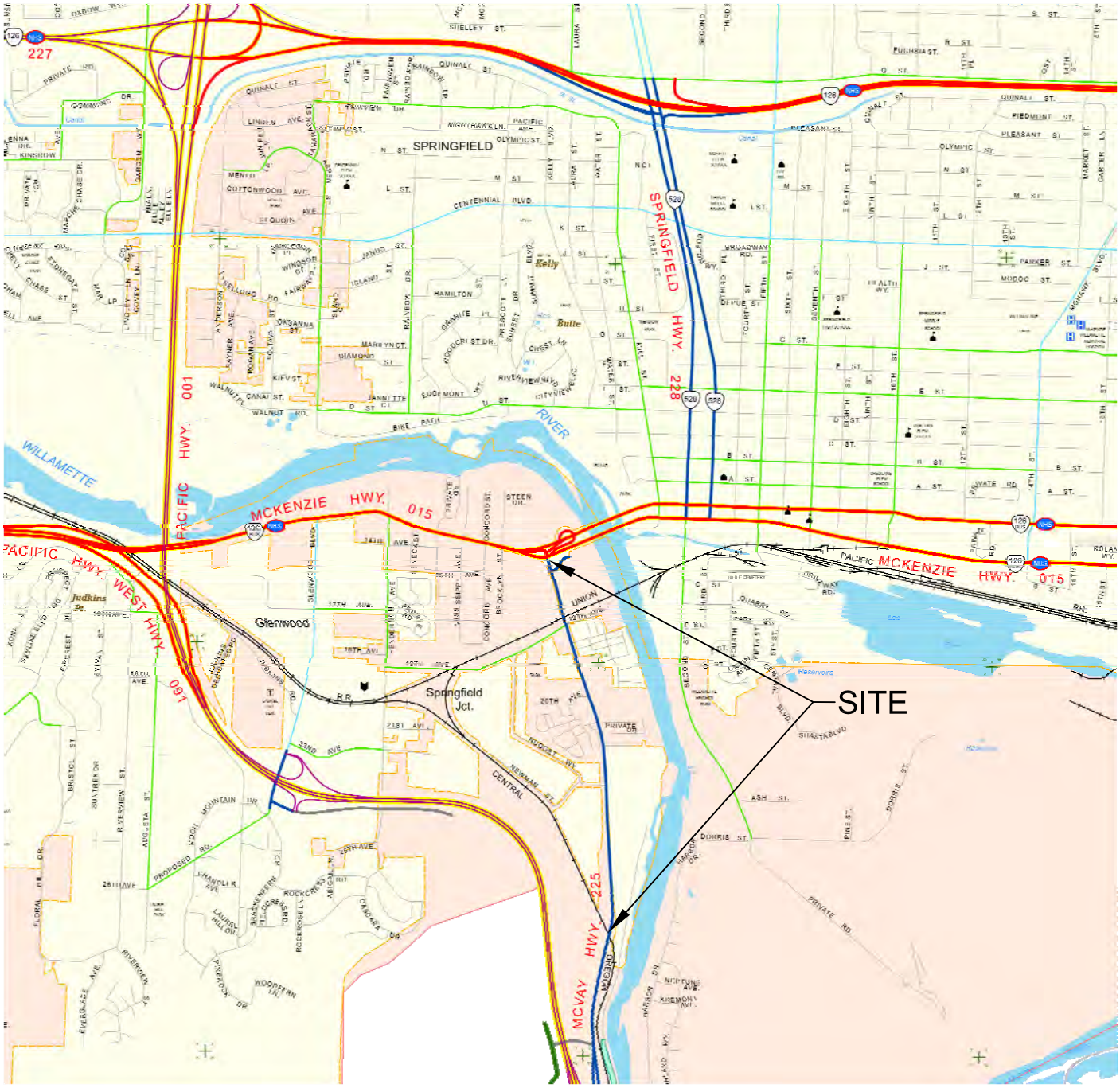

SCALE: 1" = 2000'

0 500' 1000' 2000'

DATE OCT 2013
DWN. mdm
APPR.
REVIS.
PROJECT NO.
2131052

FOUNDATION ENGINEERING INC.
PROFESSIONAL GEOTECHNICAL SERVICES
820 NW CORNELL AVENUE
CORVALLIS, OR 97330-4517
BUS. (541) 757-7645 FAX (541) 757-7650

VICINITY MAP
FRANKLIN/MCVAY
SANITARY SEWER EXTENSION
SPRINGFIELD, OREGON

FIGURE NO.
1A

FILE NAME: FIG 1A

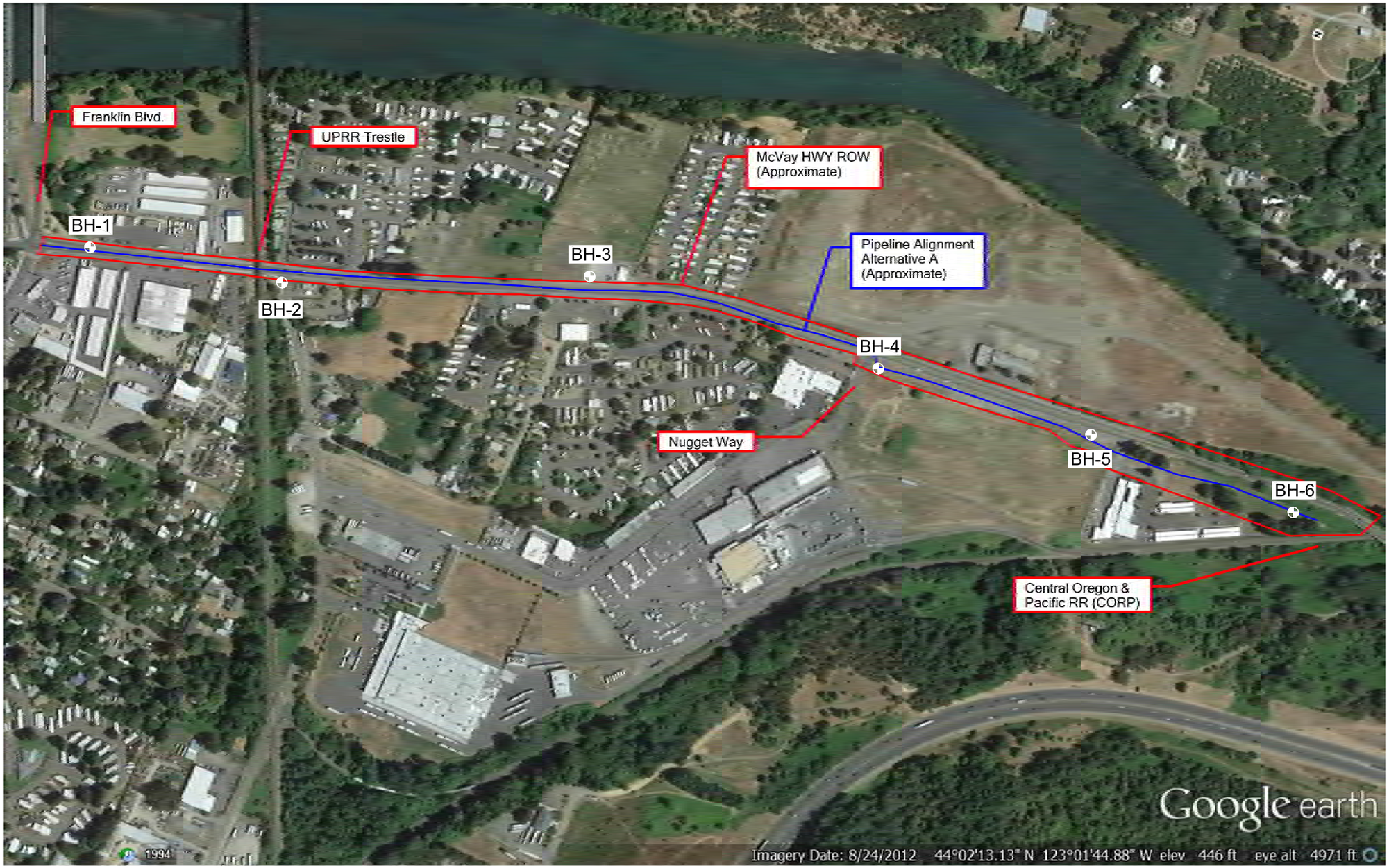

SCALE: 1' = 400'

0 100' 200' 400'

NOTES:
1. BORING LOCATIONS ARE APPROXIMATE ONLY.
2. SEE REPORT FOR A DISCUSSION OF SUBSURFACE CONDITIONS.
3. BASE MAP WAS PROVIDED BY MURRAY, SMITH & ASSOCIATES, INC.

FOUNDATION ENGINEERING INC.
PROFESSIONAL GEOTECHNICAL SERVICES
820 NW CORNELL AVENUE
CORVALLIS, OR 97330-4517
BUS. (541) 757-7645 FAX (541) 757-7650

DATE OCT 2013
DWN. mdm
APPR.
REVIS.
PROJECT NO. 2131052

PLANNED SEWER ALIGNMENT
AND BORING LOCATIONS
FRANKLIN/MCVAY SANITARY SEWER EXTENSION
SPRINGFIELD, OREGON

FIGURE NO. 2A

FILE NAME:FIG 2A

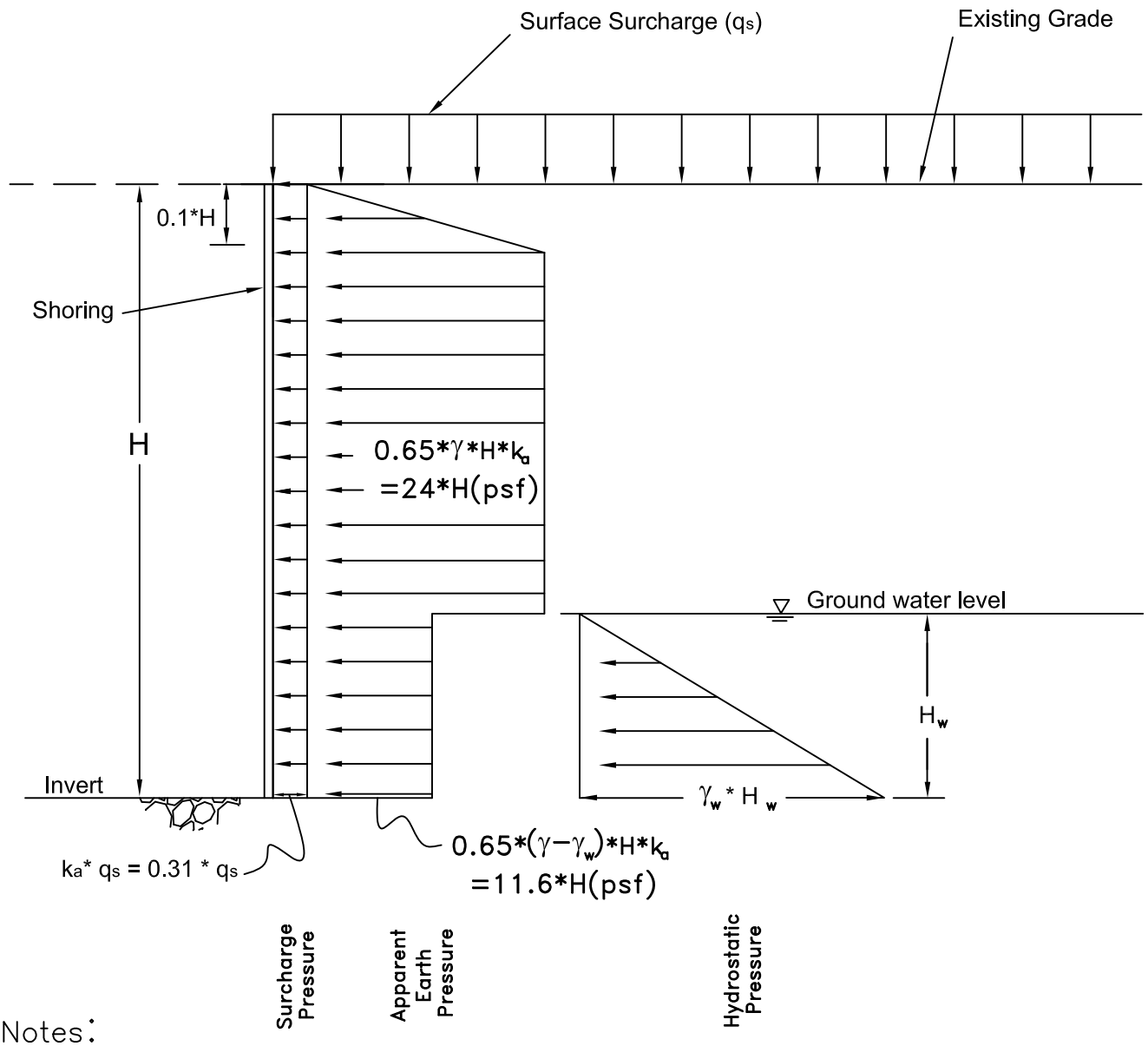

Notes:

1. Design pressures should be calculated using a moist unit weight of 120 pcf above the ground water level and a bouyant unit weight of 57.6 pcf below the ground water level. An active earth pressure coefficient (k_a) of 0.31 was calculated using an effective friction angle (ϕ') of 32 degrees.

2. The ground water level shown above is conceptual only. Shoring design should be based on the actual water levels measured at the time of construction.

DATE OCT 2013
DWN. mdm
APPR.
REVIS.
PROJECT NO.
2131052

FOUNDATION ENGINEERING INC.
PROFESSIONAL GEOTECHNICAL SERVICES
820 NW CORNELL AVENUE
CORVALLIS, OR 97330-4517
BUS. (541) 757-7645 FAX (541) 757-7650

SHORING PRESSURES
PREDOMINANTLY GRANULAR SOIL PROFILE
FRANKLIN/MCVAY SANITARY SEWER EXTENSION
SPRINGFIELD, OREGON

FIGURE NO.
3A

FILE NAME: FIGURE 3A

Appendix B

Boring Logs

Professional
Geotechnical
Services

Foundation Engineering, Inc.

DISTINCTION BETWEEN FIELD LOGS AND FINAL LOGS

A field log is prepared for each boring or test pit by our field representative. The log contains information concerning sampling depths and the presence of various materials such as gravel, cobbles, and fill, and observations of ground water. It also contains our interpretation of the soil conditions between samples. The final logs presented in this report represent our interpretation of the contents of the field logs and the results of the laboratory examinations and tests. Our recommendations are based on the contents of the final logs and the information contained therein and not on the field logs.

VARIATION IN SOILS BETWEEN TEST PITS AND BORINGS

The final log and related information depict subsurface conditions only at the specific location and on the date indicated. Those using the information contained herein should be aware that soil conditions at other locations or on other dates may differ. Actual foundation or subgrade conditions should be confirmed by us during construction.

TRANSITION BETWEEN SOIL OR ROCK TYPES

The lines designating the interface between soil, fill or rock on the final logs and on subsurface profiles presented in the report are determined by interpolation and are therefore approximate. The transition between the materials may be abrupt or gradual. Only at boring or test pit locations should profiles be considered as reasonably accurate and then only to the degree implied by the notes thereon.

SAMPLE OR TEST SYMBOLS

SH-3-4

- Sample Number
- Boring or Test Pit Number
- Sample Type

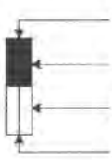

- Top of Sample Attempt
- Recovered Portion
- Unrecovered Portion (large circle indicates no recovery)
- Bottom of Sample Attempt

S – Grab Samples
SS – Standard Penetration Test Sample (split-spoon)
SH – Thin-walled Shelby Tube Sample
C – Core Sample
CS – Continuous Sample

▲ Standard Penetration Test Resistance equals the number of blows a 140 lb. weight falling 30 in. is required to drive a standard split-spoon sampler 1 ft. Practical refusal is equal to 50 or more blows per 6 in. of sampler penetration.

● Water Content (%).

UNIFIED SOIL CLASSIFICATION SYMBOLS

G – Gravel	W – Well Graded
S – Sand	P – Poorly Graded
M – Silt	L – Low Plasticity
C – Clay	H – High Plasticity
Pt – Peat	O – Organic

FIELD SHEAR STRENGTH TEST

Shear strength measurements on test pit side walls, blocks of soil or Shelby tube samples are typically made with Torvane or pocket penetrometer devices.

TYPICAL SOIL/ROCK SYMBOLS

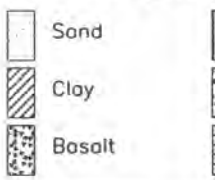

Sand
Silt
Clay
Gravel
Basalt
Siltstone

WATER TABLE

▼ Water Table Location

(1/31/00) Date of Measurement

Piezometer Tip Location (if used)

FOUNDATION ENGINEERING INC.
PROFESSIONAL GEOTECHNICAL SERVICES
820 NW CORNELL AVE
CORVALLIS, OR 97330-4517
BUS. (541) 757-7645 FAX (541) 757-7650

SYMBOL KEY
BORING AND TEST PIT LOGS

Explanation of Common Terms Used in Soil Descriptions

Field Identification	Cohesive Soils			Granular Soils	
	SPT	S_u^* (tsf)	Term	SPT	Term
Easily penetrated several inches by fist.	0 – 1	< 0.125	Very Soft	0 – 4	Very Loose
Easily penetrated several inches by thumb.	2 – 4	0.125–0.25	Soft	5 – 10	Loose
Can be penetrated several inches by thumb with moderate effort.	5 – 8	0.25 – 0.50	Medium Stiff (Firm)	11 – 30	Medium Dense
Readily indented by thumb but penetrated only with great effort.	9 – 15	0.50 – 1.0	Stiff	31 – 50	Dense
Readily indented by thumbnail.	16 – 30	1.0 – 2.0	Very Stiff	> 50	Very Dense
Indented with difficulty by thumbnail.	31 – 60	> 2.0	Hard		

* Undrained shear strength

Term	Soil Moisture Field Description
Dry	Absence of moisture. Dusty. Dry to the touch.
Damp	Soil has moisture. Cohesive soils are below plastic limit and usually moldable.
Moist	Grains appear darkened, but no visible water. Silt/clay will clump. Sand will bulk. Soils are often at or near plastic limit.
Wet	Visible water on larger grain surfaces. Sand and cohesionless silt exhibit dilatancy. Cohesive silt/clay can be readily remolded. Soil leaves wetness on the hand when squeezed. "Wet" indicates that the soil is wetter than the optimum moisture content and above the plastic limit.

Term	PI	Plasticity Field Test
Nonplastic	0 – 3	Cannot be rolled into a thread.
Low Plasticity	3 – 15	Can be rolled into a thread with some difficulty.
Medium Plasticity	15 – 30	Easily rolled into thread.
High Plasticity	> 30	Easily rolled and rerolled into thread.

Term	Soil Structure Criteria
Stratified	Alternating layers at least 1 inch thick – describe variation.
Laminated	Alternating layers at less than 1 inch thick – describe variation.
Fissured	Contains shears and partings along planes of weakness.
Slickensides	Partings appear glossy or striated.
Blocky	Breaks into lumps – crumbly.
Lensed	Contains pockets of different soils – describe variation.

Term	Soil Cementation Criteria
Weak	Breaks under light finger pressure.
Moderate	Breaks under hard finger pressure.
Strong	Will not break with finger pressure.

FOUNDATION ENGINEERING INC.
PROFESSIONAL GEOTECHNICAL SERVICES
820 NW CORNELL AVE.
CORVALLIS, OR 97330-4517
BUS. (541) 757-7645 FAX (541) 757-7850

COMMON TERMS
SOIL DESCRIPTIONS

Explanation of Common Terms Used in Rock Descriptions

Field Identification		UCS (psi)	UCS (MPa)	Strength (Hardness)
Indented by thumbnail.	R0	< 100	0.25–1.0	Extremely Weak (Extremely Soft)
Crumbles under firm blows with geological hammer, can be peeled by a pocket knife.	R1	100–1000	1.0–5.0	Very Weak (Very Soft)
Can be peeled by a pocket knife with difficulty, shallow indentations made by firm blow with geological hammer.	R2	1000–4000	5.0–25	Weak (Soft)
Cannot be scraped or peeled with a pocket knife, specimen can be fractured with a single blow of geological hammer.	R3	4000–8000	25–50	Medium Strong (Medium Hard)
Specimen requires more than one blow of geological hammer to fracture it.	R4	8000–16000	50–100	Strong (Hard)
Specimen requires many blows of geological hammer to fracture it.	R5	16000–36000	100–250	Very Strong (Very Hard)
Specimen can only be chipped with geological hammer.	R6	> 36000	> 250	Extremely Strong (Extremely Hard)

Term	Weathering Field Identification
Fresh	Crystals are bright. Discontinuities may show some minor surface staining. No discoloration in rock fabric.
Slightly Weathered	Rock mass is generally fresh. Discontinuities are stained and may contain clay. Some discoloration in rock fabric.
Moderately Weathered	Significant portions of rock show discoloration and weathering effects. Crystals are dull and show visible chemical alteration. Discontinuities are stained and may contain secondary mineral deposits.
Highly Weathered	Rock can be excavated with geologist's pick. All dicontinuities exhibit secondary mineralization. Complete discoloration of rock fabric. Surface of core is friable and usually pitted due to washing out of highly altered minerals by drilling water.
Decomposed	Rock mass is completely decomposed. Original rock "fabric" may be evident. May be reduced to soil with hand pressure.

Spacing (meters)	Spacing (feet)	Spacing Term	Bedding/Foliation
< 0.06	< 2 in.	Very Close	Very Thin
0.06 – 0.30	2 in. – 1 ft.	Close	Thin
0.30 – 0.90	1 ft. – 3 ft.	Moderately Close	Medium
0.90 – 3.0	3 ft. – 10 ft.	Wide	Thick
> 3.0	> 10 ft.	Very Wide	Very Thick (Massive)

Vesicle Term	Volume
Some	3 – 20%
Highly	20 – 50%
Scoria	> 50%

Stratification Term	Description
Lamination	<0.39 in. thick beds
Fissile	Preferred break along laminations
Parting	Preferred break direction
Foliation	Metamorphic layering of minerals

RQD %	Designation	RQD %	Designation
0 – 25	Very Poor	75 – 90	Good
25 – 50	Poor	90 – 100	Excellent
50 – 75	Fair		

Rock Quality Designation (RQD) is the percent of a core run with intact lengths greater than 4.0 in. excluding breaks caused by drilling.

FOUNDATION ENGINEERING INC.
PROFESSIONAL GEOTECHNICAL SERVICES
820 NW CORNELL AVE
CORVALLIS, OR 97330-4517
BUS. (541) 757-7845 FAX (541) 757-7650

COMMON TERMS
ROCK DESCRIPTIONS

Depth Feet	Soil and Rock Description and Comments	Log	Elev. Depth (446.5)	Samples	SPT, N-Value / Recovery / Moisture, % / RQD., % (0–50–100)	Installations/ Water Table
	ASPHALTIC CONCRETE, (±10 inches).		0.0			Capped with AC cold patch and gravel
1	Medium dense sandy GRAVEL; grey-brown, moist, fine to coarse sand, fine to coarse, angular to subrounded gravel, (base rock).		445.7 / 0.8			
2			444.5 / 2.0			
3	Medium stiff SILT, some gravel, trace sand; brown, moist, low plasticity, fine to medium sand, fine to coarse, angular to subrounded gravel, (fill).			SS-1-1	6	Backfilled with bentonite chips
4						
5				SS-1-2	6	
6						
7	Cobble (±10-inch diameter) encountered at ±6.5 feet.		439.0 / 7.5			
8	Loose gravelly SAND, trace silt; grey-brown, moist, low plasticity silt, fine, subrounded to rounded gravel, (alluvium).			SS-1-3	6	
9	Very dense sandy GRAVEL, trace silt; brown, moist, low plasticity, fine to coarse sand, fine to coarse, subrounded to rounded gravel, (alluvium).		437.5 / 9.0			
10				SS-1-4	74/11"	
11						
12						
13	Lost drilling fluid circulation (±300 gallons) from ±12.5 to 20.5 feet.			SS-1-5	69	
14						
15	Becomes dense from ±15 to 17.5 feet.			SS-1-6	49	
16						
17						
18	Becomes medium dense at ±17.5 feet.			SS-1-7	17	
19						
20			426.0			
21	Extremely weak (R0) SILTSTONE; grey, slightly weathered to fresh, (Eugene Formation).		20.5			
22						
			423.7 / 22.8	SS-1-8	50/1st 4"	
	BOTTOM OF BORING					

Project No.: 2131052

Surface Elevation: 446.5 feet (Approx.)

Date of Boring: October 9, 2013

Boring Log: BH-1

Franklin-McVay Sewer

Springfield, Oregon

Foundation Engineering, Inc.

Depth Feet	Soil and Rock Description and Comments	Log	Elev. Depth 440.5	Samples	▲ SPT, N-Value ● Moisture, % ▨ Recovery ▦ RQD., % (0 – 50 – 100)	Installations/ Water Table
1 2 3 4	Dense GRAVEL, some sand, trace silt; grey-brown, moist, low plasticity silt, fine to coarse sand, fine to coarse, angular to subrounded gravel, (fill). Lost drilling fluid circulation (±75 gallons) from ±1 to 5 feet. Boulder (±2 feet diameter) encountered at ±1.5 feet.		0.0	SS-2-1	34	12-inch Morris monument set in concrete Bentonite chips Colorado silica sand
5 6 7 8 9	Dense sandy GRAVEL, trace silt; brown, moist, low plasticity silt, fine to coarse sand, fine to coarse, subangular to subrounded gravel, (alluvium). Becomes medium dense at ±7.5 feet.		435.5 5.0	SS-2-2 SS-2-3	37 13	0.010 machine slot screen ±1-inch I.D. PVC Ground water level (10/11/13)
10 11 12 13				SS-2-4 SS-2-5	43 36	
14 15 16	Extremely weak (R0) SILTSTONE; grey, moderately weathered, (Eugene Formation).		426.5 14.0	SS-2-6	50/1st 4"	Caved in with native material
17 18 19 20	Very weak (R1) silty SANDSTONE; grey, slightly weathered, close to moderately close joints, joints are irregular, rough, open, medium bedding, fine to medium sand, (Eugene Formation). Vertical calcite vein from ±17.6 to 20.1 feet. Shells at ±18 and 20 feet.		423.5 17.0	CS-2-1		
21 22	Very weak (R1) SILTSTONE; grey, fresh, moderately close joints, joints are planar to irregular, smooth to rough, closed, very thin bedding, calcite mineralization, (Eugene Formation).		419.9 20.6 418.5 22.0			
	BOTTOM OF BORING					

Project No.: 2131052

Surface Elevation: 440.5 feet (Approx.)

Date of Boring: October 9, 2013

Boring Log: BH-2

Franklin-McVay Sewer

Springfield, Oregon

Foundation Engineering, Inc.

Depth Feet	Soil and Rock Description and Comments	Log	Elev. Depth (449)	Samples	SPT, N-Value / Recovery (0–50–100)	Moisture, % / RQD., %	Installations/ Water Table
1, 2	Medium dense sandy GRAVEL, trace silt; grey-brown, moist, low plasticity silt, fine to coarse sand, fine to coarse, subrounded to rounded gravel, (fill).		0.0				Capped with gravel
3, 4	Medium dense GRAVEL, some silt, trace sand; grey-brown, damp, low plasticity silt, fine to coarse sand, fine to coarse, subrounded to rounded gravel, (fill).		446.5 2.5	SS-3-1	17		Backfilled with bentonite chips
5, 6, 7	Medium dense sandy GRAVEL, trace silt, scattered cobbles; grey-brown, moist, low plasticity silt, fine to coarse sand, fine to coarse, subrounded to rounded gravel, cobbles up to ±4 inches in diameter, (alluvium).		445.0 4.0	SS-3-2	16		
8, 9	Becomes loose at ±7.5 feet.			SS-3-3	8		
10, 11, 12	Becomes dense at ±10 feet.			SS-3-4	43		
13, 14	Becomes wet below ±12.5 feet.			SS-3-5	19		
15, 16, 17	Becomes dense below ±15 feet.			SS-3-6	45		
18, 19				SS-3-7	45		Ground water encountered during drilling
20, 21, 22, 23, 24	Very weak to weak (R1 to R2) silty SANDSTONE; grey, slightly weathered, moderately close to close joints, joints are planar to irregular, smooth to rough, closed, medium bedding, fine sand, (Eugene Formation). Calcite vein at ±21.4 feet. Shell at ±22.4 feet.		429.0 20.0	SS-3-8	50/3"		
25	BOTTOM OF BORING		424.0 25.0				

Project No.: 2131052

Surface Elevation: 449.0 feet (Approx.)

Date of Boring: October 10, 2013

Boring Log: BH-3

Franklin-McVay Sewer

Springfield, Oregon

Foundation Engineering, Inc.

Depth Feet	Soil and Rock Description and Comments	Log	Elev. Depth (450)	Samples	SPT, N-Value / Recovery (0–50–100)	Moisture, % / RQD., %	Installations/ Water Table
1, 2, 3, 4, 5, 6, 7	Medium dense to dense sandy GRAVEL and COBBLES, trace silt; grey-brown, moist to wet, low plasticity silt, fine to coarse sand, fine to coarse, subrounded to rounded gravel and cobbles up to ±8 inches in diameter, (possible alluvium). Lost drilling fluid circulation (±100 gallons) at ±1.5 feet.		0.0	SS-4-1, SS-4-2	23, 31		8-inch Morris monument set in concrete; ±1-inch I.D. PVC; Bentonite chips
8, 9, 10, 11, 12, 13, 14, 15, 16, 17, 18, 19, 20, 21, 22	Dense, sandy GRAVEL and COBBLES, trace silt; grey-brown, wet, fine to coarse sand, fine to coarse, subrounded to rounded gravel and cobbles up to ±4 inches in diameter, (alluvium). Very dense below ±12 feet. Medium dense from ±17 to 20 feet. Lost drilling fluid circulation occasionally (up to ±700 gallons) from ±1.5 to 22 feet.		443.0 / 7.0	SS-4-3, SS-4-4, SS-4-5, SS-4-6, SS-4-7	32, 50/1st 5.5", 99, 19, 55		Colorado silica sand; 0.010 machine slot screen
23, 24, 25	Extremely weak to very weak (R0 to R1) SILTSTONE; grey-brown, slightly weathered, (Eugene Formation). Slightly weathered to fresh below ±23 feet.		428.0 / 22.0	SS-4-8, SS-4-9	93/8", 50/1st 3"		Bentonite chips
	BOTTOM OF BORING		424.7 / 25.3				

Project No.: 2131052

Surface Elevation: 450.0 feet (Approx.)

Date of Boring: November 5, 2013

Boring Log: BH-4

Franklin-McVay Sewer

Springfield, Oregon

Foundation Engineering, Inc.

Depth Feet	Soil and Rock Description and Comments	Log	Elev. Depth 448.5	Samples	SPT, N-Value / Recovery / Moisture, % / RQD., % (0 – 50 – 100)	Installations/ Water Table
1, 2	Medium dense gravelly SAND, trace silt; brown, moist, low plasticity silt, fine to coarse sand, fine to coarse, angular to rounded gravel, (fill).		0.0			Capped with gravel
3, 4	Stiff SILT, some sand, trace gravel; brown, damp, low plasticity, fine to coarse sand, fine, angular to rounded gravel, (fill).		446.0 2.5	SS-5-1	10	Backfilled with bentonite chips
5, 6, 7, 8, 9, 10, 11, 12, 13, 14, 15, 16, 17, 18	Very dense sandy GRAVEL, trace silt, scattered cobbles; grey-brown, damp, low plasticity silt, fine to coarse sand, fine to coarse, subrounded to rounded gravel, cobbles up to ±8 inches in diameter, (alluvium). Becomes dense at ±7.5 feet. Becomes medium dense from ±12.5 to 16 feef and wet below ±12.5 feet.		443.5 5.0	SS-5-2 SS-5-3 SS-5-4 SS-5-5 SS-5-6 SS-5-7	54 44 50/1st 5" 25 26 60/11"	Ground water encountered during drilling
19, 20	Extremely weak (R0) SILTSTONE; grey, slightly weathered, (Eugene Formation).		429.8 18.8			
	BOTTOM OF BORING		428.3 20.3	SS-5-8	50/1st 3"	

Project No.: 2131052

Surface Elevation: 448.5 feet (Approx.)

Date of Boring: October 10, 2013

Boring Log: BH-5

Franklin-McVay Sewer

Springfield, Oregon

Foundation Engineering, Inc.

Depth Feet	Soil and Rock Description and Comments	Elev. Depth	Samples	SPT, N-Value ▲ / Recovery ▨ (0–50)	Moisture, % ● / RQD., % ⊞ (50–100)	Installations/ Water Table
		450.5				
1	Soft to medium stiff SILT, some sand; brown, damp, low plasticity, fine to coarse sand, (fill).	0.0				12-inch Morris monument set in concrete
2						
3	Scattered charcoal fragments at ±2.5 feet.		SS-6-1	5		Bentonite chips
4						
5	Medium stiff SILT, trace sand; brown, damp, low plasticity, fine sand, (alluvium).	445.5 / 5.0	SS-6-2	8		±1-inch I.D. PVC
6						
7						
8	Becomes stiff with no sand below ±7.5 feet.		SH-6-3			
9						
10			SS-6-4	11		Colorado silica sand
11						
12						0.010 machine slot screen
13	Medium dense sandy GRAVEL, trace silt; grey-brown, moist, low plasticity silt, fine to coarse sand, fine to coarse, subrounded to rounded gravel, (alluvium).	438.0 / 12.5	SS-6-5	28		
14						
15	Extremely weak to very weak (R0 to R1) SANDSTONE; grey, slightly weathered, fine to medium sand, (Eugene Formation).	435.5 / 15.0	SS-6-6		50/2"	Ground water encountered during drilling Colorado silica sand
16						
17						
18						
19						
20		430.0 / 20.5	SS-6-7		50/1st 6"	
	BOTTOM OF BORING					

Project No.: 2131052

Surface Elevation: 450.5 feet (Approx.)

Date of Boring: October 11, 2013

Boring Log: BH-6

Franklin-McVay Sewer

Springfield, Oregon

Foundation Engineering, Inc.

Appendix C

Field and Laboratory Test Results

Professional Geotechnical Services

Foundation Engineering, Inc.

Table 1C. Atterberg Limits, Natural Water Contents, and Percent Fines

Sample Number	Sample Depth (feet)	Moisture Content (percent)	LL	PL	PI	USCS Classification	Percent Fines
SS-1-1	2.5-4.0	21.8					17.1
SS-1-8	22.5-22.8	21.8					
SS-2-6	15-15.5	21.4					
SS-3-8	20-20.8	15.3					
SS-5-1	2.5-4.0	19.3					36.6
SS-5-8	20-20.8	19.9					
SS-6-1	2.5-4.0	28.3	38	27	11	ML	
SS-6-2	5-6.5	26.8					55.9
SH-6-3	7.5-9.5	31.0					
SS-6-4	9.5-11	29.2	52	32	20	MH	
SS-6-6	15-15.8	21.5					
SS-6-7	20-20.5	25.1					

Table 2C. Unconfined Compression (ASTM D 2166) *

Sample Number*	Sample Depth (ft)	Length (in)	Diameter (in)	Corrected Area (in^2)	Water Content (percent)	Load (lbs)	Compressive Strength (psi)
CS-2-1	18.0-18.5′	5.052	2.389	4.48	10.5	3,881	866
CS-3-1	20.5-21.0′	5.031	2.394	4.50	10.6	4,950	1,100

*Tests run by FEI Testing & Inspection, Inc.

Foundation Engineering, Inc.
Professional Geotechnical Services

Memorandum

Date: January 13, 2014

To: William Evonuk, P.E.
Murray, Smith & Associates, Inc.

From: James K. Maitland, P.E., G.E.

Subject: Addendum to Phase 2 Geotechnical Report

Project: Franklin McVay Sanitary Sewer Expansion
FEI Project 2131052

REGISTERED PROFESSIONAL ENGINEER
10701
OREGON
July 18, 1980
JAMES K. MAITLAND
EXPIRES: 12/31/14

Foundation engineering, Inc. (FEI) completed a Phase 2 geotechnical study for the planned Franklin McVay Sanitary Sewer Expansion in Springfield, Oregon. Our findings are summarized in a report dated November 13, 2013. This memorandum represents an addendum to that report and provides clarification requested by the City concerning the issue of shoring.

The pipeline alignment contains gravels and other soils that are prone to caving, particularly in the presence of persistent seepage. Additional subsurface conditions are discussed in detail in the report and, for the sake of brevity, are not repeated herein. Pages 11 and 12 of the above-referenced report provide a discussion of shoring needs and recommendations for shoring design based on the conditions encountered. However, those recommendations were not intended to imply that continuous positive shoring (e.g., sheet piles or other braced excavation) was required for the entire pipeline alignment.

If the water table is depressed, extends below the limits of excavation, or can be lowered successfully by dewatering, it is possible the soils will not cave progressively. In that instance, shielding boxes (aka, "coffins") could be used to protect workers, especially in open area where some ground loss behind the shoring is not critical. It is our understanding the work zone in the immediate vicinity of the planned pipeline will be closed. Therefore, some caving may be tolerable in those areas and temporary shielding boxes may be appropriate.

On the other hand, if dewatering efforts are not successful or if there is persistent seepage and caving of the sidewalls, continuous shoring such as sheet piles may be required to both protect the workers and limit ground loss adjacent to critical infrastructure. Ultimately it is the contractor's responsibility to select, design and install the shoring. We anticipate that a combination of the shoring methods described above will likely be required. The actual selection will depend on the contractor's means and methods, the time of construction, ground water levels, and the proximity to critical infrastructure.

We hope this information services to clarify the issue. Please do not hesitate to contact us if the City or you have any additional questions.

820 NW Cornell Avenue • Corvallis, Oregon 97330 • Bus. (541) 757-7645 • Fax (541) 757-7650

Foundation Engineering, Inc.
Professional Geotechnical Services

Memorandum

Date: April 14, 2014

To: William Evonuk, P.E.
Murray, Smith & Associates, Inc.

From: James K. Maitland, P.E., G.E.

Subject: Water Level Measurement Summary

Project: Franklin McVay Sanitary Sewer Expansion
FEI Project 2131052-101

REGISTERED PROFESSIONAL ENGINEER
10701
OREGON
July 18, 1980
JAMES K. MAITLAND
EXPIRES: 12/31/14

Foundation Engineering, Inc. (FEI) installed three standpipe piezometers in October 2013 for the planned Franklin McVay Sanitary Sewer Expansion in Springfield, Oregon. We subsequently monitored ground water levels in the piezometers on a periodic basis, particularly after periods of extended rainfall.

A summary of the water level measurements is shown on Table 1 (attached) and includes ground levels encountered in auger borings at the time of our field exploration. As we indicated in our geotechnical report, the contractor should read the piezometers prior to construction to confirm ground water levels at that time.

It has been a pleasure assisting you with this portion of the project. Please do not hesitate to contact us if you have any questions or need further assistance.

820 NW Cornell Avenue • Corvallis, Oregon 97330 • Bus. (541) 757-7645 • Fax (541) 757-7650

Table 1. Summary of Piezometric Data

Borehole	Date	Water Depth (feet)	Water Elevation (feet)
BH-2 (±El. 440.5)	10/11/13	7.90	432.60
	10/16/13	7.70	432.80
	10/23/13	8.50	432.00
	10/29/13	8.65	431.85
	11/05/13	8.80	431.70
	11/07/13	8.60	431.90
	3/04/14	4.80	435.70
	4/11/14	6.40	434.10
BH-3 (±El. 449.0)	10/10/13	17.50	431.50
BH-4 (±El. 450.0)	11/05/13	18.40	431.60
	11/07/13	18.40	431.60
	3/04/14	14.30	435.70
	4/11/14	16.10	433.90
BH-5 (±El. 448.8)	10/10/13	15.00	433.50
BH-6 (±El. 450.5)	10/11/13	14.40	436.10
	10/16/13	14.80	435.70
	10/23/13	14.50	436.00
	10/29/13	14.20	436.30
	11/05/13	14.15	436.35
	11/07/13	13.90	436.60
	3/04/14	10.50	440.00
	4/11/14	13.10	437.40

Notes:
1. Piezometric water depths are referenced to the surface of the Morris monument.
2. Water surface elevations were estimated from borehole surface elevations provided by MSA. The elevations are reported to two decimals for comparison purposes only, and do not reflect the accuracy of the estimates. It should be assumed that water level elevations are accurate to ±0.5 feet.

APPENDIX B
Permits and Approvals

February 06, 2014
Folder: 02849-38

CITY OF SPRINGFIELD
225 5TH STREET
SPRINGFIELD OR 97477

Re: Proposed 18.7 Inch Encased waste water Pipeline Crossing of Railroad Property at Mile Post 621 on the Brooklyn Subdivision/Branch at or near Springfield, Lane County, Oregon

Mr. Mark Vaneeckhout:

Attached are duplicate originals of an agreement covering your use of the Railroad Company's right of way. Please execute the attached documents IN DUPLICATE and return.

An original copy of the fully-executed document will be returned to you, when approved and processed by the Railroad Company. Also, please provide a resolution or other authorization for the party executing the documents, *if signature authorization is required by your Entity.*

Railroad Protective Liability Insurance (RPLI) may be obtained from any insurance company which offers such coverage. Union Pacific has also worked with a national broker, Marsh USA, to make available RPLI to you or your contractor. You can find additional information, premium quotes, and application forms at (uprr.marsh.com).

- Railroad Protective Liability Insurance (RPLI) may be obtained from any insurance company which offers such coverage. Union Pacific has also worked with a national broker, Marsh USA, to make available RPLI to you or your contractor. You can find additional information, premium quotes, and application forms at (uprr.marsh.com).

If we have not received the executed documents within six months from the date of this letter, this proposed offer of an agreement is withdrawn and becomes null and void.

If you have any questions, please contact me at (402) 544-8553.

Sincerely,

Connie Alvis
Manager - Contracts

PIPELINE CROSSING AGREEMENT

Mile Post: 621, Brooklyn Subdivision
Location: Springfield, Lane County, Oregon

THIS AGREEMENT ("Agreement") is made and entered into as of February 06, 2014, ("Effective Date") by and between **UNION PACIFIC RAILROAD COMPANY**, a Delaware corporation, ("Licensor") and **CITY OF SPRINGFIELD**, to be addressed at 225 5th Street, Springfield, Oregon 97477 ("Licensee").

IT IS MUTUALLY AGREED BY AND BETWEEN THE PARTIES HERETO AS FOLLOWS:

Article 1. LICENSOR GRANTS RIGHT.

In consideration of the license fee to be paid by the Licensee and in further consideration of the covenants and agreements herein contained to be by the Licensee kept, observed and performed, the Licensor hereby grants to the Licensee the right to construct and thereafter, during the term hereof, to maintain and operate

one 18.7 inch encased pipeline for transporting and conveying waste water only

across Licensor's track(s) and property (the "Pipeline") in the location shown and in conformity with the dimensions and specifications indicated on the print dated February 03, 2014 and marked **Exhibit A**, attached hereto and hereby made a part hereof. Under no circumstances shall Licensee modify the use of the Pipeline for a purpose other than transporting and conveying waste water, and the Pipeline shall not be used to convey any other substance, any fiber optic cable, or for any other use, whether such use is currently technologically possible, or whether such use may come into existence during the life of this Agreement.

For the purposes of Exhibit A, Licensee acknowledges that if it or its contractor provides to Railroad digital imagery depicting the Pipeline crossing, Licensee authorizes Railroad to use the Digital Imagery in preparing the print attached as an exhibit hereto. Licensee represents and warrants that through a license or otherwise, it has the right to use the Digital Imagery and to permit Railroad to use the Digital Imagery in said manner.

Article 2. **CONSTRUCTION, MAINTENANCE AND OPERATION.**

The grant of right herein made to the Licensee is subject to each and all of the terms, provisions, conditions, limitations and covenants set forth herein and in **Exhibit B**, attached hereto and hereby made a part hereof.

Article 3. **DEFINITION OF LICENSEE.**

For purposes of this Agreement, all references in this Agreement to the Licensee shall include the Licensee's contractors, subcontractors, officers, agents and employees, and others acting under its or their authority. If a contractor is hired by the Licensee for any work performed on the Pipeline (including initial construction and subsequent relocation or maintenance and repair work), then the Licensee shall provide a copy of this Agreement to its contractor and require its contractor to comply with all the terms and provisions hereof relating to the work to be performed. Any contractor or subcontractor shall be deemed an agent of Licensee for the purpose of this Agreement, and Licensee shall require such contractor or subcontractor to release, defend and indemnify Licensor to the same extent and under the same terms and conditions as Licensee is required to release, defend and indemnify Licensor herein.

Article 4. **INSURANCE.**

A. During the life of the License, Licensee shall fully comply with the insurance requirements described in **Exhibit C**.

B. Failure to maintain insurance as required shall entitle, but not require, Licensor to terminate this License immediately.

C. If the Licensee is subject to statute(s) limiting its insurance liability and/or limiting its ability to obtain insurance in compliance with **Exhibit C** of this license, those statutes shall apply.

D. Licensee hereby acknowledges that is has reviewed the requirements of **Exhibit C**, including without limitation the requirement for Railroad Protective Liability Insurance during construction, maintenance, installation, repair or removal of the pipeline which is the subject of this Agreement.

Article 5. **TERM.**

This Agreement shall take effect as of the Effective Date first herein written and shall continue in full force and effect until terminated as herein provided.

IN WITNESS WHEREOF, the parties hereto have caused this Agreement to be executed as of the date first herein written.

UNION PACIFIC RAILROAD COMPANY	**CITY OF SPRINGFIELD**
By: _____	By: _____
Constance R. Alvis Manager - Contracts	Name Printed: _____
	Title: _____

1-17-14

PLACE ARROW INDICATING NORTH DIRECTION RELATIVE TO CROSSING

ENCASED NON-FLAMMABLE PIPELINE CROSSING

FORM DR-0404-B
REV 10-22-2007
www.uprr.com
NO SCALE

NOTE: ALL AVAILABLE DIMENSIONS MUST BE FILLED IN TO PROCESS THIS APPLICATION.

(OR LEGAL SURVEY LINE, WHERE APPLICABLE)
S LINE OF SECTION 34, TOWNSHIP 17, RANGE 3, W MERIDIAN

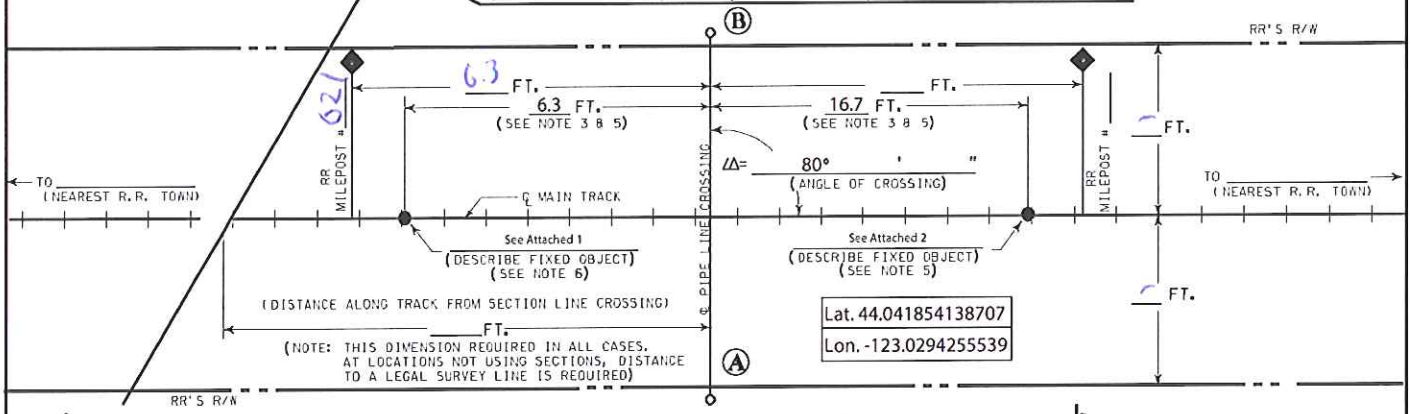

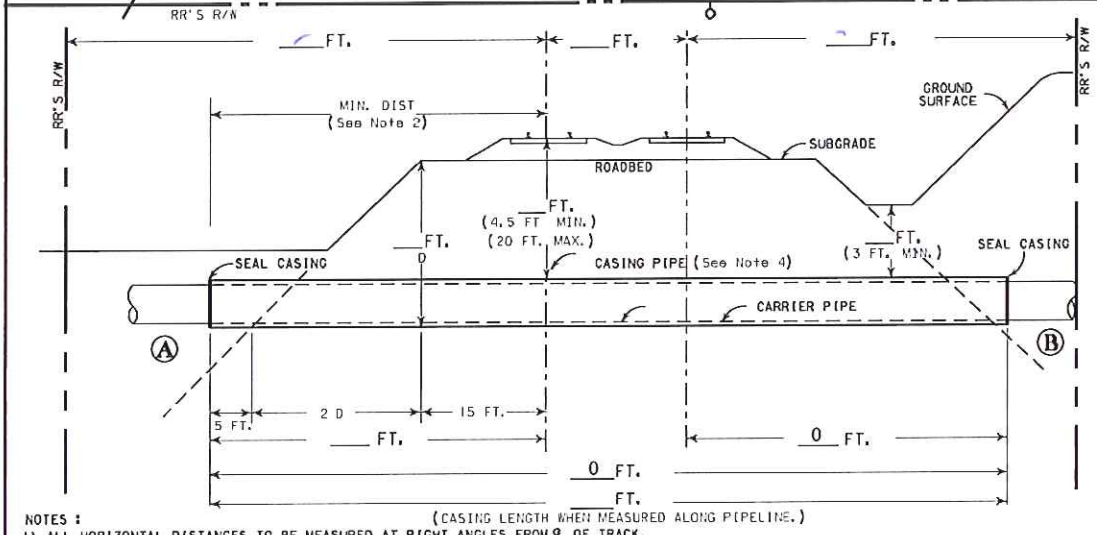

STEEL CASING WALL THICKNESS CHART		
MINIMUM THICKNESS		DIAMETER OF CASING PIPE
.2500"	1/4"	12" OR LESS
.3125"	5/16"	OVER 12"-18"
.3750"	3/8"	OVER 18"-22"
.4375"	7/16"	OVER 22"-28"
.5000"	1/2"	OVER 28"-34"
.5625"	9/16"	OVER 34"-42"
.6250"	5/8"	OVER 42"-48"

OVER 48" MUST BE APPROVED BY R.R. CO.

NOTE: THIS CHART IS ONLY FOR SMOOTH STEEL CASING PIPES WITH MINIMUM YIELD STRENGTH OF 35,000 PSI.

FORMULA TO FIGURE CASING LENGTH WITH ANGLE OF CROSSING OTHER THAN 90°

$\frac{B}{\Delta \text{ SIN}}$

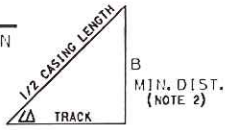

NOTES :
1) ALL HORIZONTAL DISTANCES TO BE MEASURED AT RIGHT ANGLES FROM ℄ OF TRACK.
2) CASING TO EXTEND BEYOND THE ℄ OF TRACK AT RIGHT ANGLES THE GREATER OF 2D + 20 FT., OR 30 FT., AND BEYOND LIMIT OF RAILROAD RIGHT-OF-WAY IF NECESSARY TO PROVIDE PROPER LENGTH OUTSIDE OF TRACK.
3) MINIMUM OF 50' FROM THE END OF ANY RAILROAD BRIDGE, ℄ OF ANY CULVERT, OR FROM ANY SWITCHING AREA.
4) SIGNAL REPRESENTATIVE MUST BE PRESENT DURING INSTALLATION IF RAILROAD SIGNALS ARE IN THE VICINITY OF CROSSING.
5) ALLOWABLE FIXED OBJECTS INCLUDE: BACKWALLS OF BRIDGES; ℄ OF ROAD CROSSINGS & OVERHEAD VIADUCTS (GIVE ROAD NAME), OR CULVERTS.
6) CASING AND CARRIER PIPE MUST BE PLACED A MINIMUM OF 2 FEET BELOW THE EXISTING FIBER OPTIC CABLE. ANY EXCAVATION REQUIRED WITHIN 5 FEET OF THE EXISTING FIBER OPTIC CABLE MUST BE HAND DUG.

A) IS PIPELINE CROSSING WITHIN DEDICATED STREET ? (•) YES; ( ) NO;
B) IF YES, NAME OF STREET HWY 225
D) DISTRIBUTION LINE ( ) OR TRANSMISSION LINE (•)
C) CARRIER PIPE :
COMMODITY TO BE CONVEYED WASTEWATER
OPERATING PRESSURE 0 PSI
WALL THICKNESS 0.671 ; DIAMETER 18.7 ; MATERIAL PVC ;
E) CASING PIPE :
WALL THICKNESS — ; DIAMETER — ; MATERIAL STEEL ;
NOTE : CASING MUST HAVE 2" CLEARANCE BETWEEN GREATEST OUTSIDE DIAMETER OF CARRIER PIPE AND INTERIOR DIAMETER OF CASING PIPE. WHEN FURNISHING DIMENSIONS, GIVE OUTSIDE OF CARRIER PIPE AND INSIDE OF CASING PIPE.
F) METHOD OF INSTALLING CASING PIPE UNDER TRACK(S):
( ) DRY BORE AND JACK (WET BORE NOT PERMITTED) ;
( ) TUNNEL ; OTHER TRENCH
G) WILL CONSTRUCTION BE BY AN OUTSIDE CONTRACTOR? ( ) YES; ( ) NO;
H) DISTANCE FROM CENTER LINE OF TRACK TO NEAR FACE OF BORING AND JACKING PITS WHEN MEASURED AT RIGHT ANGLES TO TRACK _____ (30' MIN.)
I) APPLICANT HAS CONTACTED 1-800-336-9193, U. P. COMMUNICATION DEPARTMENT, AND HAS DETERMINED FIBER OPTIC CABLE (•) DOES ; ( ) DOES NOT ; EXIST IN VICINITY OF WORK TO BE PERFORMED . TICKET NO. 2014-0110-046

EXHIBIT "A"

(FOR RAILROAD USE ONLY)

UNION PACIFIC RAILROAD CO.

Brooklyn
(SUBDIVISION)

M. P 621 E. S. 29+06±

ENCASED WASTEWATER CROSSING AT

SPRINGFIELD (NEAREST CITY) Lane (COUNTY) OR (STATE)

CITY OF SPRINGFIELD
(APPLICANT)

RR FILE NO. 0284938 DATE 2-3-14

WARNING

IN ALL OCCASIONS, U. P. COMMUNICATIONS DEPARTMENT MUST BE CONTACTED IN ADVANCE OF ANY WORK TO DETERMINE EXISTENCE AND LOCATION OF FIBER OPTIC CABLE.
PHONE : 1-800-336-9193

EXHIBIT B

Section 1. LIMITATION AND SUBORDINATION OF RIGHTS GRANTED.

A. The foregoing grant of right is subject and subordinate to the prior and continuing right and obligation of the Licensor to use and maintain its entire property including the right and power of the Licensor to construct, maintain, repair, renew, use, operate, change, modify or relocate railroad tracks, signal, communication, fiber optics, or other wirelines, pipelines and other facilities upon, along or across any or all parts of its property, all or any of which may be freely done at any time or times by the Licensor without liability to the Licensee or to any other party for compensation or damages.

B. The foregoing grant is also subject to all outstanding superior rights (including those in favor of licensees and lessees of the Licensor's property, and others) and the right of the Licensor to renew and extend the same, and is made without covenant of title or for quiet enjoyment.

Section 2. CONSTRUCTION, MAINTENANCE AND OPERATION.

A. The Pipeline shall be designed, constructed, operated, maintained, repaired, renewed, modified and/or reconstructed by the Licensee in strict conformity with (i) Licensor's current standards and specifications ("UP Specifications"), except for variances approved in advance in writing by the Licensor's Assistant Vice President Engineering – Design, or his authorized representative; (ii) such other additional safety standards as the Licensor, in its sole discretion, elects to require, including, without limitation, American Railway Engineering and Maintenance-of-Way Association ("AREMA") standards and guidelines (collectively, "UP Additional Requirements"), and (iii) all applicable laws, rules and regulations ("Laws"). If there is any conflict between the requirements of any Law and the UP Specifications or the UP Additional Requirements, the most restrictive will apply.

B. All work performed on property of the Licensor in connection with the design, construction, maintenance, repair, renewal, modification or reconstruction of the Pipeline shall be done to the satisfaction of the Licensor.

C. Prior to the commencement of any work in connection with the design, construction, maintenance, repair, renewal, modification, relocation, reconstruction or removal of the Pipeline from Licensor's property, the Licensee shall submit to the Licensor plans setting out the method and manner of handling the work, including the shoring and cribbing, if any, required to protect the Licensor's operations, and shall not proceed with the work until such plans have been approved by the Licensor's Assistant Vice President Engineering Design, or his authorized representative, and then the work shall be done to the satisfaction of the Licensor's Assistant Vice President Engineering Design or his authorized representative. The Licensor shall have the right, if it so elects, to provide such support as it may deem necessary for the safety of its track or tracks during the time of construction, maintenance, repair, renewal, modification, relocation, reconstruction or removal of the Pipeline, and, in the event the Licensor provides such support,

the Licensee shall pay to the Licensor, within fifteen (15) days after bills shall have been rendered therefore, all expenses incurred by the Licensor in connection therewith, which expenses shall include all assignable costs.

D. The Licensee shall keep and maintain the soil over the Pipeline thoroughly compacted and the grade even with the adjacent surface of the ground.

E. In the prosecution of any work covered by this Agreement, Licensee shall secure any and all necessary permits and shall comply with all applicable federal, state and local laws, regulations and enactments affecting the work including, without limitation, all applicable Federal Railroad Administration regulations.

Section 3. <u>NOTICE OF COMMENCEMENT OF WORK / LICENSOR REPRESENTATIVE / SUPERVISION / FLAGGING / SAFETY.</u>

A. If an emergency should arise requiring immediate attention, the Licensee shall provide as much notice as practicable to Licensor before commencing any work. In all other situations, the Licensee shall notify the Licensor at least ten (10) days (or such other time as the Licensor may allow) in advance of the commencement of any work upon property of the Licensor in connection with the construction, maintenance, repair, renewal, modification, reconstruction, relocation or removal of the Pipeline. All such work shall be prosecuted diligently to completion. The Licensee will coordinate its initial, and any subsequent work with the following employee of Licensor or his or her duly authorized representative (hereinafter "Licensor Representative" or "Railroad Representative"):

Rick E. Abbott
Manager of Track
Work Phone: 541/8 341-5521
Cell Phone: 541 981-3683

Joseph Cobarrubia
Manager of Signal
Cell Phone: 541 619-7541

B. Licensee, at its own expense, shall adequately police and supervise all work to be performed. The responsibility of Licensee for safe conduct and adequate policing and supervision of work shall not be lessened or otherwise affected by Licensor's approval of plans and specifications involving the work, or by Licensor's collaboration in performance of any work, or by the presence at the work site of a Licensor Representative, or by compliance by Licensee with any requests or recommendations made by the Licensor Representative.

C. At the request of Licensor, Licensee shall remove from Licensor's property any employee who fails to conform to the instructions of the Licensor Representative in connection with the work on Licensor's property. Licensee shall indemnify Licensor against any claims arising from the removal of any such employee from Licensor's property.

D. Licensee shall notify the Licensor Representative at least ten (10) working days in advance of proposed performance of any work in which any person or equipment will be within twenty-five (25) feet of any track, or will be near enough to any track that any equipment extension (such as, but not limited to, a crane boom) will reach to within twenty-five (25) feet of any track. No work of any kind shall be performed, and no person, equipment, machinery, tool(s), material(s), vehicle(s), or thing(s) shall be located, operated, placed, or stored within twenty-five (25) feet of any of Licensor's track(s) at any time, for any reason, unless and until a railroad flagman is provided to watch for trains. Upon receipt of such ten (10) day notice, the Licensor Representative will determine and inform Licensee whether a flagman need be present and

whether any special protective or safety measures need to be implemented. If flagging or other special protective or safety measures are performed by Licensor, Licensor will bill Licensee for such expenses incurred by Licensor, unless Licensor and a federal, state or local governmental entity have agreed that Licensor is to bill such expenses to the federal, state or local governmental entity. If Licensor will be sending the bills to Licensee, Licensee shall pay such bills within thirty (30) days of receipt of billing. If Licensor performs any flagging, or other special protective or safety measures are performed by Licensor, Licensee agrees that Licensee is not relieved of any of responsibilities or liabilities set forth in this Agreement.

E. The rate of pay per hour for each flagman will be the prevailing hourly rate in effect for an eight-hour day for the class of flagmen used during regularly assigned hours and overtime in accordance with Labor Agreements and Schedules in effect at the time the work is performed. In addition to the cost of such labor, a composite charge for vacation, holiday, health and welfare, supplemental sickness, Railroad Retirement and unemployment compensation, supplemental pension, Employees Liability and Property Damage and Administration will be included, computed on actual payroll. The composite charge will be the prevailing composite charge in effect at the time the work is performed. One and one-half times the current hourly rate is paid for overtime, Saturdays and Sundays, and two and one-half times current hourly rate for holidays. Wage rates are subject to change, at any time, by law or by agreement between Licensor and its employees, and may be retroactive as a result of negotiations or a ruling of an authorized governmental agency. Additional charges on labor are also subject to change. If the wage rate or additional charges are changed, Licensee (or the governmental entity, as applicable) shall pay on the basis of the new rates and charges.

F. Reimbursement to Licensor will be required covering the full eight-hour day during which any flagman is furnished, unless the flagman can be assigned to other railroad work during a portion of such day, in which event reimbursement will not be required for the portion of the day during which the flagman is engaged in other railroad work. Reimbursement will also be required for any day not actually worked by the flagman following the flagman's assignment to work on the project for which Licensor is required to pay the flagman and which could not reasonably be avoided by Licensor by assignment of such flagman to other work, even though Licensee may not be working during such time. When it becomes necessary for Licensor to bulletin and assign an employee to a flagging position in compliance with union collective bargaining agreements, Licensee must provide Licensor a minimum of five (5) days notice prior to the cessation of the need for a flagman. If five (5) days notice of cessation is not given, Licensee will still be required to pay flagging charges for the five (5) day notice period required by union agreement to be given to the employee, even though flagging is not required for that period. An additional ten (10) days notice must then be given to Licensor if flagging services are needed again after such five day cessation notice has been given to Licensor.

G. Safety of personnel, property, rail operations and the public is of paramount importance in the prosecution of the work performed by Licensee or its contractor. Licensee shall be responsible for initiating, maintaining and supervising all safety, operations and programs in connection with the work. Licensee and its contractor shall at a minimum comply with Licensor's safety standards listed in **Exhibit D**, hereto attached, to ensure uniformity with the safety standards followed by Licensor's own forces. As a part of Licensee's safety responsibilities, Licensee shall notify Licensor if it determines that any of Licensor's safety standards are contrary to good safety practices. Licensee and its contractor shall furnish copies of **Exhibit D** to each of its employees before they enter the job site.

H. Without limitation of the provisions of paragraph G above, Licensee shall keep the job site free from safety and health hazards and ensure that their employees are competent and adequately trained in all safety and health aspects of the job.

I. Licensee shall have proper first aid supplies available on the job site so that prompt first aid services may be provided to any person injured on the job site. Prompt notification shall be given to Licensor of any U.S. Occupational Safety and Health Administration reportable injuries. Licensee shall have a non-delegable duty to control its employees while they are on the job site or any other property of Licensor, and to be certain they do not use, be under the influence of, or have in their possession any alcoholic beverage, drug or other substance that may inhibit the safe performance of any work.

J. If and when requested by Licensor, Licensee shall deliver to Licensor a copy of its safety plan for conducting the work (the "Safety Plan"). Licensor shall have the right, but not the obligation, to require Licensee to correct any deficiencies in the Safety Plan. The terms of this Agreement shall control if there are any inconsistencies between this Agreement and the Safety Plan.

Section 4. <u>LICENSEE TO BEAR ENTIRE EXPENSE.</u>

The Licensee shall bear the entire cost and expense incurred in connection with the design, construction, maintenance, repair and renewal and any and all modification, revision, relocation, removal or reconstruction of the Pipeline, including any and all expense which may be incurred by the Licensor in connection therewith for supervision, inspection, flagging, or otherwise.

Section 5. <u>REINFORCEMENT, RELOCATION OR REMOVAL OF PIPELINE.</u>

A. The license herein granted is subject to the needs and requirements of the Licensor in the safe and efficient operation of its railroad and in the improvement and use of its property. The Licensee shall, at the sole expense of the Licensee, reinforce or otherwise modify the Pipeline, or move all or any portion of the Pipeline to such new location, or remove the Pipeline from the Licensor’s property, as the Licensor may designate, whenever, in the furtherance of its needs and requirements, the Licensor, at its sole election, finds such action necessary or desirable.

B. All the terms, conditions and stipulations herein expressed with reference to the Pipeline on property of the Licensor in the location hereinbefore described shall, so far as the Pipeline remains on the property, apply to the Pipeline as modified, changed or relocated within the contemplation of this section.

Section 6. <u>NO INTERFERENCE WITH LICENSOR'S OPERATION.</u>

A. The Pipeline and all parts thereof within and outside of the limits of the property of the Licensor shall be designed, constructed and, at all times, maintained, repaired, renewed and operated in such manner as to cause no interference whatsoever with the constant, continuous and uninterrupted use of the tracks, property and facilities of the Licensor and nothing shall be done or suffered to be done by the Licensee at any time that would in any manner impair the safety thereof.

B. Explosives or other highly flammable substances shall not be stored on Licensor's property without the prior written approval of Licensor.

C. No additional vehicular crossings (including temporary haul roads) or pedestrian crossings over Licensor's trackage shall be installed or used by Licensor or its contractors without the prior written permission of Licensor.

D. When not in use, any machinery and materials of Licensee or its contractors shall be kept at least fifty (50) feet from the centerline of Licensor's nearest track.

E. Operations of Licensor and work performed by Licensor's personnel may cause delays in the work to be performed by Licensee. Licensee accepts this risk and agrees that Licensor shall have no liability to Licensee or any other person or entity for any such delays. Licensee shall coordinate its activities with those of Licensor and third parties so as to avoid interference with railroad operations. The safe operation of Licensor's train movements and other activities by Licensor take precedence over any work to be performed by Licensee.

Section 7. <u>PROTECTION OF FIBER OPTIC CABLE SYSTEMS.</u>

A. Fiber optic cable systems may be buried on the Licensor's property. Protection of the fiber optic cable systems is of extreme importance since any break could disrupt service to users resulting in business interruption and loss of revenue and profits. Licensee shall telephone the Licensor during normal business hours (7:00 a.m. to 9:00 p.m. Central Time, Monday through Friday, except for holidays) at 1-800-336-9193 (also a 24-hour, 7-day number for emergency calls) to determine if fiber optic cable is buried anywhere on the Licensor's premises to be used by the Licensee. If it is, Licensee will telephone the telecommunications company(ies) involved, arrange for a cable locator, make arrangements for relocation or other protection of the fiber optic cable, all at Licensee’s expense, and will commence no work on the Licensor’s property until all such protection or relocation has been accomplished. Licensee shall indemnify and hold the Licensor harmless from and against all costs, liability and expense whatsoever (including, without limitation, attorneys' fees, court costs and expenses) arising out of or caused in any way by Licensee's failure to comply with the provisions of this paragraph.

B. IN ADDITION TO OTHER INDEMNITY PROVISIONS IN THIS AGREEMENT, THE LICENSEE SHALL, AND SHALL CAUSE ITS CONTRACTOR TO, RELEASE, INDEMNIFY, DEFEND AND HOLD THE LICENSOR HARMLESS FROM AND AGAINST ALL COSTS, LIABILITY AND EXPENSE WHATSOEVER (INCLUDING, WITHOUT LIMITATION, ATTORNEYS' FEES, COURT COSTS AND EXPENSES) CAUSED BY THE NEGLIGENCE OF THE LICENSEE, ITS CONTRACTORS, AGENTS AND/OR EMPLOYEES, RESULTING IN (1) ANY DAMAGE TO OR DESTRUCTION OF ANY TELECOMMUNICATIONS SYSTEM ON LICENSOR'S PROPERTY, AND/OR (2) ANY INJURY TO OR DEATH OF ANY PERSON EMPLOYED BY OR ON BEHALF OF ANY TELECOMMUNICATIONS COMPANY, AND/OR ITS CONTRACTOR, AGENTS AND/OR EMPLOYEES, ON LICENSOR'S PROPERTY, EXCEPT IF SUCH COSTS, LIABILITY OR EXPENSES ARE CAUSED SOLELY BY THE DIRECT ACTIVE NEGLIGENCE OF THE LICENSOR. LICENSEE FURTHER AGREES THAT IT SHALL NOT HAVE OR SEEK RECOURSE AGAINST LICENSOR FOR ANY CLAIM OR CAUSE OF ACTION FOR ALLEGED LOSS OF PROFITS OR REVENUE OR LOSS OF SERVICE OR OTHER CONSEQUENTIAL DAMAGE TO A TELECOMMUNICATION COMPANY USING LICENSOR'S PROPERTY OR A CUSTOMER OR USER OF SERVICES OF THE FIBER OPTIC CABLE ON LICENSOR'S PROPERTY.

Section 8. <u>CLAIMS AND LIENS FOR LABOR AND MATERIAL; TAXES.</u>

A. The Licensee shall fully pay for all materials joined or affixed to and labor performed upon property of the Licensor in connection with the construction, maintenance, repair, renewal, modification or reconstruction of the Pipeline, and shall not permit or suffer any mechanic's or materialman's lien of any kind or nature to be enforced against the property for any work done or materials furnished thereon at the instance or request or on behalf of the Licensee. The Licensee shall indemnify and hold harmless the Licensor against and from any and all liens, claims, demands, costs and expenses of whatsoever nature in any way connected with or growing out of such work done, labor performed, or materials furnished.

B. The Licensee shall promptly pay or discharge all taxes, charges and assessments levied upon, in respect to, or on account of the Pipeline, to prevent the same from becoming a charge or lien upon property of the Licensor, and so that the taxes, charges and assessments levied upon or in respect to such property shall not be increased because of the location, construction or maintenance of the Pipeline or any improvement, appliance or fixture connected therewith placed upon such property, or on account of the Licensee's interest therein. Where such tax, charge or assessment may not be separately made or assessed to the Licensee but shall be included in the assessment of the property of the Licensor, then the Licensee shall pay to the Licensor an equitable proportion of such taxes determined by the value of the Licensee's property upon property of the Licensor as compared with the entire value of such property.

Section 9. <u>RESTORATION OF LICENSOR'S PROPERTY.</u>

In the event the Licensee in any manner moves or disturbs any of the property of the Licensor in connection with the construction, maintenance, repair, renewal, modification, reconstruction, relocation or removal of the Pipeline, then in that event the Licensee shall, as soon as possible and at Licensee's sole expense, restore such property to the same condition as the same were before such property was moved or disturbed, and the Licensee shall indemnify and hold harmless the Licensor, its officers, agents and employees, against and from any and all liability, loss, damages, claims, demands, costs and expenses of whatsoever nature, including court costs and attorneys' fees, which may result from injury to or death of persons whomsoever, or damage to or loss or destruction of property whatsoever, when such injury, death, damage, loss or destruction grows out of or arises from the moving or disturbance of any other property of the Licensor.

Section 10. <u>INDEMNITY.</u>

A. As used in this Section, "Licensor" includes other railroad companies using the Licensor's property at or near the location of the Licensee's installation and their officers, agents, and employees; "Loss" includes loss, damage, claims, demands, actions, causes of action, penalties, costs, and expenses of whatsoever nature, including court costs and attorneys' fees, which may result from: (a) injury to or death of persons whomsoever (including the Licensor's officers, agents, and employees, the Licensee's officers, agents, and employees, as well as any other person); and/or (b) damage to or loss or destruction of property whatsoever (including Licensee's property, damage to the roadbed, tracks, equipment, or other property of the Licensor, or property in its care or custody).

B. AS A MAJOR INDUCEMENT AND IN CONSIDERATION OF THE LICENSE AND PERMISSION HEREIN GRANTED, TO THE FULLEST EXTENT PERMITTED BY LAW, THE LICENSEE SHALL, AND SHALL CAUSE ITS CONTRACTOR TO, RELEASE, INDEMNIFY, DEFEND AND HOLD HARMLESS THE LICENSOR FROM

ANY LOSS OF ANY KIND, NATURE OR DESCRIPTION ARISING OUT OF, RESULTING FROM OR RELATED TO (IN WHOLE OR IN PART):

1. THE PROSECUTION OF ANY WORK CONTEMPLATED BY THIS AGREEMENT INCLUDING THE INSTALLATION, CONSTRUCTION, MAINTENANCE, REPAIR, RENEWAL, MODIFICATION, RECONSTRUCTION, RELOCATION, OR REMOVAL OF THE PIPELINE OR ANY PART THEREOF;

2. ANY RIGHTS OR INTERESTS GRANTED PURSUANT TO THIS LICENSE;

3. THE PRESENCE, OPERATION, OR USE OF THE PIPELINE OR CONTENTS ESCAPING THEREFROM;

4. THE ENVIRONMENTAL STATUS OF THE PROPERTY CAUSED BY OR CONTRIBUTED TO BY LICENSEE;

5. ANY ACT OR OMISSION OF LICENSEE OR LICENSEE'S OFFICERS, AGENTS, INVITEES, EMPLOYEES, OR CONTRACTORS OR ANYONE DIRECTLY OR INDIRECTLY EMPLOYED BY ANY OF THEM, OR ANYONE THEY CONTROL OR EXERCISE CONTROL OVER; OR

6. LICENSEE'S BREACH OF THIS AGREEMENT,

EXCEPT WHERE THE LOSS IS CAUSED BY THE SOLE DIRECT AND ACTIVE NEGLIGENCE OF THE LICENSOR, AS DETERMINED IN A FINAL JUDGMENT BY A COURT OF COMPETENT JURISDICTION, IT BEING THE INTENTION OF THE PARTIES THAT THE ABOVE INDEMNITY WILL OTHERWISE APPLY TO LOSSES CAUSED BY OR ARISING FROM, IN WHOLE OR IN PART, LICENSOR'S NEGLIGENCE.

C. Upon written notice from Licensor, Licensee agrees to assume the defense of any lawsuit of proceeding brought against any indemnitee by any entity, relating to any matter covered by this License for which Licensee has an obligation to assume liability for and/or save and hold harmless any indemnitee. Licensee shall pay all costs incident to such defense, including, but not limited to, reasonable attorney's fees, investigators' fees, litigation and appeal expenses, settlement payments and amounts paid in satisfaction of judgments.

Section 11. <u>REMOVAL OF PIPELINE UPON TERMINATION OF AGREEMENT.</u>

Prior to the termination of this Agreement howsoever, the Licensee shall, at Licensee's sole expense, remove the Pipeline from those portions of the property not occupied by the roadbed and track or tracks of the Licensor and shall restore, to the satisfaction of the Licensor, such portions of such property to as good a condition as they were in at the time of the construction of the Pipeline. If the Licensee fails to do the foregoing, the Licensor may, but is not obligated, to perform such work of removal and restoration at the cost and expense of the Licensee. In the event of the removal by the Licensor of the property of the Licensee and of the restoration of the roadbed and property as herein provided, the Licensor shall in no manner be liable to the Licensee for any damage sustained by the Licensee for or on account thereof, and such removal and restoration shall in no manner prejudice or impair any right of action for damages, or otherwise, that the Licensor may have against the Licensee.

Section 12. WAIVER OF BREACH.

The waiver by the Licensor of the breach of any condition, covenant or agreement herein contained to be kept, observed and performed by the Licensee shall in no way impair the right of the Licensor to avail itself of any remedy for any subsequent breach thereof.

Section 13. TERMINATION.

A. If the Licensee does not use the right herein granted or the Pipeline for one (1) year, or if the Licensee continues in default in the performance of any covenant or agreement herein contained for a period of thirty (30) days after written notice from the Licensor to the Licensee specifying such default, the Licensor may, at its option, forthwith immediately terminate this Agreement by written notice.

B. In addition to the provisions of subparagraph (a) above, this Agreement may be terminated by written notice given by either party hereto to the other on any date in such notice stated, not less, however, than thirty (30) days subsequent to the date upon which such notice shall be given.

C. Notice of default and notice of termination may be served personally upon the Licensee or by mailing to the last known address of the Licensee. Termination of this Agreement for any reason shall not affect any of the rights or obligations of the parties hereto which may have accrued, or liabilities, accrued or otherwise, which may have arisen prior thereto.

Section 14. AGREEMENT NOT TO BE ASSIGNED.

The Licensee shall not assign this Agreement, in whole or in part, or any rights herein granted, without the written consent of the Licensor, and it is agreed that any transfer or assignment or attempted transfer or assignment of this Agreement or any of the rights herein granted, whether voluntary, by operation of law, or otherwise, without such consent in writing, shall be absolutely void and, at the option of the Licensor, shall terminate this Agreement.

Section 15. SUCCESSORS AND ASSIGNS.

Subject to the provisions of Section 14 hereof, this Agreement shall be binding upon and inure to the benefit of the parties hereto, their heirs, executors, administrators, successors and assigns.

Section 16. SEVERABILITY.

Any provision of this Agreement which is determined by a court of competent jurisdiction to be invalid or unenforceable shall be invalid or unenforceable only to the extent of such determination, which shall not invalidate or otherwise render ineffective any other provision of this Agreement.

Approved: Insurance Group
Created: 9/23/05
Last Modified: 03/29/10
Form Approved, AVP-Law

EXHIBIT C
Union Pacific Railroad Company
Contract Insurance Requirements

Licensee shall, at its sole cost and expense, procure and maintain during the life of this Agreement (except as otherwise provided in this Agreement) the following insurance coverage:

A. **Commercial General Liability** insurance. Commercial general liability (CGL) with a limit of not less than $2,000,000 each occurrence and an aggregate limit of not less than $4,000,000. CGL insurance must be written on ISO occurrence form CG 00 01 12 04 (or a substitute form providing equivalent coverage).

The policy must also contain the following endorsement, WHICH MUST BE STATED ON THE CERTIFICATE OF INSURANCE: "Contractual Liability Railroads" ISO form CG 24 17 10 01 (or a substitute form providing equivalent coverage) showing "Union Pacific Railroad Company Property" as the Designated Job Site.

B. **Business Automobile Coverage** insurance. Business auto coverage written on ISO form CA 00 01 10 01 (or a substitute form providing equivalent liability coverage) with a limit of not less $2,000,000 for each accident, and coverage must include liability arising out of any auto (including owned, hired, and non-owned autos).

The policy must contain the following endorsements, WHICH MUST BE STATED ON THE CERTIFICATE OF INSURANCE: "Coverage For Certain Operations In Connection With Railroads" ISO form CA 20 70 10 01 (or a substitute form providing equivalent coverage) showing "Union Pacific Property" as the Designated Job Site.

C. **Workers Compensation and Employers** Liability insurance. Coverage must include but not be limited to:

Licensee's statutory liability under the workers' compensation laws of the state(s) affected by this Agreement.

Employers' Liability (Part B) with limits of at least $500,000 each accident, $500,000 disease policy limit $500,000 each employee.

If Licensee is self-insured, evidence of state approval and excess workers compensation coverage must be provided. Coverage must include liability arising out of the U. S. Longshoremen's and Harbor Workers' Act, the Jones Act, and the Outer Continental Shelf Land Act, if applicable.

D. **Railroad Protective Liability** insurance. Licensee must maintain "Railroad Protective Liability" insurance written on ISO occurrence form CG 00 35 12 04 (or a substitute form providing equivalent coverage) on behalf of Railroad only as named insured, with a limit of not less than $2,000,000 per occurrence and an aggregate of $6,000,000.

The definition of “JOB LOCATION” and “WORK” on the declaration page of the policy shall refer to this Agreement and shall describe all WORK or OPERATIONS performed under this agreement

E. **Umbrella or Excess** insurance. If Licensee utilizes umbrella or excess policies, and these policies must “follow form” and afford no less coverage than the primary policy.

Other Requirements

F. All policy(ies) required above (except worker’s compensation and employers liability) must include Railroad as “Additional Insured” using ISO Additional Insured Endorsements CG 20 26, and CA 20 48 (or substitute forms providing equivalent coverage). The coverage provided to Railroad as additional insured shall, to the extent provided under ISO Additional Insured Endorsement CG 20 26, and CA 20 48 provide coverage for Railroad’s negligence whether sole or partial, active or passive, and shall not be limited by Licensee’s liability under the indemnity provisions of this Agreement.

G. Punitive damages exclusion, if any, must be deleted (and the deletion indicated on the certificate of insurance), unless (a) insurance coverage may not lawfully be obtained for any punitive damages that may arise under this agreement, or (b) all punitive damages are prohibited by all states in which this agreement will be performed.

H. Licensee waives all rights of recovery, and its insurers also waive all rights of subrogation of damages against Railroad and its agents, officers, directors and employees for damages covered by the workers compensation and employers liability or commercial umbrella or excess liability obtained by Licensee required in this agreement, where permitted by law This waiver must be stated on the certificate of insurance.

I. All insurance policies must be written by a reputable insurance company acceptable to Railroad or with a current Best's Insurance Guide Rating of A- and Class VII or better, and authorized to do business in the state(s) in which the work is to be performed.

J. The fact that insurance is obtained by Licensee or by Railroad on behalf of Licensee will not be deemed to release or diminish the liability of Licensee, including, without limitation, liability under the indemnity provisions of this Agreement. Damages recoverable by Railroad from Licensee or any third party will not be limited by the amount of the required insurance coverage.

EXHIBIT D
SAFETY STANDARDS

MINIMUM SAFETY REQUIREMENTS

The term "employees" as used herein refer to all employees of Licensee or its contractors, subcontractors, or agents, as well as any subcontractor or agent of any Licensee.

I. Clothing

A. All employees of Licensee will be suitably dressed to perform their duties safely and in a manner that will not interfere with their vision, hearing, or free use of their hands or feet.

Specifically, Licensee's employees must wear:

(i) Waist-length shirts with sleeves.
(ii) Trousers that cover the entire leg. If flare-legged trousers are worn, the trouser bottoms must be tied to prevent catching.
(iii) Footwear that covers their ankles and has a defined heel. Employees working on bridges are required to wear safety-toed footwear that conforms to the American National Standards Institute (ANSI) and FRA footwear requirements.

B. Employees shall not wear boots (other than work boots), sandals, canvas-type shoes, or other shoes that have thin soles or heels that are higher than normal.

C. Employees must not wear loose or ragged clothing, neckties, finger rings, or other loose jewelry while operating or working on machinery.

II. Personal Protective Equipment

Licensee shall require its employee to wear personal protective equipment as specified by Railroad rules, regulations, or recommended or requested by the Railroad Representative.

(i) Hard hat that meets the American National Standard (ANSI) Z89.1 – latest revision. Hard hats should be affixed with Licensee's company logo or name.
(ii) Eye protection that meets American National Standard (ANSI) for occupational and educational eye and face protection, Z87.1 – latest revision. Additional eye protection must be provided to meet specific job situations such as welding, grinding, etc.
(iii) Hearing protection, which affords enough attenuation to give protection from noise levels that will be occurring on the job site. Hearing protection, in the form of plugs or muffs, must be worn when employees are within:

- 100 feet of a locomotive or roadway/work equipment
- 15 feet of power operated tools
- 150 feet of jet blowers or pile drivers

- 150 feet of retarders in use (when within 10 feet, employees must wear dual ear protection – plugs and muffs)

(iv) Other types of personal protective equipment, such as respirators, fall protection equipment, and face shields, must be worn as recommended or requested by the Railroad Representative.

III. On Track Safety

Licensee and its contractor are responsible for compliance with the Federal Railroad Administration's Roadway Worker Protection regulations – 49CFR214, Subpart C and Railroad's On-Track Safety rules. Under 49CFR214, Subpart C, railroad contractors are responsible for the training of their employees on such regulations. In addition to the instructions contained in Roadway Worker Protection regulations, all employees must:

(i) Maintain a minimum distance of at least twenty-five (25) feet to any track unless the Railroad Representative is present to authorize movements.

(ii) Wear an orange, reflectorized work wear approved by the Railroad Representative.

(iii) Participate in a job briefing that will specify the type of On-Track Safety for the type of work being performed. Licensee must take special note of limits of track authority, which tracks may or may not be fouled, and clearing the track. Licensee will also receive special instructions relating to the work zone around machines and minimum distances between machines while working or traveling.

IV. Equipment

A. It is the responsibility of Licensee to ensure that all equipment is in a safe condition to operate. If, in the opinion of the Railroad Representative, any of Licensee's equipment is unsafe for use, Licensee shall remove such equipment from Railroad's property. In addition, Licensee must ensure that the operators of all equipment are properly trained and competent in the safe operation of the equipment. In addition, operators must be:

- Familiar and comply with Railroad's rules on lockout/tagout of equipment.
- Trained in and comply with the applicable operating rules if operating any hy-rail equipment on-track.
- Trained in and comply with the applicable air brake rules if operating any equipment that moves rail cars or any other rail bound equipment.

B. All self-propelled equipment must be equipped with a first-aid kit, fire extinguisher, and audible back-up warning device.

C. Unless otherwise authorized by the Railroad Representative, all equipment must be parked a minimum of twenty-five (25) feet from any track. Before leaving any equipment unattended, the operator must stop the engine and properly secure the equipment against movement.

D. Cranes must be equipped with three orange cones that will be used to mark the working area of the crane and the minimum clearances to overhead powerlines.

V. General Safety Requirements

A. Licensee shall ensure that all waste is properly disposed of in accordance with applicable federal and state regulations.

B. Licensee shall ensure that all employees participate in and comply with a job briefing conducted by the Railroad Representative, if applicable. During this briefing, the Railroad Representative will specify safe work procedures, (including On-Track Safety) and the potential hazards of the job. If any employee has any questions or concerns about the work, the employee must voice them during the job briefing. Additional job briefings will be conducted during the work as conditions, work procedures, or personnel change.

C. All track work performed by Licensee meets the minimum safety requirements established by the Federal Railroad Administration's Track Safety Standards 49CFR213.

D. All employees comply with the following safety procedures when working around any railroad track:

(i) Always be on the alert for moving equipment. Employees must always expect movement on any track, at any time, in either direction.
(ii) Do not step or walk on the top of the rail, frog, switches, guard rails, or other track components.
(iii) In passing around the ends of standing cars, engines, roadway machines or work equipment, leave at least 20 feet between yourself and the end of the equipment. Do not go between pieces of equipment of the opening is less than one car length (50 feet).
(iv) Avoid walking or standing on a track unless so authorized by the employee in charge.
(v) Before stepping over or crossing tracks, look in both directions first.
(vi) Do not sit on, lie under, or cross between cars except as required in the performance of your duties and only when track and equipment have been protected against movement.

E. All employees must comply with all federal and state regulations concerning workplace safety.

Attached is your permit to finalize as follows:
Print out two complete originals, including all exhibits.
Execute and return the two originals to my address as indicated below.
There is no license fee.
I do not need to receive copies of your insurance certificates.
Return in overnight mail within 2 days in order to expedite return of your permit.

Lane County Department of Public Works

Facility Permit

Permit 140170

Type Road Construction

Applicaton Date	04/16/2014	
Issued	05/14/2014	Issued by Lemhouse, Brad
Field Inspection	05/13/2014	Inspected by Lemhouse, Brad
Permit Expires on	05/14/2015	Permitted activity must be completed prior to this expiration date.
Completed		

Please call Lane County Department of Public Works to arrange for an inspection when permitted activity is completed.

Location:

Township	Range	Section	1/4 Section	1/16 Section	TaxLot

Zone 1 Eugene

Access:

Owner:

Road E. 19TH AVE Road No. 182200 Begin Milepost 0.00

Applicant's Description of Work: CONSTRUCTION OF ENW GRAVITY SEWER PIPELINE ALONG E. 19TH AVE FOR THE CITY OF SPRINGFIELD FRANKLIN McVAY SANITARY SEWER EXTENSION PROJECT. INCLUDES INSTALLATION OF APPROX 875 FEET OF 12-INCH DIAMETER SANITARY SEWER PIPE AND MANHOLES IN E. 19TH AVE RIGHT OF WAY AND MODIFICATIONS TO THE NUGGET WAY PUMP STATION.

Applicant City of Springfield - Mark Van Eeckhout, P.E.

Address

225 FIFTH ST

SPRINGFIELD, OR 97478

Day Phone	541-736-1001
Eve Phone	
Cell Phone	
Fax	541-726-2309
email	

Owner City of Springfield - Mark Van Eeckhout, P.E.

Address

225 FIFTH ST

SPRINGFIELD, OR 97478

Day Phone	541-736-1001
Eve Phone	
Cell Phone	
Fax	541-726-2309
email	

Comments: Construct sewer line, road work, and traffic control as per plans by MSA Engineers/Planners of Springfield, Oregon for the City of Springfield's Franklin / McVay Sanitary Sewer Extension Project.

Contact Brad Lemhouse at 541-682-6928 two weeks prior to the road closure.

See pages 2, 3, and 4 for additional requirements.

Permit Specifications

A. This permit covers County road rights-of-way ONLY. The Permittee / Contractor shall keep one complete set of the issued permit on the project site until the permitted activity has been completed.

B. HOLD HARMLESS CLAUSE - The Permittee agrees that their performance under this permit is at their own sole risk and that they shall indemnify Lane County, its agents and employees, and hold them harmless from any and all liability for damages, costs, losses and expenses resulting from, arising out of, or in anyway connected with this permit, or from the Permittee's failure to perform fully hereunder, and the Permittee further agrees to defend Lane County, its agents and employees, against all suits, actions or proceedings brought by any third party against them for which the Permittee would be liable hereunder.

C. Permits may be terminated or suspended when the Permittee is found to have obtained a permit through misrepresentation of the facts or when, in the judgment of the Director of Public Works, terms of the permit are being violated or public safety is threatened or there is damage to the public roadway. Access permits shall remain in effect until a change in land use occurs. The County reserves the right to "revoke" or cancel the Permittee's permission to use the public right-of-way at any time. Permittee shall be responsible for the cost of design, installation or construction of additional roadway improvements and traffic control devices at any time in the future when the traffic volumes generated by the use for which the access permit is authorized necessitate such installation in the interest of public safety.

D. Separate permits may be required from federal, state or local agencies that have enacted regulations or ordinances regarding protection of the environment and preservation of natural resources. The Permittee is solely responsible for complying with said regulations or ordinances, if applicable. Issuance of this facility permit does not ensure that the applicants' proposed actions comply with the Federal Endangered Species Act, 16 U. S. C. 1531 et seq. (ESA), nor release the applicant from responsibilities or requirements under any other federal, state or local environmental statute, regulation or permit. In the event of differences or conflicts between the conditions of this facility permit and any such laws, rules or regulations, the more restrictive shall apply.

E. It is the responsibility of the Permittee to reestablish any survey monument moved, destroyed, etc., while working within county right-of-way. Re-establishment of survey monuments must be done by an approved registered surveyor and all costs will be borne by the Permittee.

F. Permittee guarantees all restoration work for a period of one year from the completion date. Permittee is responsible for future damage to public roadway caused by their permitted work.

G. Any sight posts, sign posts, or mailboxes that are removed will be replaced immediately in like condition in the same location and the area around them will be restored to a like or better condition.

H. All other areas such as lawns, ditch bottoms, etc., shall be reshaped and restored to at least original condition, with special attention being given to drainage ways and culverts. Permittee will be responsible for any mud, dirt, or debris from the roadway and right-of-way caused by this operation, leaving the roadway and area in a neat and acceptable condition.

I. Traffic control and safety procedures, such as signs and flaggers, are required whenever work is performed within the public right-of-way. All traffic control must adhere to the current Manual on Uniform Traffic Control Devices.

J. Permittee shall notify Lane County, Public Works Department, Permits Section, 48 hours before beginning work under this permit - (541)-682-6902. Prior approval for modifications to permit specifications is required.

K. Permittee shall notify Lane County, Public Works Department, Permits Section, for inspection of completed work prior to the expiration date - (541)-682-6902.

L. All excavation shall comply with the provisions of ORS 757.541 to 757.571. Notify all utility companies before doing any excavation (Call Oregon Utility Notification Center at 1-800-332-2344).

M. Underground utility facility operators, shall subscribe to the Oregon Utility Notification Center as described in ORS 757.557 (Call Oregon Utility Notification Center at 1-800-332-2344).

N. To secure approvals for private land use outside a road right-of-way, Applicant shall contact Lane County Land Management Division at (541) 682-3807, or the City or agency having jurisdiction.

Additional Requirements, specifications and provisions

A. Specifications are based on Oregon Department of Transportation (ODOT) Standard Specifications for Construction, current edition. References to the Specifications are noted.

B. Provide two weeks advance notice of the road closure. Place sign(s) at closure site two weeks prior to road closure with closure dates and times. Contact Lane County when signs are being placed on site, call Brad Lemhouse at 541-682-6928,

C. A 42" minimum cover will be maintained below the roadway surface or 30" below ditch flow line, whichever is lowest. All areas disturbed by placing of the cable, pipe or wire will be restored to a stable mechanically compacted condition.

D. Permittee is responsible for obtaining and maintaining all signing requirements. Advance warning signs are to be placed off the paved road, 6 to 12 feet from edge of pavement, at 5 to 7 feet above the road surface. They should be located so they are visible to passing traffic and should not obscure existing traffic control devices. No sign shall be mounted on existing County signposts. Use of freestanding A-frame supports is not allowed. However, Portable Sign Supports are allowed, for use with roll-up signs only, must be on the ODOT Qualified Products List in new or acceptable condition (current edition).

E. Seal surface over joints with tack material and sand. (Asphalt Concrete patch only)

F. All backfilled areas shall be mechanically compacted (whacker, vibratory rollers or pneumatic tampers). Compaction by wheel rollers, traffic, or water settlement will not be allowed.

G. Lane County reserves the right to suspend operations if the conditions of this permit are not being met. Permittee is required to immediately cease work after restoring right-of-way to an acceptable and safe condition as directed by County representative. Upon approval of County, operation may continue. Permittee shall be responsible for cost of any repair to County right-of-way.

H. Asphalt streets and driveways may be cut and reconstructed per ODOT Standard Specifications, Section 00405, Standard Drawing RD300 , RD302 or LC "T" cut, as attached and specified below:
a. Pipe zone to be constructed with ¾-inch or 1-inch Class B or Class E Backfill. Aggregate is to be from an ODOT approved source. Maximum depth of Pipe Zone material is to conform to Table A, RD300. Class B backfill maximum compacted lift of 6-inches mechanically compacted to 95% of AASHTO T180, T224 1996 version.
b. Trench backfill area to be constructed with Class E Backfill to the bottom of the proposed resurfacing. Placement of CLSM to conform to ODOT Standard Specifications, Section 00405.46(c-3).
c. CLSM to have a compressive strength of 150-250 PSI.
d. "T" cut all trench edges a minimum of 6-inches from edge of undisturbed base. In area of any undermined or damaged surfacing, re-saw to a minimum of 6-inches outside these areas. Saw cut is to be parallel to pipe centerline. All asphalt edges are to be tacked with liquid asphalt and sand sealed.
e. Arterial and Collector roads must be milled and filled as shown on LC "T" cut (see attached).
f. Permittee to contact County at (541)-682-6902 a minimum of 24 hours after saw cut and prior to paving for approval of surface restoration.
g. Pave road surface with minimum of 4-inches, or match existing whichever is greater, of State Level 3, 1/2-inch Dense Graded Hot Mixed Asphalt Concrete (HMAC) as approved by Lane County. Maximum compacted lift of 3 inches mechanically compacted to 92% of AASHTO T209.

I. The road shoulder and gravel road surface will be reconstructed per ODOT Standard Specifications, Section 00405, Oregon Standard Drawing RD300 (Trench Backfill, Bedding, Pipe Zone and Multiple Installations), as specified below:
a. Pipe zone, trench backfill and road surface is to be constructed with ¾-inch or 1 inch Class “B” backfill. Aggregate is to be from an ODOT approved aggregate source. Material is to be placed in maximum lifts of 6 inches in the pipe zone and 2 feet in the trench backfill. It is to be mechanically compacted to 95% relative density as determined by AASHTO T180, T@@$ 1996 version..
b. Surface area is to be shaped to match surrounding existing grade.
c. The gravel road shoulder is to be shaped in a continous slope from the edge of the roadway to the bottom of the ditch, suitable for mowing.

J. The ditch and back of ditch area will be reconstructed per ODOT Standard Specifications, Section 00405, Oregon Standard Drawing RD300 (Trench Backfill, Bedding, Pipe Zone and Multiple Installations), as specified below:
a. The ditch and back of ditch area is to be constructed with Class “A” excavated native material. Material is to be mechanically compacted to ensure no settlement or displacement.
b. All material in excess of 4-inches diameter is to be removed from surface.
c. Surface area is to be shaped to match surrounding existing grade and is to be left in a condition suitable for mechanical vegetation maintenance.
d. All disturbed areas are to be mulched and seeded per ODOT Section 01040.

K. Compaction on all longitudinal trenches is to be tested by Lane County Materials Lab or an approved testing company or agency.

L. Furnish a workable Commercial Grade Concrete (CGC) that is uniform in composition and consistency. It must have the following charastics: (a) Entrained Air - 3.5% to 6.5%; (b) Slump - 5 inches or less; (c) Compressive Strength - Minimum 3,600 psi at 28 days; (d) Temperature - Minimum 50 degrees F.

M. Use Best Management Practices (BMPs) for erosion control during construction.

N. Replacement of all impacted pavement markings is to be in conformance to ODOT Standards and the material is to be from the Quality Product List (QPL).

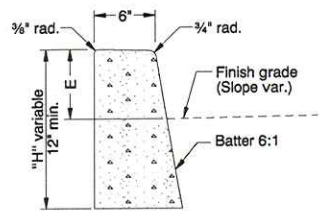

O.D.O.T. & City of Portland Standard "H"=16"
STANDARD CURB

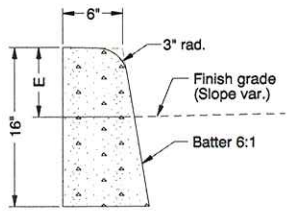

MOUNTABLE CURB

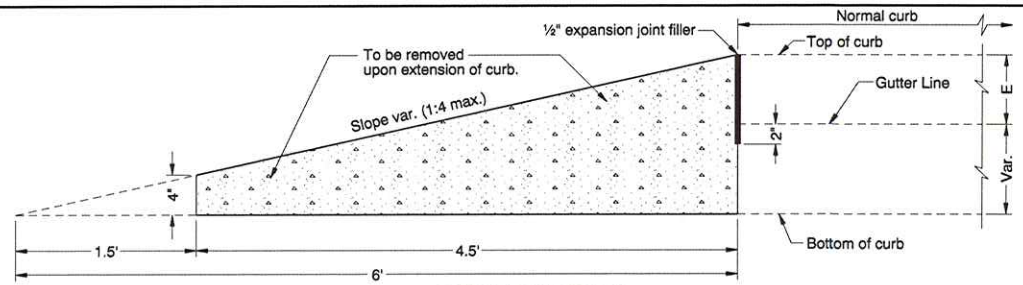

CURB ENDING DETAIL

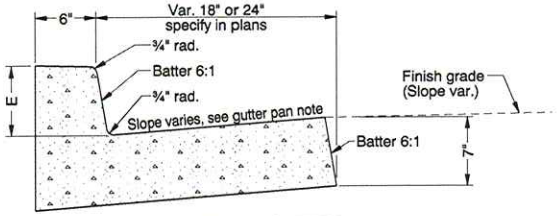

CURB AND GUTTER

GUTTER PAN NOTES:
Slope 8% normal.
Use 5% slope for gutter width greater than 24".
Slope 4% at ramps. Vary slope as reqd. for drainage.
Vary where shown on plans, and allowed by jurisdiction.

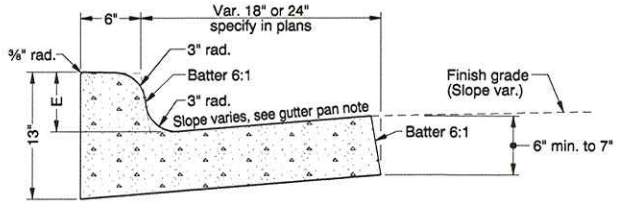

MOUNTABLE CURB AND GUTTER

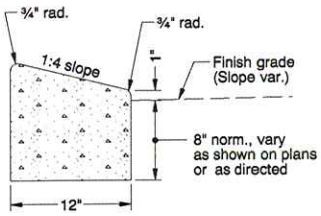

LOW PROFILE
MOUNTABLE CURB

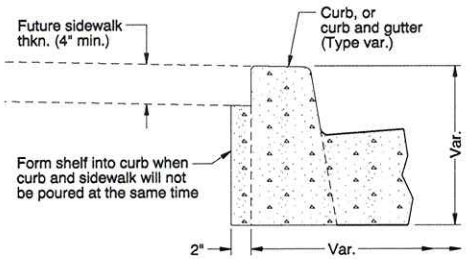

MODIFICATION FOR KEYWAY
(Where shown on plans)

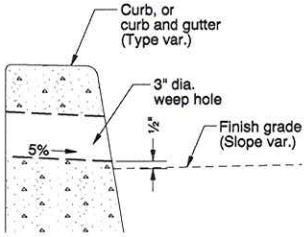

WEEP HOLE DETAIL
(Where shown on plans, and allowed by jurisdiction)

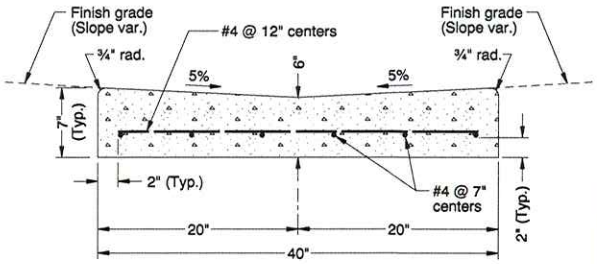

VALLEY GUTTER

CALC. BOOK NO. N/A

BASELINE REPORT DATE 30-JUN-2009

GENERAL NOTES FOR ALL DETAILS:

1. Curb exposure "E" = 6" to 9", as measured vertically from flowline to highest point on curb. Vary as shown on plans or as directed. O.D.O.T standard "E"=7".
2. Const. expansion joints at 200' maximum spacing, and at points of tangency, and at ends of each driveways.
3. Const. contraction joints at 15' maximum spacing, and at ends of each inlet and ramp.
4. Transitions shall be used to connect curbs of different exposures "E". ("E" Is the total vertical dimension of those curb surfaces having a slope of 1:1 or steeper). Minimum desirable transition length shall be 20' for each 1" difference in "E".
5. Tops of all curbs shall slope toward the roadway at 2% normal, unless otherwise shown, or as directed.
6. Dimensions are nominal, vary to conform with curb machine approved by the engineer.
7. Dimensions adjacent to radii are measured to the point of intersection of curb surfaces.
8. For sidewalk details, and monolithic curb & sidewalk, see Std. Drg. RD720.
9. For drainage curbs, see Std. Drg. RD701.

The selection and use of this Standard Drawing, while designed in accordance with generally accepted engineering principles and practices, is the sole responsibility of the user and should not be used without consulting a Registered Professional Engineer.

NOTE: All material and workmanship shall be in accordance with the current Oregon Standard Specifications

OREGON STANDARD DRAWINGS

CURBS

2008

DATE	REVISION DESCRIPTION
07-2009	REVISED DETAILS & NOTES

Effective Date: December 1, 2011 - May 31, 2012

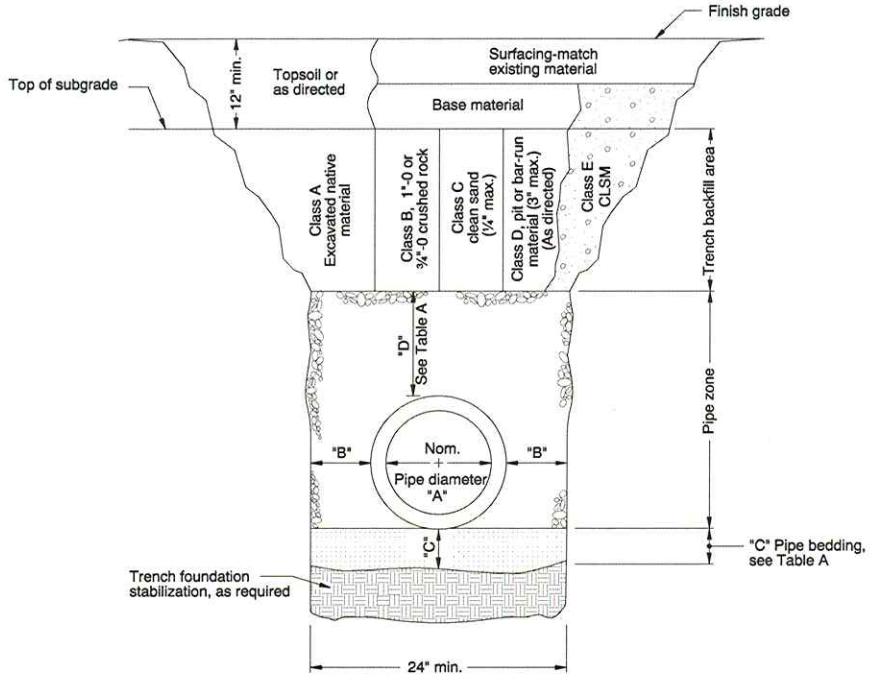

MULTIPLE INSTALLATIONS

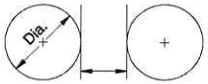

DIAMETER	MIN. SPACE BETWEEN PIPES
Up to 48"	24"
48" to 72"	One half (½) dia. of pipe

TABLE A

"A" (in)	"B" (in)	"C" (in)	"D" (in)
4	10	4	8
6	10	4	8
8	10	6	10
10	10	6	10
12	12	6	10
15	12	6	10
18	16	6	12
21	16	6	12
24	18	6	12
30	18	6	12
36	24	6	14
42	24	6	14
48	24	6	14
54	24	6	14
60	24	6	14
66	24	6	14
72	24	6	14

For pipes over 72" diameter, see general note 3.

GENERAL NOTES FOR ALL DETAILS:

1. Surfacing of paved areas shall comply with street cut Std. Drg. RD302.
2. For pipe installation in embankment areas where the trench method will not be used and the pipe is ≥ 36" diameter, increase dimension "B" to nominal pipe diameter.
3. Pipes over 72" diameter are structures, and are not applicable to this drawing.
4. See Std. Drg. RD336 for tracer wire details (When required).

CALC. BOOK NO. N/A

BASELINE REPORT DATE 18-DEC-2009

NOTE: All material and workmanship shall be in accordance with the current Oregon Standard Specifications

The selection and use of this Standard Drawing, while designed in accordance with generally accepted engineering principles and practices, is the sole responsibility of the user and should not be used without consulting a Registered Professional Engineer.

OREGON STANDARD DRAWINGS

TRENCH BACKFILL, BEDDING, PIPE ZONE AND MULTIPLE INSTALLATIONS

2008

DATE	REVISION DESCRIPTION
06-2009	ADDED AND REVISED NOTES
12-2009	ADDED AND REVISED NOTES

rd300.dgn 31-DEC-2009

RD300

LANE COUNTY

"T"-CUT

FOR COLLECTOR AND ARTERIAL ROADS

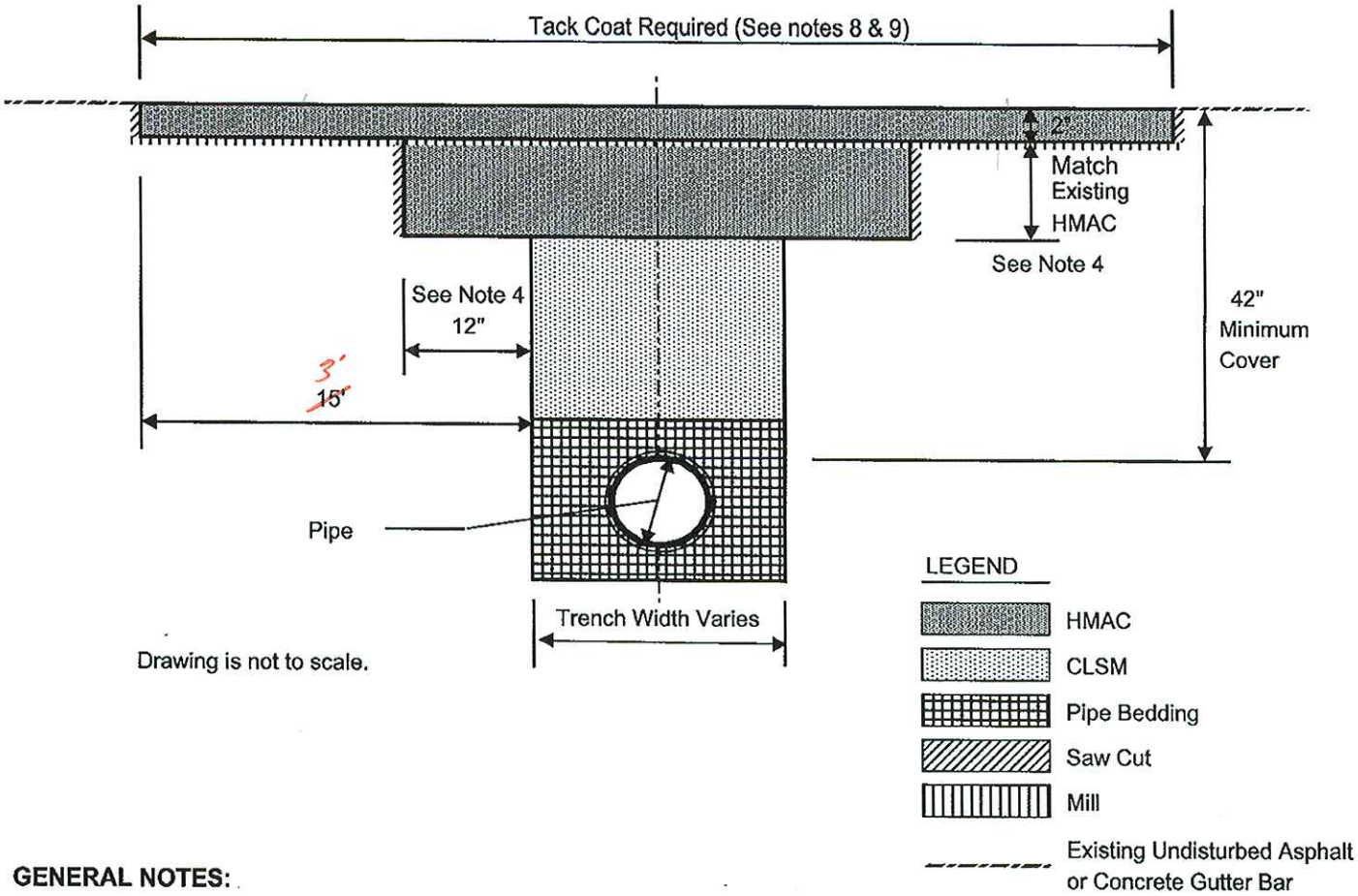

GENERAL NOTES:

1. See Std. Dwg. RD300 for Trench Backfill, Bedding, Pipe Zone and Multiple Installations.
2. See Std. Dwg. RD302 for Street Cuts on Local and Residential roads.
3. Controlled Low Strength Materials (CLSM) backfill material is required unless otherwise directed.
4. 12 inch "T" Cut requirement may be waived when CLSM backfill is used.
5. Joints in the travel lane are to be at the curb & gutter and/or at the nearest longitudinal joint outside a wheel path.
6. All cuts in pavement shall be full depth saw cuts. A minimum compacted thickness of 2 inches or the thickness of the removed pavement, whichever is greater. Pavement to be compacted in 2 inch lifts.
7. Cut areas shall be cold patched at the end of the workday and the patch maintained. Cold patched areas shall be hot patched within 10 days. All cold patch material shall be excavated prior to hot patch restoration.
8. Pavement grinding shall conform to Oregon Standard Specifications for Construction, Section 00620, Cold Plane Pavement Removal. Pavement surface shall be uniformly milled using equipment that is capable of accurately establishing profile grades within a tolerance of 1/4" by reference from either the existing pavement or independent grade control.
9. Asphalt emulsion tack coat shall be used to seal the asphalt to the edges of the existing asphalt. All cut areas shall be sealed with an ODOT approved polymer asphalt sealant.
10. All existing pavement markings and legends are to be restored with like kind.
11. The road shoulder and pavement edge shall be restored to match the previous condition.
12. Applicant shall accept responsibility for pavement stress or settlement of the "T" Cut restoration section for a period of 1 year.

APPENDIX C
Record Drawings

<u>NOTE:</u>

THE VERTICAL AND HORIZONTAL DATUMS SHOWN ON THE AS-BUILT DRAWINGS MAY BE DIFFERENT THAN THE DATUMS USED ON THE PROJECT DRAWINGS.

GLENWOOD WASTEWATER TRUNK PIPE

FRANKLIN BOULEVARD AND MCVAY HIGHWAY

SPRINGFIELD, LANE COUNTY, OREGON

JUNE, 2004

GENERAL CONSTRUCTION NOTES

1. ALL MATERIALS AND WORKMANSHIP WITHIN THE PUBLIC RIGHT-OF-WAY OR PUBLIC EASEMENTS SHALL MEET CITY OF SPRINGFIELD DEPARTMENT OF PUBLIC WORKS "STANDARD CONSTRUCTION SPECIFICATIONS, 1994" AS AMENDED IN 1998 (OR CURRENT ADDITION), THE SPECIAL PROVISIONS, AND OREGON DEPARTMENT OF TRANSPORTATION "OREGON STANDARD SPECIFICATIONS FOR CONSTRUCTION" 2002 EDITION.
2. OREGON LAW REQUIRES THE CONTRACTOR TO FOLLOW RULES ADOPTED BY THE OREGON UTILITY NOTIFICATION CENTER. THOSE RULES ARE SET FORTH IN OAR 952-001-0010 THROUGH OAR 952-001-0100. THE CONTRACTOR MAY OBTAIN COPIES OF THE RULES BY CALLING THE CENTER. NOTE: THE PHONE NUMBER IS (503) 232-1987.
3. LOCATION AND/OR DEPTH OF EXISTING UTILITIES SHOWN ON PLANS ARE APPROXIMATE. IT IS THE CONTRACTOR'S RESPONSIBILITY TO CONTACT ALL UTILITY COMPANIES FOR UNDERGROUND LOCATION OF FACILITIES AT LEAST 48 HOURS PRIOR TO EXCAVATING OR "POTHOLING". THE "ONE-CALL" NUMBER IS (800) 332-2344. IN ADDITION, UNION PACIFIC COMMUNICATIONS DEPTARTMENT MUST BE CONTACTED IN ADVANCE OF ANY WORK WITHIN THE U.P. RAILROAD R/W. PHONE 1-800-336-9193.
4. CONTRACTOR SHALL BE RESPONSIBLE FOR COORDINATION WITH UTILITY COMPANIES ON THE TIMING OF INSTALLATION OF THEIR FACILITIES.
5. SPRINGFIELD CODE 10.2.1 REQUIRES NOTIFICATION OF OPEN TRENCHING FOR THE PROJECT TO ALLOW POSSIBLE AT&T CABLE INSTALLATION. AT&T TO APPLY FOR ODOT UTILITY PERMIT.
6. THE CONTRACTOR SHALL PROVIDE ALL TRAFFIC CONTROL DEVICES NECESSARY TO PROTECT AND SAFEGUARD THE PUBLIC AND WORKERS AGAINST INJURY AND PROTECT THE WORK AGAINST DAMAGE. ALL TEMPORARY TRAFFIC CONTROL SIGNING AND DEVICES SHALL BE IN PLACE PRIOR TO BEGINNING WORK. ALL TRAFFIC CONTROL SHALL CONFORM TO THE MANUAL ON UNIFORM TRAFFIC CONTROL DEVICES FOR STREETS AND HIGHWAYS (MUTCD), CURRENT EDITION, AS SUPPLEMENTED AND AMENDED BY THE OREGON SUPPLEMENTS, AND BY ODOT GUIDELINES. FLAGGING SHALL BE PERFORMED AS SHOWN IN THE OREGON STATE HIGHWAY DIVISION HANDBOOK, "SIGNING AND FLAGGING STANDARDS FOR SHORT-TERM WORK ZONES", CURRENT EDITION. THE CONTRACTOR SHALL BE RESPONSIBLE FOR ANY REQUIRED TRAFFIC CONTROL AS FIELD CONDITIONS WARRANT. THE CONTRACTOR SHALL SUBMIT A TRAFFIC CONTROL PLAN FOR EACH STAGE OF WORK AT LEAST TWO WEEKS PRIOR TO THE PRE-CONSTRUCTION CONFERENCE FOR CITY AND ODOT REVIEW AND APPROVAL.
7. ALL SANITARY AND STORM SEWER CONNECTIONS TO EXISTING CITY OWNED FACILITIES (PIPE, CATCH BASINS, MANHOLES, ETC.) SHALL BE INSPECTED BY THE CONTRACTOR, AND THE ENGINEER PRIOR TO HOOK-UP, AND BY THE CITY'S PUBLIC WORKS MAINTENANCE DEPARTMENT PRIOR TO BACKFILLING OF TRENCH. CONTACT RON SATHER (726-2240) NO LESS THAN 48 HOURS PRIOR TO DESIRED INSPECTION TIME.
8. BEFORE BACK-FILLING THE END OF A MAINLINE PIPE, NOT ENDING AT A MANHOLE OR A CLEAN OUT, THE CONTRACTOR SHALL PERFORM THE TV INSPECTION AS REQUIRED BY THE STANDARD SPECIFICATIONS AND ALLOW THE ENGINEER TO DETERMINE THE EXACT LOCATION AND ELEVATION OF THE END OF THE PIPE.
9. WHERE CONNECTING TO AN EXISTING PIPE, THE CONTRACTOR SHALL EXPOSE THE END OF THE EXISTING PIPE AND ALLOW THE ENGINEER TO VERIFY EXACT LOCATION AND ELEVATION, CONDITION, AND POSITIVE FLOW BEFORE LAYING ANY NEW PIPE ON THAT SYSTEM.
10. THE SEWER GRADE SHALL BE PER THE PLAN SPECIFICATIONS AND WITH THE MINIMUM COVER AS SHOWN ON THE PLANS.
11. THE CONTRACTOR SHALL INTERNALLY TELEVISION INSPECT THE SEWER AFTER ALL BACKFILL. THE CONTRACTOR SHALL SUPPLY THE CITY WITH A WRITTEN T.V. REPORT AND VIDEO TAPE FOR CITY APPROVAL AT LEAST 2 WORKING DAYS BEFORE THE PRE-PAVING MEETING.
12. CONTRACTOR TO SCHEDULE A PRE-PAVING CONFERENCE 24 HOURS PRIOR TO PAVING. CONTACT RON SATHER (726-2240). PAVEMENT RESTORATION FOR ALL PIPE TRENCHES TO BE "T" CUT PER DETAIL ON SHEET 11.
13. ALL JOINTS BETWEEN EXISTING AND NEW ASPHALT PAVING SHALL BE SEALED WITH POLYMERIZED ASPHALT AND SANDED TO PREVENT PICK UP.
14. COMPACTION REQUIREMENTS:

LAYER	RATE	TEST
SUBGRADE AND GRANULAR TRENCH BACKFILL	95%	T99
CRUSHED ROCK	95%	T180
ASPHALT (LOCAL)	90%	RICE
ASPHALT (COLLECTOR/ARTERIAL)	92%	RICE

15. EARTHWORK OUTSIDE THE RIGHT OF WAY AND PUBLIC EASEMENTS IN EXCESS OF 50 CUBIC YARDS REQUIRES A LAND AND DRAINAGE ALTERATION PERMIT (LDAP).
16. A PRE-CONSTRUCTION CONFERENCE IS REQUIRED BEFORE START OF CONSTRUCTION. ALL UTILITIES, CONTRACTORS, AND CITY AND ODOT REPRESENTATIVES SHALL HAVE RECEIVED THE FINAL APPROVED PLANS AT LEAST 5 WORKING DAYS PRIOR TO THE PRE-CONSTRUCTION CONFERENCE.
17. THE ENGINEER AND/OR CITY HAVE THE RIGHT TO REQUIRE ADDITIONAL WORK NOT SHOWN HEREIN BUT NECESSARY FOR THE SUCCESSFUL COMPLETION OF THE PROJECT.
18. REQUESTS BY THE CONTRACTOR FOR CHANGES SHALL BE APPROVED BY THE ENGINEER, ODOT, AND THE CITY PRIOR TO IMPLEMENTATION.
19. CONTRACTOR SHALL SUBMIT EVIDENCE OF INSURANCE IN ACCORDANCE WITH THE STANDARD SPECIFICATION TO THE CITY FOR APPROVAL PRIOR TO BEGINNING WORK. CONTRACTOR TO PROVIDE ODOT WITH LIABILITY INSURANCE AND BOND PRIOR TO RECEIVING ODOT PERMIT.
20. ANY DISCREPANCIES FOUND BETWEEN THE DRAWINGS AND SPECIFICATIONS AND SITE CONDITIONS OR ANY INCONSISTENCIES, AMBIGUITIES, ERRORS OR OMISSIONS IN THE DRAWINGS OR SPECIFICATIONS SHALL BE IMMEDIATELY REPORTED TO THE ENGINEER. WORK PERFORMED BY THE CONTRACTOR AS A RESULT OF ANY DISCREPANCIES, INCONSISTENCIES, AMBIGUITIES, ERRORS OR OMISSIONS IN THE DRAWINGS OR SPECIFICATIONS WHEN SUCH DISCREPANCIES, INCONSISTENCIES, AMBIGUITIES, ERRORS OR OMISSIONS IS NOT CALLED TO THE ATTENTION OF THE ENGINEER SHALL BE AT THE CONTRACTOR'S EXPENSE.
21. QUANTITIES SHOWN ON DRAWINGS ARE APPROXIMATE, CONTRACTOR SHALL VERIFY BEFORE ORDERING.
22. BENCHMARK USED: LANE COUNTY BENCHMARK 121, DESIGNATION N 732. DATUM: NAVD 88. ELEVATION U.S. FEET: 437.20. NAVD 29 DATUM IN METERS = 1.103. BASE MAPPING NOTE: BASE MAP WAS OBTAINED FROM ftp://ftp.ci.springfield.or.us/outgoing/Franklin_Blvd_Project/Belshiser_Hubbard/fcdrt.dwg. THE .dwg FILE WAS SCALED FROM METRIC UNITS TO ENGLISH UNITS AND CHECKED FOR ACCURACY. ADDITIONAL TOPOGRAPHIC DATA WAS THEN ADDED TO THE FILE, USING THE fcdrt.dwg FILE AS THE BASIS OF BEARING.

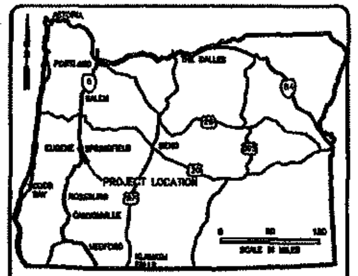

PROJECT LOCATION
OREGON

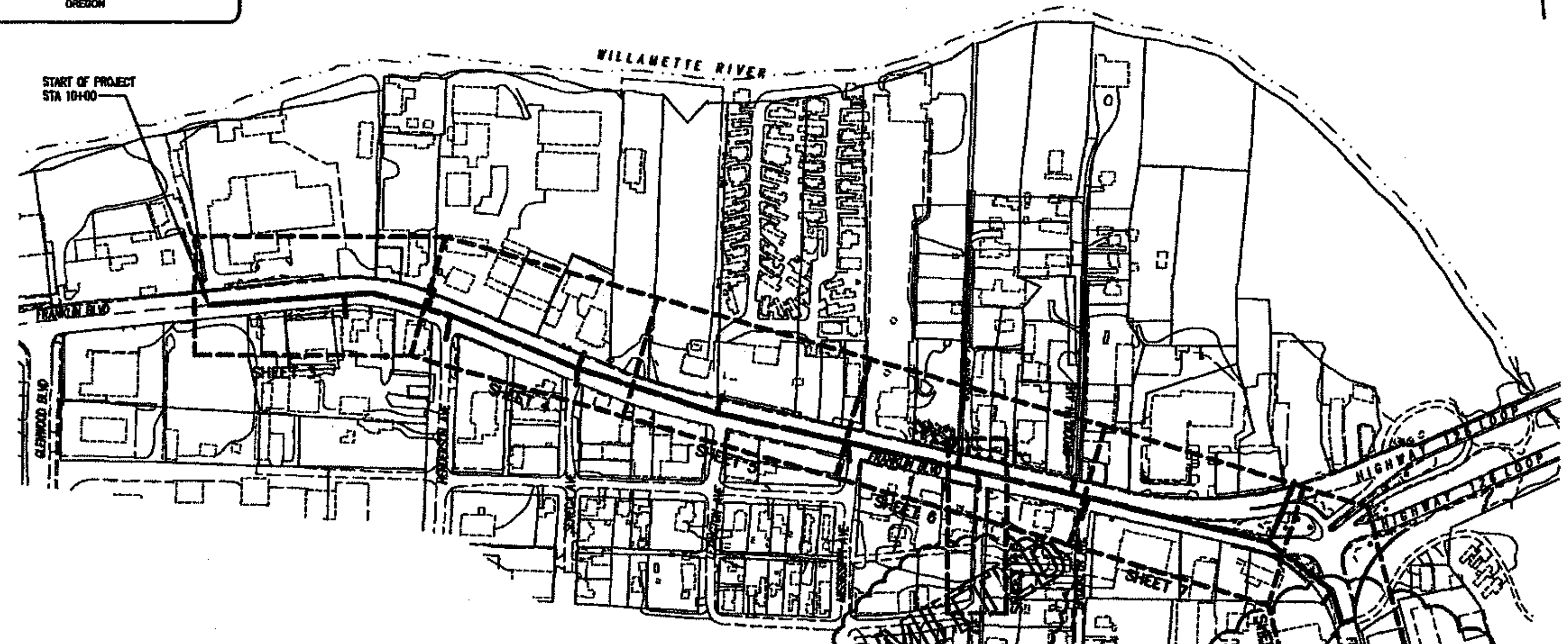

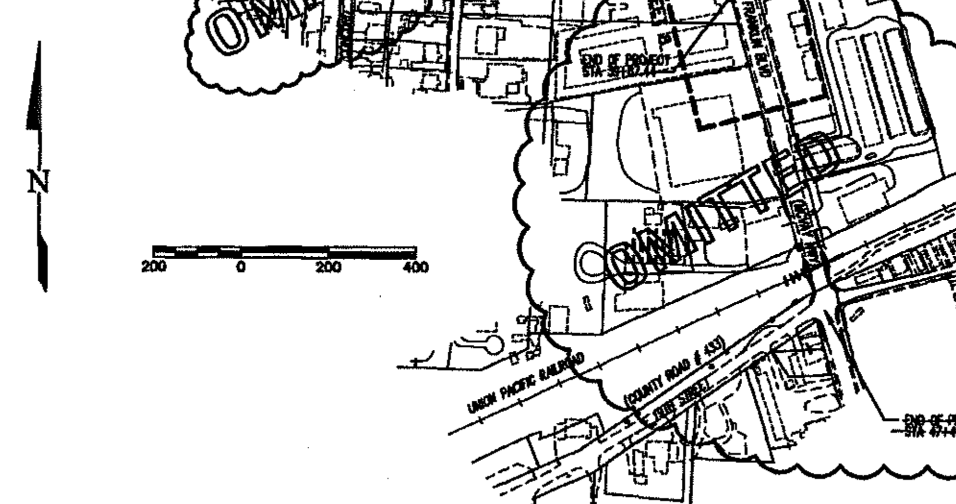

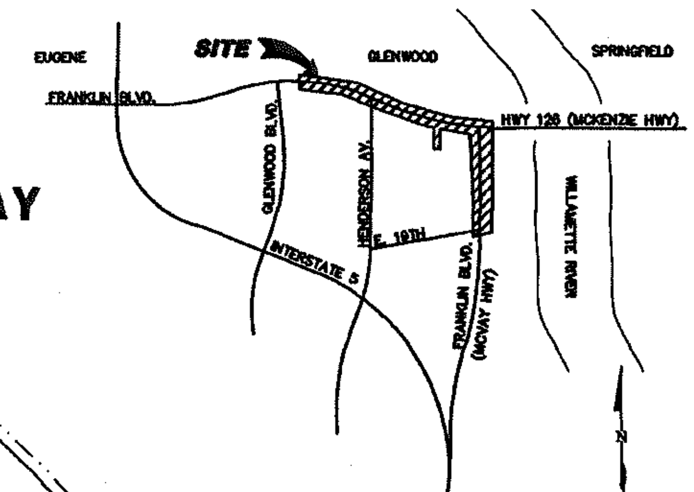

VICINITY MAP
N.T.S.

CIVIL SHEET INDEX

C1. COVER SHEET
C2. OVERALL PLAN
C3. PLAN AND PROFILE SHEET STA 10+00 TO 15+40
C4. PLAN AND PROFILE SHEET STA 15+40 TO 21+00
C5. PLAN AND PROFILE SHEET STA 21+00 TO 26+40
C6. PLAN AND PROFILE SHEET STA 26+40 TO 31+70
C7. PLAN AND PROFILE SHEET STA 31+70 TO 37+00
C8. PLAN AND PROFILE SHEET STA 37+00 TO 42+40
C9. ~~PLAN AND PROFILE SHEET STA 42+40 TO END~~ OMITTED
C10. ~~PLAN AND PROFILE SHEET CONCORD AVENUE~~ OMITTED
C11. DETAILS

TRAFFIC CONTROL SHEET INDEX

T1. WORK ZONE VICINITY PLAN
T2. WORK ZONE 1 TYPICAL
T3. WORK ZONE 2 TYPICAL
T4. WORK ZONE 3 TYPICAL
T5. WORK ZONE 4 TYPICAL
T6. WORK ZONE 5 TYPICAL
T7. WORK ZONE 6 TYPICAL
T8. DETOUR PLAN

DESIGN TEAM

CIVIL ENGINEER
EGR & ASSOCIATES, INC.
25358 PRAIRIE ROAD
EUGENE, OREGON 97402

GEOTECHNICAL ENGINEER
GEODESIGN, INC.
14945 SW SEQUOIA PKWY SUITE 170
PORTLAND, OREGON 97224

SURVEYING
PACIFIC SURVEYING, INC.
73506 BLUE MOUNTAIN SCHOOL ROAD
COTTAGE GROVE, OREGON 97424

TRAFFIC ENGINEER
JRH ENGINEERS
4765 VILLAGE PLAZA LOOP
SUITE 201
EUGENE, OREGON 97401

LEGEND

- EXISTING FENCE
- EXISTING STORM LINE
- EXISTING WASTEWATER LINE
- EXISTING WATER LINE
- EXISTING TELEPHONE SERVICE LINE
- EXISTING ELECTRIC SERVICE LINE
- EXISTING GAS LINE
- 30"WW — PROPOSED WASTEWATER LINE
- *EXISTING POWER POLE*
- ST — EXISTING STORM MANHOLE
- EXISTING WASTEWATER MANHOLE
- PROPOSED WASTEWATER MANHOLE
- *EXISTING CURB INLET*
- EXISTING WATER METER
- EXISTING FIRE HYDRANT
- EXISTING WATER VALVE
- EXISTING LIGHT POLE
- EXISTING POLE
- EXISTING LIGHT POLE
- EXISTING CATCH BASIN
- EXISTING POLE
- EXISTING POWER POLE
- EXISTING SHRUB
- EXISTING TELEPHONE POLE
- EXISTING UTILITY BOX
- EXISTING TRAFFIC LANE MARKER
- B-1 — EXPLORATORY BORE HOLE LOCATION USING HOLLOW-STEM AUGER DRILLING
- AT-2 — EXPLORATORY BORE HOLE LOCATION USING AIR-TRACK DRILLING
- *BASE COORDINATE TABLE POINT*
- EXISTING TREE

EGR & Associates, Inc
Engineers and Geologists
25358 Prairie Road
Eugene, Oregon 97402
(541) 688-8322
Fax (541) 688-8087

REGISTERED PROFESSIONAL ENGINEER
15376
OREGON
May 30, 19
CLINT L. BEECROFT
For Reference Only
RENEWS: 01-01-2006

GLENWOOD WW TRUNK PIPE
PUBLIC IMPROVEMENT PLANS
AS-BUILT DRAWINGS
COVER SHEET

SPRINGFIELD, OREGON

No	Description of Revisions	Date	Name
1	ADDENDUM #2	6/15/04	CLB
2	OMIT DEEP OPTION DATA & WW PIPE STA 39+87.44 TO END	8/30/04	CLB
3	REVISE LATERAL-SHT C7	9/8/04	CLB
4	CHANGE ORDER #3-MOVE M.H. 8	11/10/04	CLB
5	AS-BUILT RECORD DRAWINGS	8/22/05	CLB

Date	02-18-2005
Job Number	5497-03-0052
Design by	D. OLMSTEAD
Drawn by	J. SCHULTZ
Checked by	C. BEECROFT

Sheet Number

C1 OF 11

CITY PROJECT NUMBER P20278

Main File

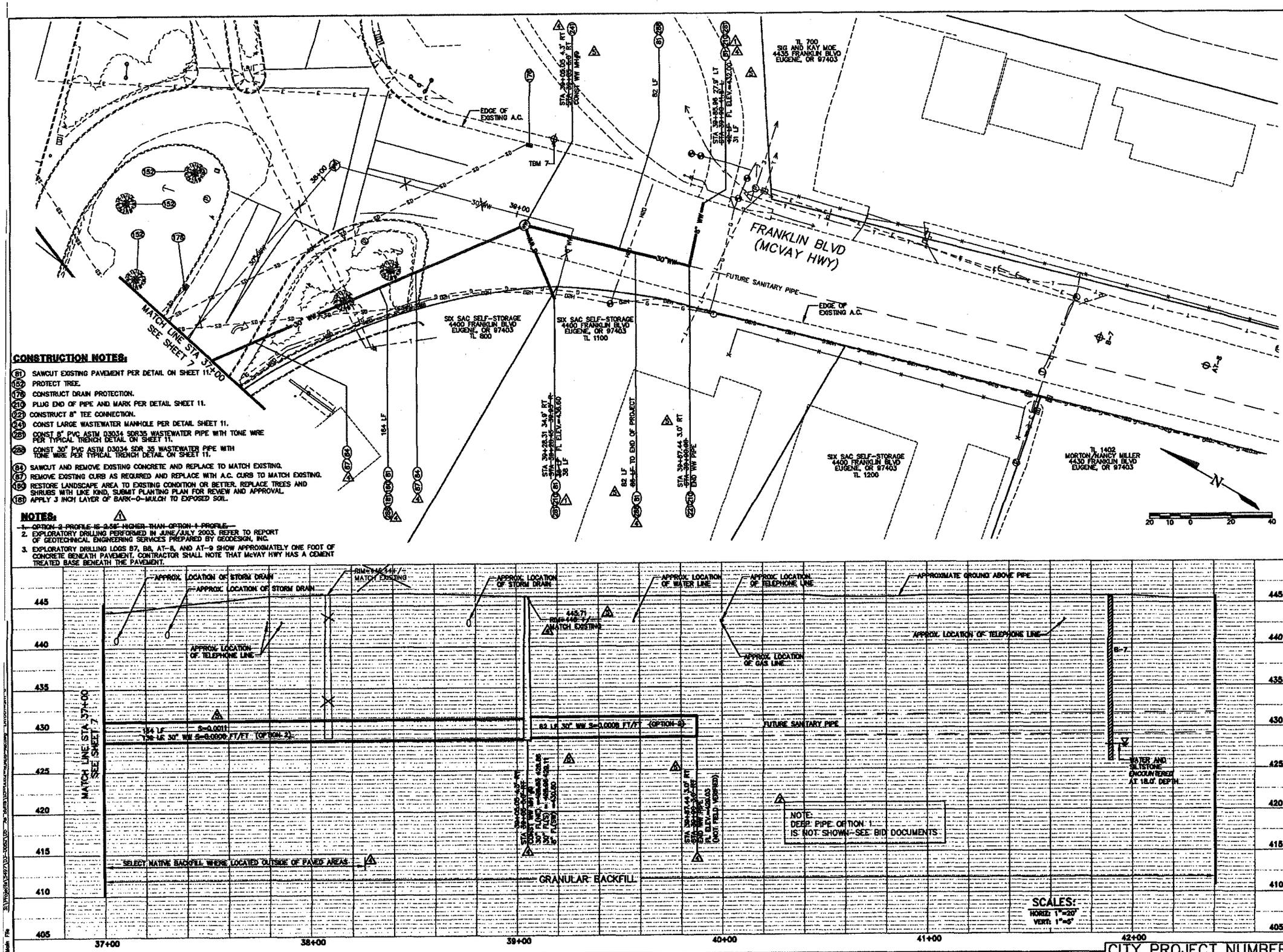

CONSTRUCTION NOTES:

(81) SAWCUT EXISTING PAVEMENT PER DETAIL ON SHEET 11.
(152) PROTECT TREE.
(176) CONSTRUCT DRAIN PROTECTION.
(210) PLUG END OF PIPE AND MARK PER DETAIL SHEET 11.
(221) CONSTRUCT 8" TEE CONNECTION.
(246) CONST LARGE WASTEWATER MANHOLE PER DETAIL SHEET 11.
(261) CONST 8" PVC ASTM D3034 SDR35 WASTEWATER PIPE WITH TONE WIRE PER TYPICAL TRENCH DETAIL ON SHEET 11.
(262) CONST 30" PVC ASTM D3034 SDR 35 WASTEWATER PIPE WITH TONE WIRE PER TYPICAL TRENCH DETAIL ON SHEET 11.
(84) SAWCUT AND REMOVE EXISTING CONCRETE AND REPLACE TO MATCH EXISTING.
(87) REMOVE EXISTING CURB AS REQUIRED AND REPLACE WITH A.C. CURB TO MATCH EXISTING.
(180) RESTORE LANDSCAPE AREA TO EXISTING CONDITION OR BETTER. REPLACE TREES AND SHRUBS WITH LIKE KIND. SUBMIT PLANTING PLAN FOR REVIEW AND APPROVAL.
(181) APPLY 3 INCH LAYER OF BARK-O-MULCH TO EXPOSED SOIL.

NOTES:

1. ~~OPTION 2 PROFILE IS 2.56' HIGHER THAN OPTION 1 PROFILE.~~
2. EXPLORATORY DRILLING PERFORMED IN JUNE/JULY 2003. REFER TO REPORT OF GEOTECHNICAL ENGINEERING SERVICES PREPARED BY GEODESIGN, INC.
3. EXPLORATORY DRILLING LOGS B7, B8, AT-8, AND AT-9 SHOW APPROXIMATELY ONE FOOT OF CONCRETE BENEATH PAVEMENT. CONTRACTOR SHALL NOTE THAT McVAY HWY HAS A CEMENT TREATED BASE BENEATH THE PAVEMENT.

CITY PROJECT NUMBER P20278

EGR & Associates, Inc.
Engineers and Geologists
25338 Prairie Road
Eugene, Oregon 97402
(541) 686-8322
Fax (541) 686-8067

REGISTERED PROFESSIONAL ENGINEER 15373 OREGON JULY 20, 1990 CLINT L. BEECROFT
RENEWS: 01-01-2006

For Review Only

GLENWOOD WW TRUNK PIPE
PUBLIC IMPROVEMENT PLANS
AS-BUILT DRAWINGS
PLAN AND PROFILE
STA 37+00 TO STA 42+40
SPRINGFIELD, OREGON

No	Description of Revisions	Date	Name
1	ADDENDUM #2	6/15/04	CLB
2	OMIT DEEP OPTION DETL & WW PIPE STA 38+57.44 TO END	8/30/04	CLB
3	REVISE LATERAL-SHT C7	9/8/04	CLB
4	CHANGE ORDER #2-MOV. A.H. 9	11/10/04	CLB
5	AS-BUILT RECORD DRAWINGS	8/22/06	CLB

Date	02-18-2005
Job Number	5497-03-0052
Design by	D. OLMSTEAD
Drawn by	J. SCHULTZ
Checked by	C. BEECROFT

Sheet Number

C8 OF 11

WILDISH WASTEWATER GRAVITY SYSTEM

ASSESSOR'S MAP NO.'S 18-03-02 2, 18-03-03 11 & 18-03-03 14

SCALE: 1" = 100'

0 25 50 100 150 200

SCALE IS IN FEET

LEGEND

- WASTEWATER GRAVITY LINE
- WASTEWATER PRESSURE LINE
- STM — EXISTING STORM LINE
- E — EXISTING ELECTRIC
- W — EXISTING WATER
- G — EXISTING GAS
- P — EXISTING PHONE

NOTE:

℄ SHOWN DENOTES THE RIGHT-OF-WAY CENTERLINE. STATIONS AND PIPE OFFSETS ARE BASED ON THE ℄ OF THE RIGHT-OF-WAY, NOT THE ℄ OF PAVING.

CITY OF EUGENE INSPECTOR: G. FEE, R. WEEHUNT, J. STIGALL
CITY PROJECT NO.: 3487
CITY OFFICE FILE NO.: 99-506
AS-BUILT BY D. SCHWIN 1/11/2000
CONTRACTOR: WILDISH CONSTRUCTION CO.
OWNER: WILDISH INDUSTRIAL DEVELOPMENT CORP.
CITY APPROVAL: P. KEPPLER, L. PEDERSON 3/17/1999

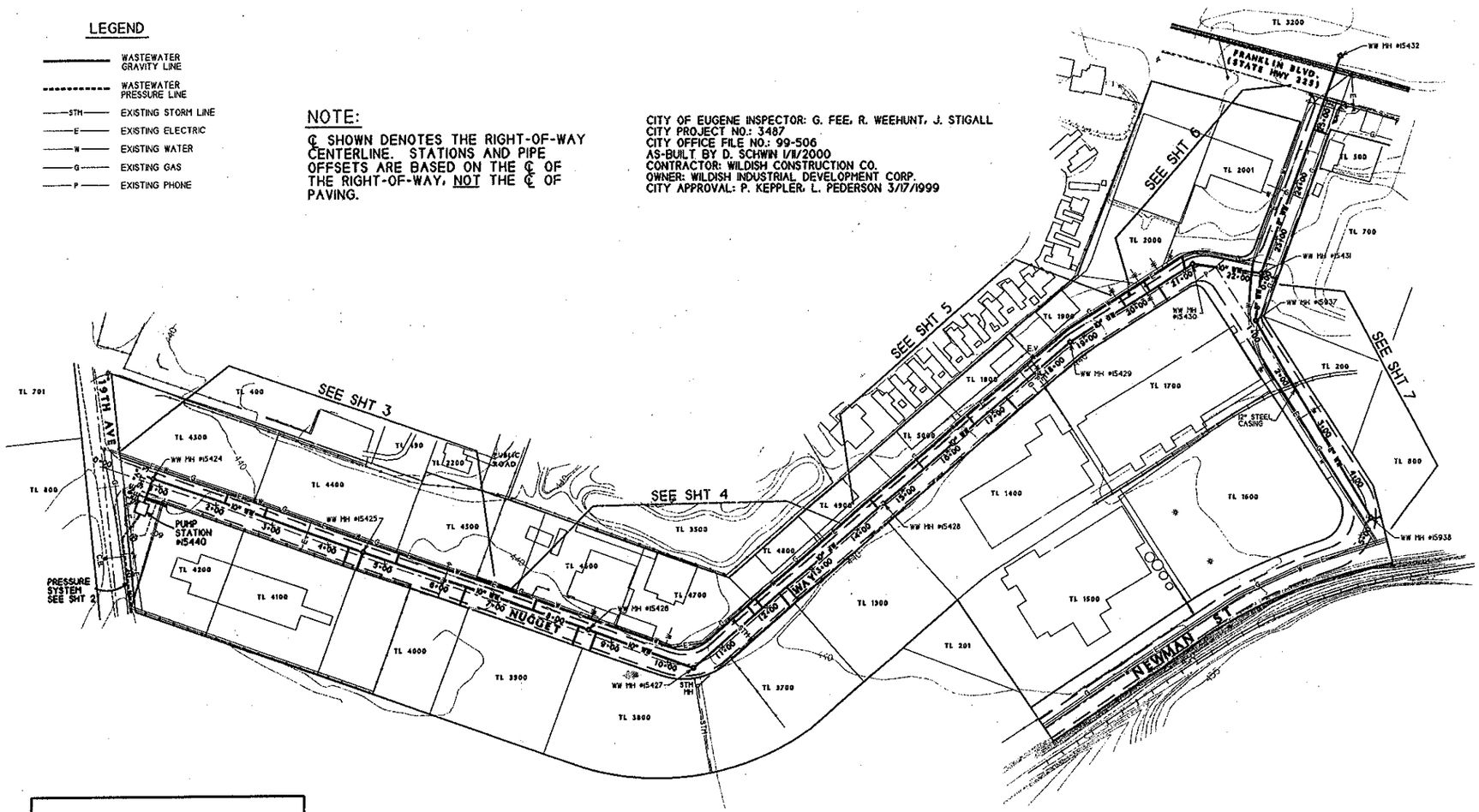

GENERAL NOTES

1. CONSTRUCTION SHALL CONFORM TO THE 1990 STANDARD SPECIFICATIONS FOR PUBLIC WORKS CONSTRUCTION PUBLISHED BY THE OREGON CHAPTER OF APWA (AMENDED IN 1996), AND THE CITY OF EUGENE AMENDMENT #4.
2. ITEMS OF WORK NOT SHOWN ON THIS PLAN BUT NECESSARY FOR THE SUCCESSFUL COMPLETION OF THIS PROJECT MAY BE REQUIRED BY THE CITY.
3. THE CONTRACTOR SHALL SUBMIT A TRAFFIC CONTROL PLAN AND SECURE APPROVAL OF THE PLAN FROM THE CITY AT LEAST FIVE (5) WORKING DAYS PRIOR TO STARTING WORK.
4. THE CONTRACTOR SHALL NOT PERFORM WORK WITHOUT CITY INSPECTIONS WHERE INSPECTIONS ARE REQUIRED BY THE SPECIFICATIONS.
5. BEFORE BACK-FILLING THE END OF A MAINLINE PIPE NOT ENDING AT A MANHOLE OR CLEANOUT, THE CONTRACTOR SHALL PERFORM THE T.V. INSPECTION AS REQUIRED BY THE STANDARD SPECIFICATIONS AND ALLOW THE CONSULTING ENGINEER TO DETERMINE THE EXACT LOCATION AND ELEVATION OF THE END OF THE PIPE.
6. TRACER WIRE BOXES SHALL BE A STANDARD 6" CLEANOUT RING AND COVER. THE COVER SHALL BE PERMANENTLY MARKED WITH THE WORD TRACER. TRACER WIRE SHALL BE WRAPPED AROND THE TOP OF THE RISER PIPE INSIDE OF THE CLEANOUT FRAME AND COVER AND TRACER WIRE BOX, LEAVING 18" OF FREE WIRE.
7. TRACER WIRE SHALL EXTEND A MINIMUM OF 18" INTO ALL JUNCTION BOXES, VALVE VAULTS, ETC.
8. ASPHALT REPLACEMENT AT TRENCHING SHALL BE FORMULATED FOR THIS PROJECT IN ACCORDANCE WITH THE MARSHALL METHOD FOR STREETS CARRYING MEDIUM TRAFFIC (50 BLOW) AS FULLY DESCRIBED IN SECTION 211.2.08 OF THE 1990 APWA STANDARD SPECIFICATIONS FOR PUBLIC WORKS CONSTRUCTION (AMENDED IN 1996). FINAL DEPTH SHALL MATCH EXISTING PAVING.
9. THE CONTRACTOR SHALL NOTIFY LANE COUNTY DEPARTMENT OF PUBLIC WORKS, PERMIT SECTION, 24 HOURS BEFORE BEGINNING WORK IN THE COUNTY RIGHT-OF-WAY.
10. THE CONTRACTOR SHALL PROTECT THE WORK AREA IN THE COUNTY ROAD IN ACCORDANCE WITH "LANE COUNTY TRAFFIC CONTROL AND SAFETY PROCEDURES."
11. REQUESTS BY THE CONTRACTOR FOR CHANGES TO THE PLANS MUST BE APPROVED BY THE CONSULTING ENGINEER AND THE CITY BEFORE THE CHANGES ARE IMPLEMENTED.
12. OREGON LAW REQUIRES THAT RULES ADOPTED BY THE OREGON UTILITY NOTIFICATION CENTER BE FOLLOWED. THOSE RULES ARE SET FORTH IN OAR 952-001-0010 THROUGH OAR 952-001-0090. THESE RULES MAY BE OBTAINED BY CALLING THE OREGON UTILITY NOTIFICATION CENTER AT (503) 232-1987.
13. DURING CONSTRUCTION, RUNOFF FROM THE SITE SHALL BE CONTROLLED, AND INCREASED SEDIMENTS RESULTING FROM SOIL DISTURBANCES SHALL BE RETAINED ON-SITE. THE CONTRACTOR SHALL PROVIDE TEMPORARY DIVERSIONS, SEDIMENT TRAPS, BARRIERS, CHECK DAMS, OR OTHER METHODS AS NECESSARY TO PREVENT AND/OR MINIMIZE NEGATIVE IMPACTS TO WATER QUALITY AND RELATED NATURAL RESOURCES.
14. PLACEMENT OR STORAGE OF SPOILS FROM TRENCH WORK IS NOT PERMITTED ON HARD SURFACE STREETS WITHIN PUBLIC RIGHTS-OF-WAY. SPOILS STORED IN OTHER RIGHT-OF-WAY AREAS SHALL BE COVERED TO PREVENT EROSION.
15. WASTEWATER LATERALS TO BE LOCATED AS SHOWN UNLESS OTHERWISE DIRECTED IN FIELD.
16. ELEVATIONS ARE BASED ON STATE HIGHWAY DEPARTMENT 1923 BENCHMARK #U226, ELEV = 455.28.

SHEET INDEX

SHT 1	GRAVITY SYSTEM SITE PLAN VICINITY MAP
SHT 2	PRESSURE SYSTEM SITE PLAN
SHT 3	GRAVITY SYSTEM CONST PLAN
SHT 4	GRAVITY SYSTEM CONST PLAN
SHT 5	GRAVITY SYSTEM CONST PLAN
SHT 6	GRAVITY SYSTEM CONST PLAN
SHT 7	GRAVITY SYSTEM CONST PLAN
SHT 8	PRESSURE SYSTEM CONST PLAN THRUST BLOCKING DETAIL
SHT 9	PRESSURE SYSTEM CONST PLAN
SHT 10	PRESSURE SYSTEM CONST PLAN
SHT 11	PRESSURE SYSTEM CONST PLAN
SHT 12	PRESSURE SYSTEM CONST PLAN
SHT 13	PRESSURE SYSTEM CONST PLAN PRESSURE DISCHARGE DETAIL
SHT 14	PUMP STATION DETAILS

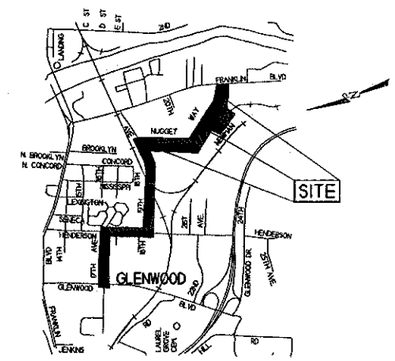

VICINITY MAP
NO SCALE

CITY PROJECT #3487 2344AB01

REGISTERED PROFESSIONAL ENGINEER 6692 THOMAS F. POAGE JULY 13, 1988 EXPIRES 12-31-2000

DESIGNED: MSR	
DRAWN: MSR/DPS	
REVISED:	6/5/96 DPS
	10/8/96 DPS
	2/18/97 DPS
	5/30/97 DPS
	3/5/98 DPS
	3/26/98 DPS
	5/18/98 DPS
	9/4/98 DPS
	3/10/99 DPS
AS-BUILT	1/11/2000 D. SCHWIN

POAGE ENGINEERING & SURVEYING, INC.
P.O. BOX 2527 EUGENE, OR. 97402 485-4505

PROJECT: WILDISH WASTEWATER SYSTEM

LOCATION: GLENWOOD DISTRICT EUGENE, OR.

SCALE: 1" = 100' | DATE: 7/95

JOB NO. 2344 2344AB01 | FLAT FILE NO. 3

SHEET NO. 1 OF 14

P50112

WILDISH WASTEWATER PRESSURE SYSTEM

ASSESSOR'S MAP NO.'S 17-03-34 3 4, 17-03-34 4 3,
18-03-03 1 1, 18-03-03 1 2 & 18-03-03 2

SCALE: 1" = 100'

0 25 50 100 150 200

SCALE IS IN FEET

LEGEND

- WASTEWATER GRAVITY LINE
- WASTEWATER PRESSURE LINE
- WW — EXISTING WASTEWATER PIPE
- STH — EXISTING STORM PIPE
- E — EXISTING ELECTRIC
- W — EXISTING WATER
- G — EXISTING GAS
- P — EXISTING PHONE

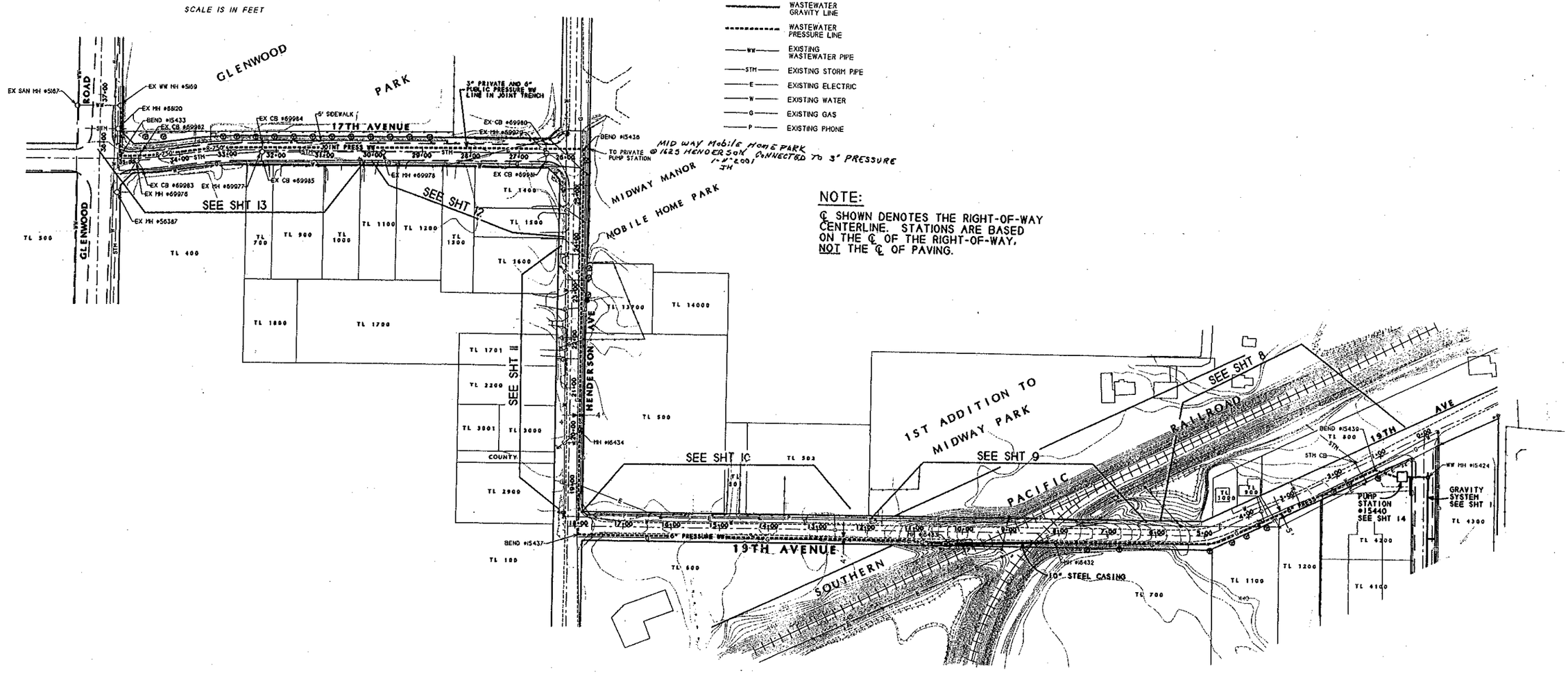

NOTE:

℄ SHOWN DENOTES THE RIGHT-OF-WAY CENTERLINE. STATIONS ARE BASED ON THE ℄ OF THE RIGHT-OF-WAY, NOT THE ℄ OF PAVING.

CITY PROJECT #3487

2344AB02

REGISTERED PROFESSIONAL ENGINEER — THOMAS F. POAGE — EXPIRES 12-31-2000

DESIGNED: DPS	
DRAWN: DPS	
REVISED: 8/8/96 DPS	
10/8/96 DPS	
2/8/97 DPS	
5/30/97 DPS	
2/27/98 DPS	
5/8/98 DPS	
3/10/99 DPS	
AS-BUILT 1/1/2000 D. SCHWN	

POAGE ENGINEERING & SURVEYING, INC.
P.O. BOX 2527 EUGENE, OR. 97402 485-4505

PROJECT: WILDISH WASTEWATER SYSTEM	SCALE: 1" = 100'	DATE: 6/96
LOCATION: GLENWOOD DISTRICT EUGENE, OR.	JOB NO. 2344 2344AB02	FLAT FILE NO. 3
	SHEET NO. 2 OF 14	

P50112

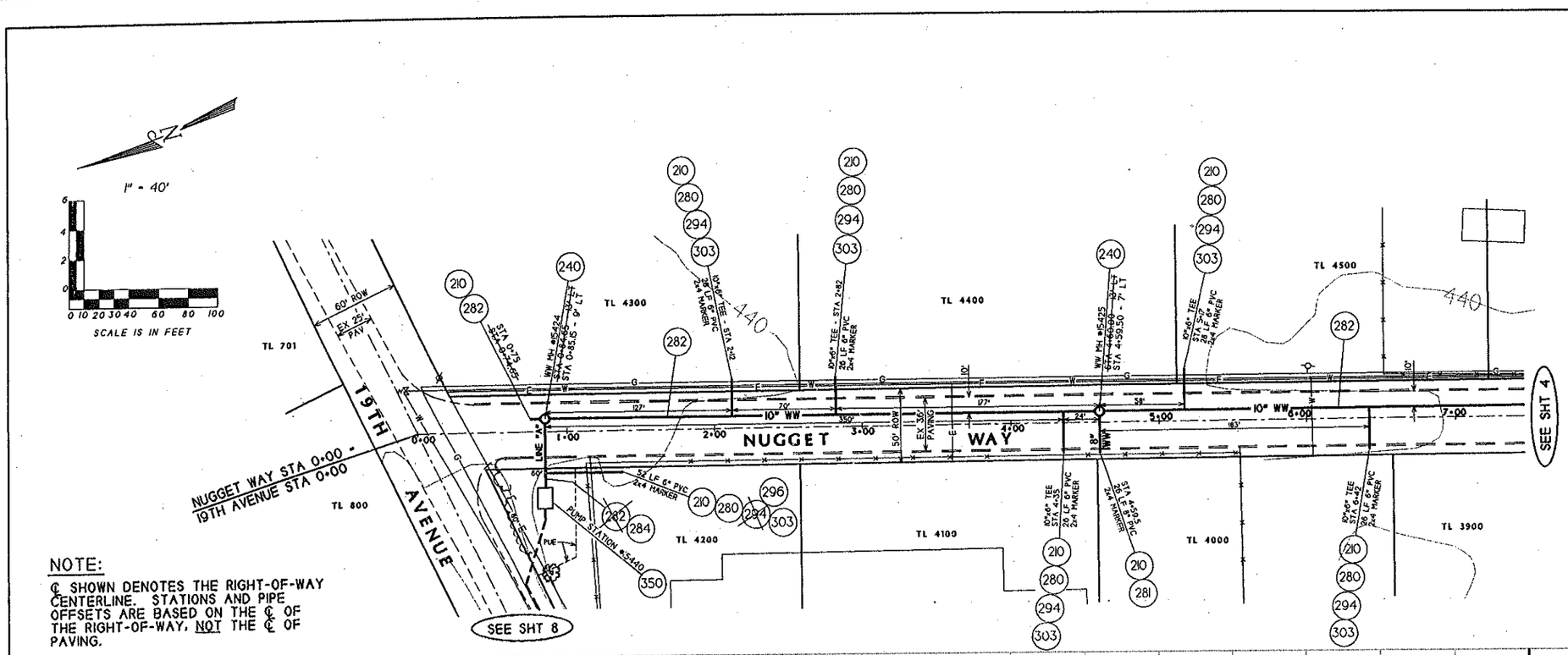

NOTE:

℄ SHOWN DENOTES THE RIGHT-OF-WAY CENTERLINE. STATIONS AND PIPE OFFSETS ARE BASED ON THE ℄ OF THE RIGHT-OF-WAY, NOT THE ℄ OF PAVING.

CONSTRUCTION NOTES

- (210) PLUG END WITH MECHANICAL PLUG
- (240) CONST STANDARD WASTEWATER MANHOLE
- (280) CONST STD 6" PVC WW LINE (ASTM D3034 SDR 35)
- (281) CONST STD 8" PVC WW LINE (ASTM D3034 SDR 35)
- (282) CONST STD 10" PVC WW LINE (ASTM D3034 SDR 35)
- (284) CONST STD 15" PVC WW LINE (ASTM D3034 SDR 35)
- (294) CONST 10" x 6" TEE
- (296) CONST 15" x 6" TEE
- (303) CONST DEEP SERVICE CONNECTION PER CITY OF EUGENE DRAWING #E-49
- (350) CONST PUMP STATION PER DETAIL SHEET 14

GENERAL NOTES

WASTEWATER LATERALS TO BE LOCATED AS SHOWN UNLESS OTHERWISE DIRECTED IN FIELD.

EXISTING UTILITY LOCATIONS ARE APPROXIMATE. CONTRACTOR TO POTHOLE EXISTING UTILITIES AND VERIFY EXACT LOCATIONS PRIOR TO CONSTRUCTION. CONTRACTOR TO NOTIFY ENGINEER IF EXISTING UTILITIES INTERFERE WITH PROPOSED PIPE PLACEMENT.

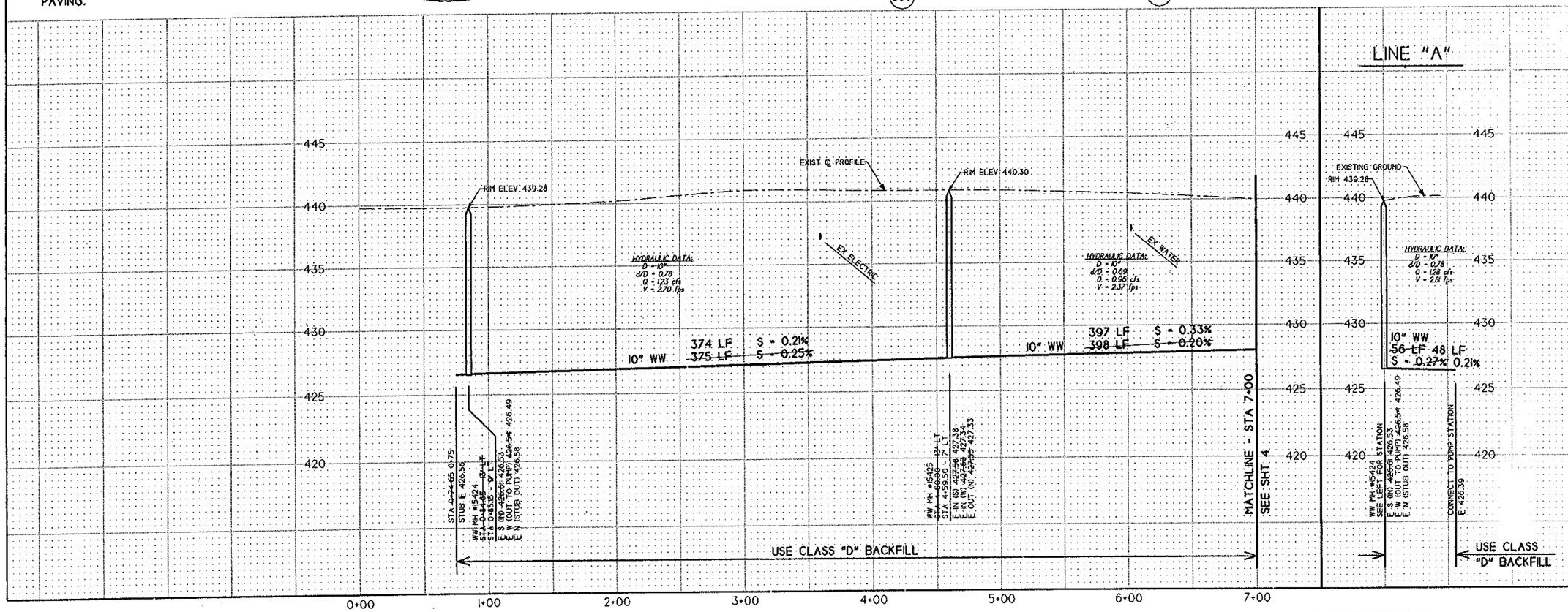

CITY PROJECT #3487

2344AB03

POAGE ENGINEERING & SURVEYING, INC.
P.O. BOX 2527 EUGENE, OR. 97402 485-4505

PROJECT: WILDISH WASTEWATER SYSTEM

LOCATION: GLENWOOD DISTRICT EUGENE, OREGON

DESIGNED: HSR		
DRAWN: HSR		
REVISED: 6/5/96	DPS	
8/8/96	DPS	
10/8/96	DPS	
2/20/97	DPS	
5/30/97	DPS	
3/5/98	DPS	
9/4/98	DPS	
AS-BUILT 11/7/2000	D. SCHWIN	

SCALE: HOR. 1" = 40' VER. 1" = 4'
DATE: 5-96
JOB No: 2344 2344B03B03
PLAT FILE NO: 3
SHEET No. 3 OF 14

EXPIRES: 6-30-2000

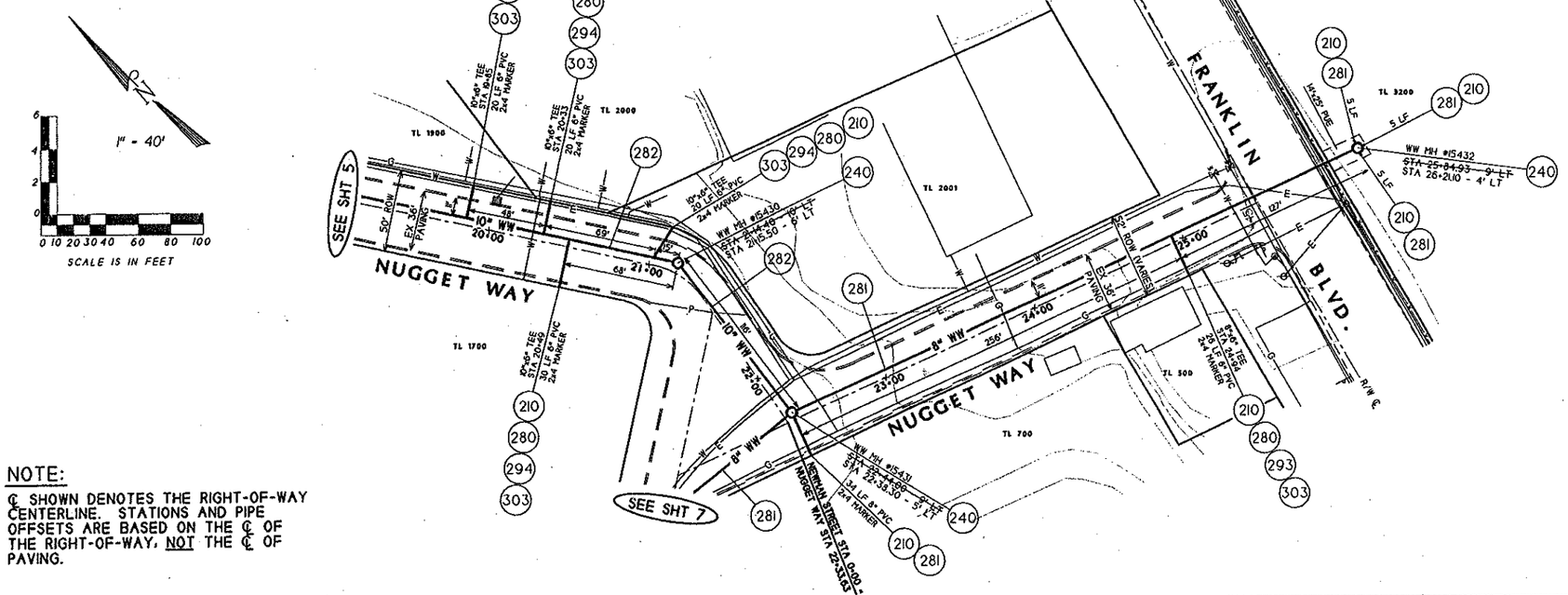

NOTE:

℄ SHOWN DENOTES THE RIGHT-OF-WAY CENTERLINE. STATIONS AND PIPE OFFSETS ARE BASED ON THE ℄ OF THE RIGHT-OF-WAY, NOT THE ℄ OF PAVING.

CONSTRUCTION NOTES

- (210) PLUG END WITH MECHANICAL PLUG
- (240) CONSTRUCT STANDARD WASTEWATER MANHOLE
- (280) CONST STD 6" PVC WW LINE (ASTM D3034 SDR 35)
- (281) CONST STD 8" PVC WW LINE (ASTM D3034 SDR 35)
- (282) CONST STD 10" PVC WW LINE (ASTM D3034 SDR 35)
- (293) CONST 8" x 6" TEE
- (294) CONST 10" x 6" TEE
- (303) CONST DEEP SERVICE CONNECTION PER CITY OF EUGENE DRAWING #E-49

GENERAL NOTES

WASTEWATER LATERALS TO BE LOCATED AS SHOWN UNLESS OTHERWISE DIRECTED IN FIELD.

EXISTING UTILITY LOCATIONS ARE APPROXIMATE. CONTRACTOR TO POTHOLE EXISTING UTILITIES AND VERIFY EXACT LOCATIONS PRIOR TO CONSTRUCTION. CONTRACTOR TO NOTIFY ENGINEER IF EXISTING UTILITIES INTERFERE WITH PROPOSED PIPE PLACEMENT.

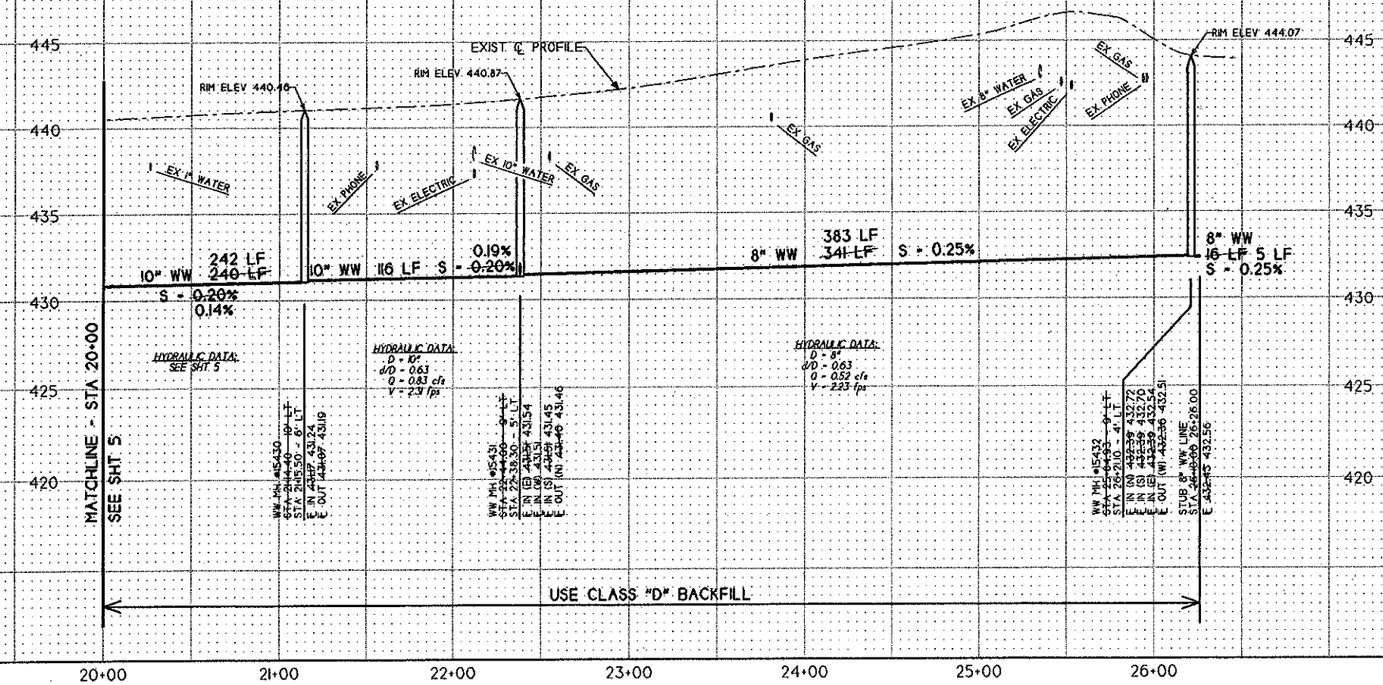

CITY PROJECT #3487

2344AB06

POAGE ENGINEERING & SURVEYING, INC.
P.O. BOX 2527 EUGENE, OR. 97402 485-4505

PROJECT: WILDISH WASTEWATER SYSTEM

LOCATION: GLENWOOD DISTRICT EUGENE, OREGON

DESIGNED: HSR
DRAWN: HSR
REVISED: 6/5/96 DPS; 10/8/96 DPS; 2/20/97 DPS; 5/30/97 DPS; 3/5/98 DPS; 5/18/98 DPS; 1/7/00 DPS; 1/8/2000 D. SCHWIN

SCALE: HOR. 1" = 40' VER. 1" = 4'
DATE: 5-96
JOB No: 2344 2344AB06
PLAT FILE NO: 3
SHEET No. 6 OF 14

REGISTERED PROFESSIONAL ENGINEER 6182 THOMAS F. POAGE

EXPIRES: 12-31-2000

AS-BUILT 1/7/2000 D. SCHWIN

P50112

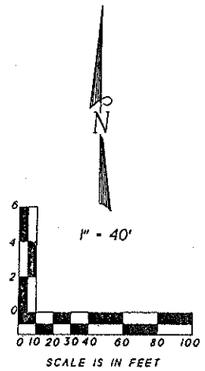

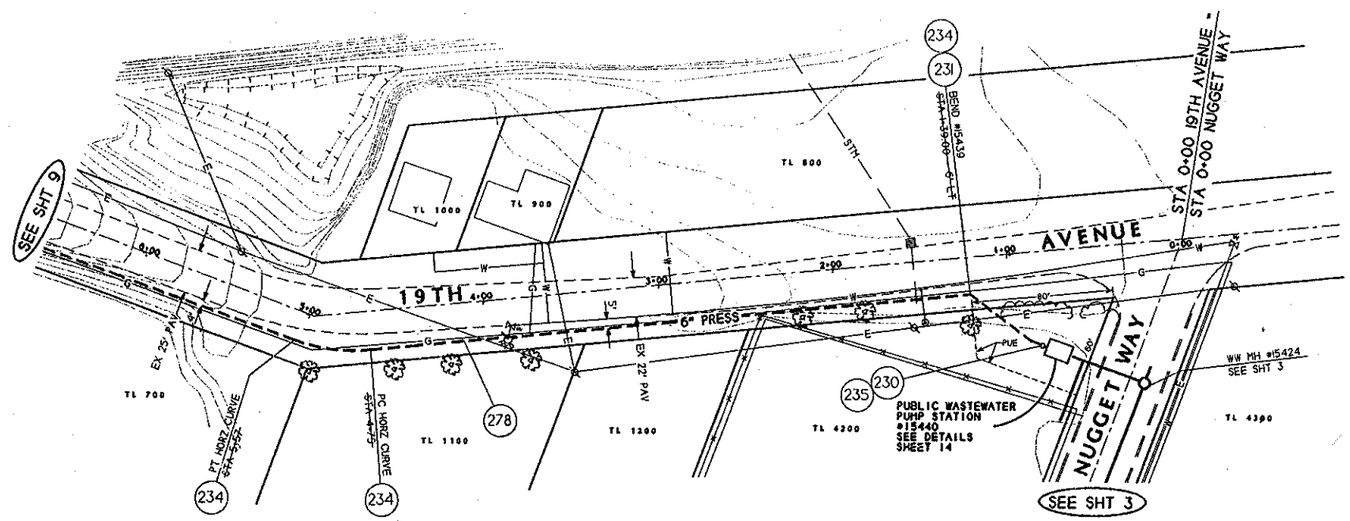

NOTE:

℄ SHOWN DENOTES THE RIGHT-OF-WAY CENTERLINE. STATIONS AND PIPE OFFSETS ARE BASED ON THE ℄ OF THE RIGHT-OF-WAY, NOT THE ℄ OF PAVING.

CONSTRUCTION NOTES

- (230) CONSTRUCT 22 1/2° BELL x BELL BEND (THRUST BLOCKING PER DETAIL THIS SHEET)
- (231) CONSTRUCT 45° BELL x BELL BEND (THRUST BLOCKING PER DETAIL THIS SHEET)
- (234) CONSTRUCT STD TRACER WIRE BOX AT ANGLE POINT OR POINT OF CURVATURE
- (235) CONSTRUCT SEWAGE AIR/VACUUM RELEASE VALVE VAULT PER DETAIL SHEET 14
- (278) CONSTRUCT PUBLIC 6" PVC SCH 40 WW LINE

GENERAL NOTES

CONTRACTOR SHALL MAINTAIN A MINIMUM OF 3'-0" OF COVER OVER ALL PRESSURE LINES. IF 3'-0" OF COVER CANNOT BE ACHIEVED, A CONCRETE CAP SHALL BE REQUIRED.

EXISTING UTILITY LOCATIONS ARE APPROXIMATE. CONTRACTOR TO POTHOLE EXISTING UTILITIES AND VERIFY EXACT LOCATIONS PRIOR TO CONSTRUCTION. CONTRACTOR TO NOTIFY ENGINEER IF EXISTING UTILITIES INTERFERE WITH PROPOSED PIPE PLACEMENT.

THRUST BLOCKING

FITTING SIZE	(HORIZONTAL) BEARING AREA OF THRUST BLOCKS IN SQUARE FEET: TEE, WYE, DEAD END AND HYDRANT	STRADDLE BLOCK	90° BEND PLUGGED CROSS	TEE PLUGGED ON RUN A-1	TEE PLUGGED ON RUN A-2	45° BEND	22-1/2° BEND	11-1/4° BEND	(VERTICAL) VOLUME OF THRUST BLOCK IN CUBIC YARDS: 90° BEND	45° BEND	22-1/2° BEND	11-1/4° BEND
4	10	16	14	19	14	10	—	—	—	—	—	—
6	21	37	30	43	30	16	10	—	13	—	—	—
8	38	65	53	76	54	29	15	10	23	11	—	—
10	59	102	84	118	84	46	24	12	37	18	—	—
12	85	147	120	170	120	66	34	17	55	28	12	—
14	115	—	163	230	163	89	48	23	75	38	17	—
16	150	261	213	300	213	118	60	30	99	51	23	09
18	190	—	270	380	270	148	76	38	—	—	—	—
20	235	408	333	470	333	181	94	47	—	—	—	—
24	340	588	480	680	480	263	136	68	—	—	—	—

NOTES:

1. ABOVE BEARING AREAS BASED ON TEST PRESSURE OF 150 PSI AND AN ALLOWABLE SOIL BEARING STRESS OF 2000 POUNDS PER SQUARE FOOT. TO COMPUTE BEARING AREAS FOR DIFFERENT TEST PRESSURES AND SOIL BEARING STRESSES USE THE FOLLOWING EQUATION

   BEARING AREA = (TEST PRESSURE / 150) x (2000 / SOIL BEARING STRESS) x (TABLE VALUE)

2. ABOVE VOLUMES BASED ON TEST PRESSURE OF 150 PSI AND THE WEIGHT OF CONCRETE - 4050 POUNDS PER CUBIC YARD. TO COMPUTE FOR DIFFERENT TEST PRESSURES USE THE FOLLOWING EQUATION

   VOLUME = (TEST PRESSURE / 150) x (TABLE VALUE)

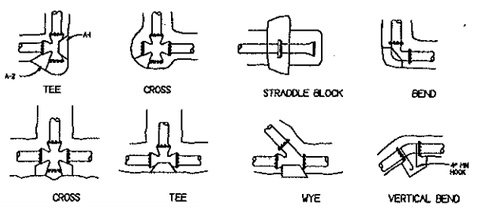

RODS FOR VERTICAL BENDS		
FITTING SIZE	ROD SIZE	EMBEDMENT
12" AND LESS	#6	30"
14"-16"	#8	36"

NOTES:

1. CONCRETE BLOCKING TO BE POURED AGAINST UNDISTURBED EARTH.
2. ALL CONCRETE TO BE CLASS 2400 MINIMUM.
3. INSTALL ISOLATION MATERIAL BETWEEN PIPE AND/OR FITTINGS BEFORE POURING CONCRETE BLOCKING.
4. CONCRETE SHALL BE KEPT CLEAR OF ALL JOINTS AND ACCESSORIES.
5. TIE RODS SHALL BE DEFORMED GALVANIZED COLD ROLLED STEEL, 40000 PSI TENSILE STRENGTH.

THRUST BLOCKING

DATE	DRAWING NO.
MAY 1992	401

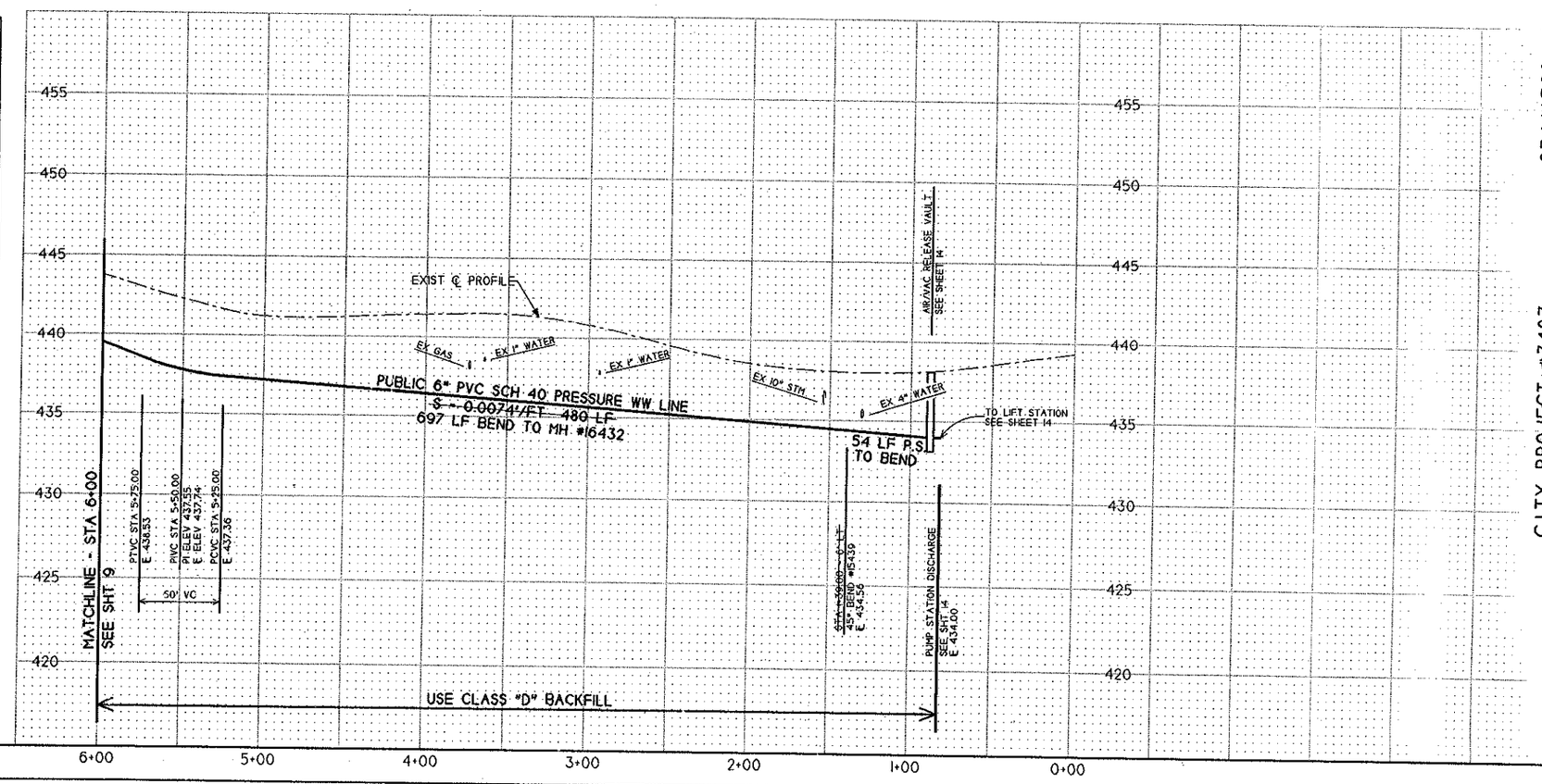

CITY PROJECT #3487

2344AB08

POAGE ENGINEERING & SURVEYING, INC.
P.O. BOX 2527 EUGENE, OR. 97402 485-4505

PROJECT: WILDISH WASTEWATER SYSTEM

LOCATION: GLENWOOD DISTRICT EUGENE, OREGON

DESIGNED: DPS	
DRAWN: DPS	
REVISED: 8/8/96 DPS	
10/8/96 DPS	
2/2/97 DPS	
5/30/97 DPS	
3/5/98 DPS	
5/8/98 DPS	
3/10/99 DPS	
AS-BUILT 1/18/2000 D. SCHAN	

SCALE: HOR. 1" = 40' VER. 1" = 4' DATE: 6-96

JOB No: 2344 2344ABGLGD FILAT FILE NO: 3

SHEET No. 8 OF 14

REGISTERED PROFESSIONAL ENGINEER 6192 THOMAS F. POAGE

EXPIRES: 12-31-2000

P50112

PUMP STATION/PRESSURE SYSTEM DETAIL SHEET

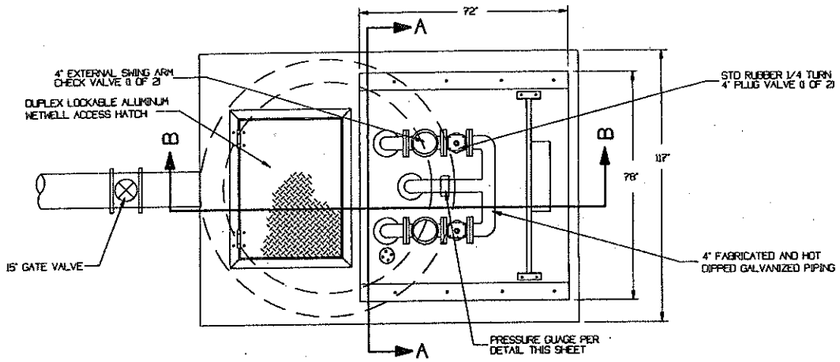

PLAN VIEW
NO SCALE

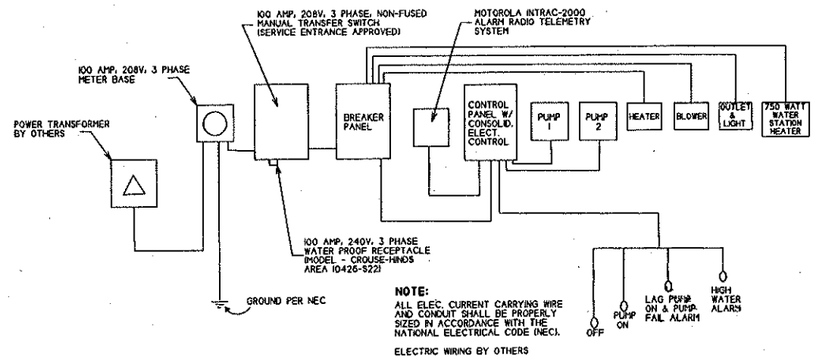

NOTE:
ALL ELEC. CURRENT CARRYING WIRE AND CONDUIT SHALL BE PROPERLY SIZED IN ACCORDANCE WITH THE NATIONAL ELECTRICAL CODE (NEC).

ELECTRIC WIRING BY OTHERS

ELECTRICAL DIAGRAM

DESIGN DATA

PUMP STATION

Station Type	Located on the southwest corner of Nugget Way and 19th Avenue Hydronix Model 435, side mounted, duplex submersible
Pump Type	Constant speed, non-clog, 1750 RPM w/ 10" dia. impeller
Capacity	600 GPM @ 90 Ft TDH
Pump HP	20 HP
Level Control Type	Free hanging, externally weighted mercury level sensors with electrical interlocks
Overflow Point	Wastewater manhole near intersection of 19th Street and Nugget Way - Overflow elevation = 439.50
Overflow Discharge	Roadside ditch on 19th Street
Avg. Time to Overflow	2.8 hours @ 194 GPM (Design average flow at buildout)
Auxiliary Power Type	Portable generator (supplied by City of Eugene Public Works)
Output	100 amp, 208 volt
Transfer Switch	Manual
Alarm Telemetry Type	Motorola Intrac 2000 radio telemetry system
EPA Reliability Class	1

FORCE MAIN

Length, type	3575 Feet, 6" Sch 40 PVC
Profile	Varies, high point at 443.62' 670 LF from pumps
Discharge Manhole	17th & Glenwood Ave.
Air - Vacuum Release Valves	Three total located at high points along pressure line
Average Detention	29-55 minutes (initial), 11-24 minutes (at buildout)
Sulfide Control System	None proposed, high flows limit detention time

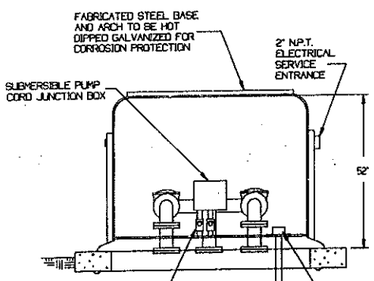

SECTION A-A
NO SCALE

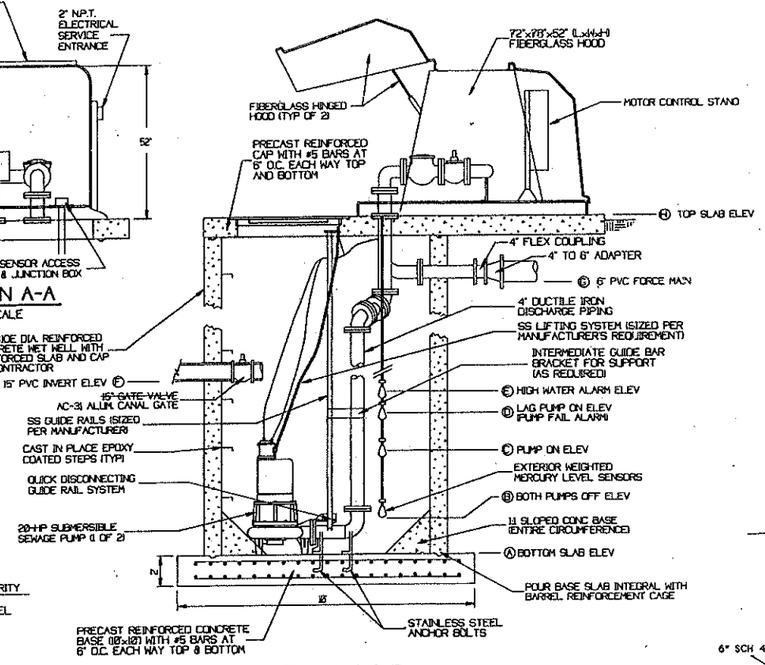

SECTION B-B
NO SCALE

ACCESSORIES NOT SHOWN FOR CLARITY

- 4 CIRCUIT LIGHTING PANEL
- CONVENIENCE OUTLET
- 60 WATT DROP LIGHT
- 1300 WATT HEATER WITH THERMOSTAT
- BLOWER WITH THERMOSTAT

STATION	G.P.M.	T.D.H.	H.P.	R.P.M.	PHASE	VOLTS	ELEVATIONS A	B	C	D	E	F	G	H
WILDISH INDUSTRIAL PARK	600	90	20	1750	3	208	419.50	421.00	425.00	425.50	426.00	426.39	434.00	440.00

NOTES

ALL PIPE AND CONDUIT PENETRATIONS SHALL BE SEALED WATERTIGHT WITH RUBBER SEALS (FERNCO OR EQUIV.).

ALL FASTENERS SHALL BE STAINLESS STEEL.

ALL JOINTS BETWEEN CONCRETE WET WELL SECTIONS SHALL BE SEALED WATERTIGHT WITH NON-SHRINK GROUT.

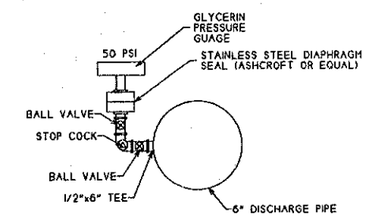

PRESSURE GAUGE DETAIL
NOT TO SCALE

1. CONSTRUCT 96" DIAMETER CONCRETE SANITARY WET WELL PER DETAIL THIS SHEET
2. INSTALL HYDRONIX MODEL 435 SANITARY LIFT STATION PER DETAIL THIS SHEET
3. POWER TRANSFORMER TO BE INSTALLED BY OTHERS (LOCATION MAY VARY FROM THAT SHOWN AS DETERMINED IN THE FIELD)
4. CONSTRUCT WATER STATION WITH BACKFLOW PREVENTER PER DETAIL THIS SHEET
5. WATER METER (EXACT LOCATION TO BE DETERMINED IN FIELD)

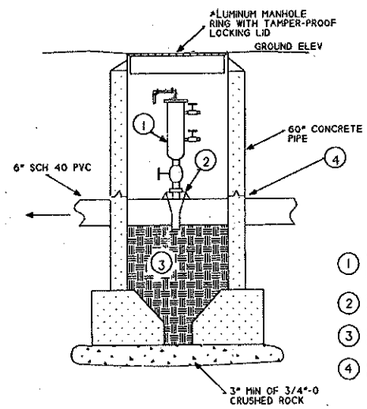

1. VENT-O-MAT MODEL #050RGX1000 AIR/VAC RELEASE VALVE MODIFIED WITH 2" FEMALE NATIONAL PIPE THREAD TOP AND BOTTOM
2. 2" SADDLE TEE ON 6" PRESSURE PIPE TAPPED AT 45° FROM VERTICAL.
3. SUPPORT PIPE ON 1 FOOT MIN. OF 3/4"-0 CRUSHED ROCK.
4. WRAP PIPE WITH 15# ROOFING FELT WHERE PIPE ENTERS AND EXITS VAULT

SEWAGE AIR & VACUUM VALVE VAULT
NOT TO SCALE

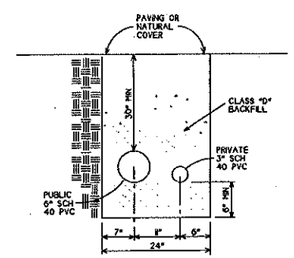

JOINT TRENCH DETAIL
NO SCALE

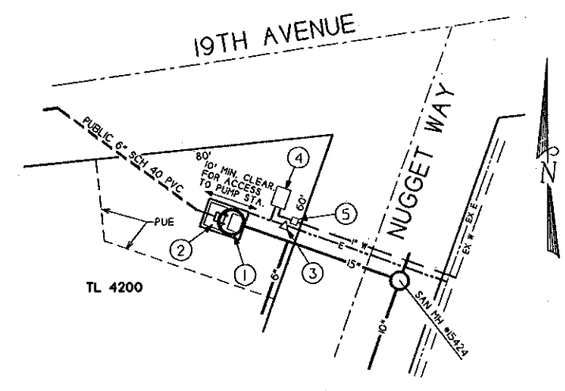

PUMP STATION SITE DETAIL
NOT TO SCALE

CITY PROJECT #3487 2344AB14

REGISTERED PROFESSIONAL ENGINEER 6992 THOMAS E. POAGE EXPIRES: 12-31-2000

DESIGNED: DJB/DPS
DRAWN: DJB/DPS
REVISED: 5/28/97 DPS; 12/10/97 DPS; 1/9/98 DPS; 2/27/98 DPS; 3/26/98 DPS; 5/26/98 DPS; 3/10/99 DPS
AS-BUILT 1/1/2000 D. SCHWIN

POAGE ENGINEERING & SURVEYING, INC.
P.O. BOX 2527 EUGENE, OR. 97402 485-4505

PROJECT: WILDISH WASTEWATER SYSTEM | SCALE: SHOWN | DATE: 12/94

LOCATION: GLENWOOD DISTRICT EUGENE, OR. | JOB NO. 2344 (2344AB14.DGD) | FLAT FILE NO. 3

SHEET NO. 14 OF 14

PS0112